PROJECT UNIT SUMMARY

BUILDING LABEL	FLOORS	UNITS #			NRA TOTAL SF	COMMON USE SF	TOTAL SF
		1 BD	2 BD	3 BD			
APT BLDG	4	20	28	12	53,376	13,581	66,957
		60					

APARTMENT CHART

TYPE OF APARTMENT	1ST FLOOR	2ND FLOOR	3RD FLOOR	4TH FLOOR	TOTAL
ACCESSIBLE UNITS (w/ REMOVEABLE TUB SEAT)	123	219	321		3
HEARING/VISION IMPAIRED & ADAPTABLE UNITS		218		424	2
ALL REMAINING UNITS ADAPTABLE	111,112,113,114, 116,118,121,124, 126,127,128,129, 131	211,212,213,214, 216,217,221,223, 224,226,227, 228,229,231	311,312,313,314, 316,317,318,319, 323,324,326, 327,328,329,331	413,414,416,417, 418,419,421,423, 426,327,428,429, 431	55
TOTAL	14	16	16	14	60

123 – 1BED ACCESSIBLE
219 – 2BED ACCESSIBLE
321 – 3BED ACCESSIBLE
218 – 1BED HEARING & VISION
424 – 2BED HEARING & VISION

NOTE:
UNIT NUMBERS SHOWN ARE FOR CONSTRUCTION PURPOSES ONLY & DO NOT REFLECT FINAL UNIT NUMBERING/LETTERING.

ARCHITECTURAL GENERAL NOTES

1. CONTRACTOR SHALL FIELD VERIFY ALL DIMENSIONS & CONDITIONS.
2. INSTALL MATERIALS AND/OR FINISHES AS INDICATED, IMPLIED OR AS REQUIRED FOR COMPLETE & FINISHED INSTALLATION.
3. ALL WORK SHALL BE IN CONFORMANCE W/ APPLICABLE BUILDING CODES & ORDINANCES.
4. ALL NEW CONSTRUCTION SHALL BE IN CONFORMANCE TO ADA REQUIREMENTS. REFERENCE ADA FOR TYPICAL MINIMUM CLEARANCE REQUIRED.
5. IF THERE IS A DISCREPANCY BETWEEN DRAWINGS AND FIELD CONDITIONS NOTIFY ARCHITECT PRIOR TO PROCEEDING WITH WORK SO THAT ANY ISSUES MAY BE CLARIFIED.
6. DOORS ARE TYPICALLY LOCATED WITH HINGE-SIDE JAMB 4" FROM ADJACENT WALL UNLESS NOTED OTHERWISE OR REQUIRED TO MEET LATCH-SIDE CLEARANCE PER ADA.
7. FEC – INDICATES LOCATION OF RECESSED FIRE EXTINGUISHER CABINET. REF SPECS. AND DETAILS A/B–A2.0 FIRE EXTINGUISHERS SHALL BE INSTALLED & PROVIDED IN ACCORDANCE W/ NFPA 10 & 2021 IBC, SECTION 906. REF. SHEET A2.1
8. MHO – INDICATES DOOR WITH MAGNETIC HOLD OPEN.
9. F.O.S. – INDICATES DIMENSIONS ARE TO THE FACE OF STUD AT THE EXTERIOR/BREEZEWAY WALLS U.N.O.
10. FURNITURE SHOWN IS BY OWNER.
11. (R) INDICATES RADON PIPE LOCATION. REF. MEP DRAWINGS.

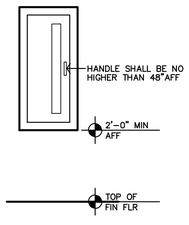

B TYPICAL FEC MOUNTING HGT
3/4"=1'-0"

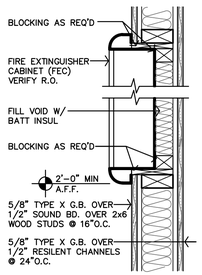

A FIRE EXTINGUISHER CABINET DTL @ 1HR WALL
1 1/2"=1'-0"

EXTERIOR PARTITION SCHEDULE

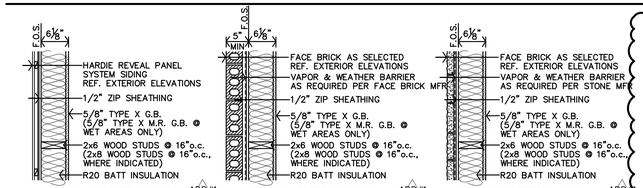

1A TYPICAL EXTERIOR WALL AT SIDING — TYPE 1A
1B TYPICAL EXTERIOR WALL AT BRICK — TYPE 1B
1C TYPICAL EXTERIOR WALL AT BRICK — TYPE 1C
1D TYPICAL EXTERIOR WALL AT STAIRS — TYPE 1D
1E EXTERIOR WALL AT STAIRS @ 10' WITHIN EXT. OPENING — TYPE 1E

WHERE INDICATED ON CFP2: CONSTRUCT PER 2021 IBC TABLE 721.1(2): ITEM NO. 16–1.3

PARTITION NOTES:
1. ALL WALLS TO BE EXTEND TO STRUCTURE, UNLESS NOTED OR DETAILED OTHERWISE
2. LOAD BEARING WALLS & FIRE PARTITIONS SHALL EXTEND TO DECK, SEALED SMOKE TIGHT.
3. REF. SHEET CFP FOR ADDITIONAL CODE INFORMATION
4. REF. STRUCTURAL FOR SHEAR WALL LOCATIONS, MATERIAL & SECTIONS
5. FIRE BLOCKING REQUIRED PER 2021 IBC SEC. 708 & 718. @ 10'–0"O.C. VERT. & HORIZ. AND @ ALL BACK TO BACK ELECTRICAL OUTLETS. (1) LAYER – 5/8" TYPE X G.B. OR 1/2" PLYWOOD TO EXTEND THRU SPACE
6. ALL LISTED ASSEMBLIES ARE PROPRIETARY. ALL SUBSTITUTIONS SHALL FIRST BE SUBMITTED BEFORE INSTALLATION TO ARCHITECT FOR APPROVAL.
7. REF. SHEET A4.11 FOR FIRE PENETRATION REQUIREMENTS @ ALL PLUMBING CHASES AND ALL PENETRATIONS THRU RATED WALLS, FLOOR/CEILING & CEILING/ROOF ASSEMBLIES

INTERIOR PARTITION SCHEDULE

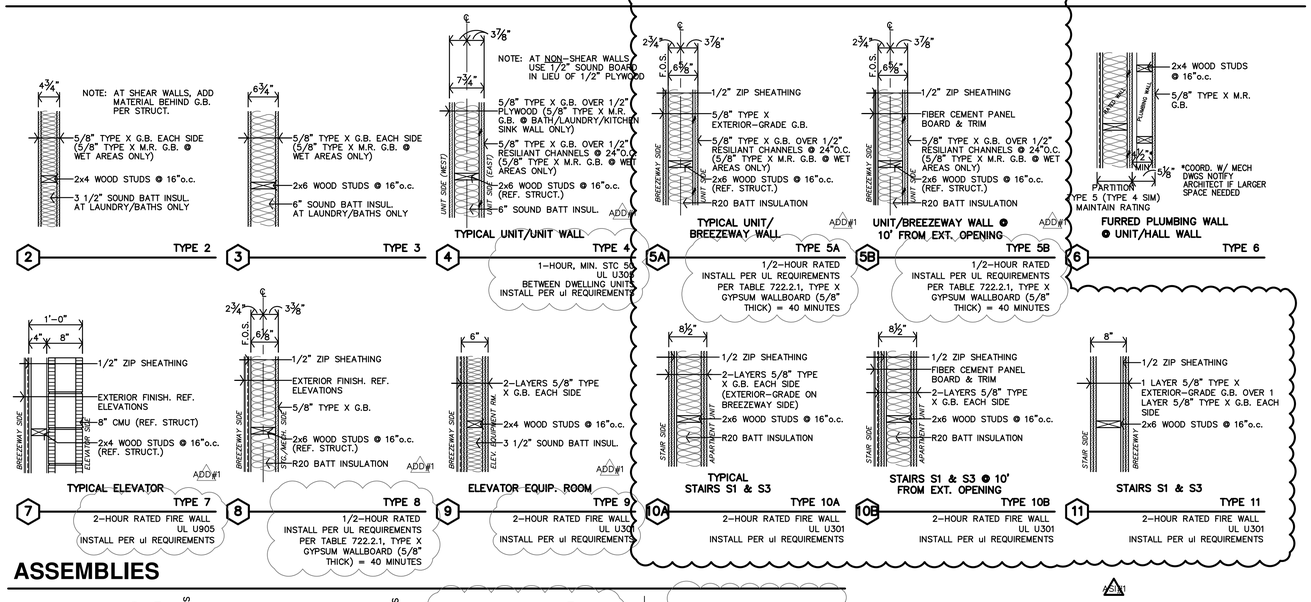

2 TYPE 2
3 TYPE 3
4 TYPICAL UNIT/UNIT WALL — TYPE 4
1–HOUR, MIN. STC 55 UL U305 BETWEEN DWELLING UNITS INSTALL PER ul REQUIREMENTS
5A TYPICAL UNIT/ BREEZEWAY WALL — TYPE 5A
1/2–HOUR RATED INSTALL PER UL REQUIREMENTS PER TABLE 722.2.1, TYPE X GYPSUM WALLBOARD (5/8" THICK) = 40 MINUTES
5B UNIT/BREEZEWAY WALL @ 10' FROM EXT. OPENING — TYPE 5B
1/2–HOUR RATED INSTALL PER UL REQUIREMENTS PER TABLE 722.2.1, TYPE X GYPSUM WALLBOARD (5/8" THICK) = 40 MINUTES
6 FURRED PLUMBING WALL @ UNIT/HALL WALL — TYPE 6

7 TYPICAL ELEVATOR — TYPE 7
2–HOUR RATED FIRE WALL UL U905 INSTALL PER ul REQUIREMENTS
8 TYPE 8
1/2–HOUR RATED INSTALL PER UL REQUIREMENTS PER TABLE 722.2.1, TYPE X GYPSUM WALLBOARD (5/8" THICK) = 40 MINUTES
9 ELEVATOR EQUIP. ROOM — TYPE 9
2–HOUR RATED FIRE WALL UL U301 INSTALL PER ul REQUIREMENTS
10A TYPICAL STAIRS S1 & S3 — TYPE 10A
2–HOUR RATED FIRE WALL UL U301 INSTALL PER ul REQUIREMENTS
10B STAIRS S1 & S3 @ 10' FROM EXT. OPENING — TYPE 10B
2–HOUR RATED FIRE WALL UL U301 INSTALL PER ul REQUIREMENTS
11 STAIRS S1 & S3 — TYPE 11
2–HOUR RATED FIRE WALL UL U301 INSTALL PER ul REQUIREMENTS

ASSEMBLIES

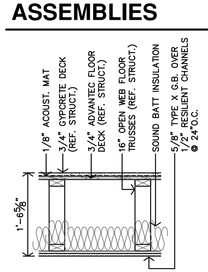

APARTMENTS
FLOOR/CEILING A
1–HOUR RATED (UL L528) INSTALL PER ul REQUIREMENTS

NOTES:
1. DRAFTSTOPPING TO BE INSTALLED PER 2021 IBC SECTION 718.4
2. FIRE BLOCKING REQUIRED PER 2021 IBC SEC. 718.2. (1) LAYER – 5/8" TYPE X G.B. OR 1/2" PLYWOOD TO EXTEND THRU SPACE
3. STC RATING 50 MIN & IIC RATING 50 MIN PER IBC 2021, SEC. 1206.2 & 1206.3

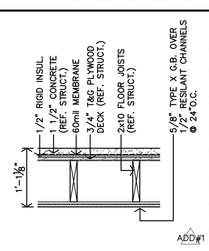

BREEZEWAYS
FLOOR/CEILING B
1–HOUR RATED (UL L501) INSTALL PER ul REQUIREMENTS

NOTES:
1. DRAFTSTOPPING TO BE INSTALLED PER 2021 IBC SECTION 718.3
2. FIRE BLOCKING REQUIRED PER 2021 IBC SEC. 718.2. (1) LAYER – 5/8" TYPE X G.B. OR 1/2" PLYWOOD TO EXTEND THRU SPACE
3. BATT INSULATION & RESILANT CHANNELS ONLY WHERE ASSEMBLY IS OVER/UNDER CONDITIONED SPACES.

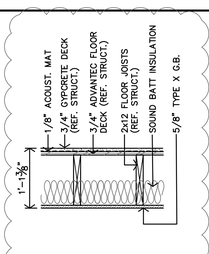

APARTMENT/CLUBHOUSE
FLOOR/CEILING C
1–HOUR RATED (UL L501) INSTALL PER ul REQUIREMENTS

NOTES:
1. DRAFTSTOPPING TO BE INSTALLED PER 2021 IBC SECTION 718.3
2. FIRE BLOCKING REQUIRED PER 2021 IBC SEC. 718.2. (1) LAYER – 5/8" TYPE X G.B. OR 1/2" PLYWOOD TO EXTEND THRU SPACE
3. BATT INSULATION & RESILANT CHANNELS ONLY WHERE ASSEMBLY IS OVER/UNDER CONDITIONED SPACES.

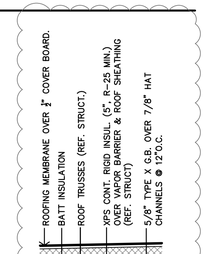

ROOF/CEILING A
1–HOUR RATED (UL P522) INSTALL PER ul REQUIREMENTS

ADD#2

JonesGillamRenz
730 N. Ninth
Salina, KS 67401
1881 Main Street, Suite 301
Kansas City, MO 64108
jgr@jgrarchitects.com
785.827.0386

JGR

THE RESERVES at MAGNOLIA
NEW APARTMENT COMPLEX
DENTON, TEXAS

REGISTERED ARCHITECT — JEFFREY S. GILLAM — 5-17-2023 — 22411 — STATE OF TEXAS

REVISION:	
ADD#1	6–19–2023
ADD#2	9–8–2023
ASI#1	7–22–2024
DATE:	5–17–2023
JOB:	21–3205
SHEET NO.:	

A2.0

COPYRIGHTED ©

Reviewed for Code Compliance
Josh Hamlin
04/30/2025

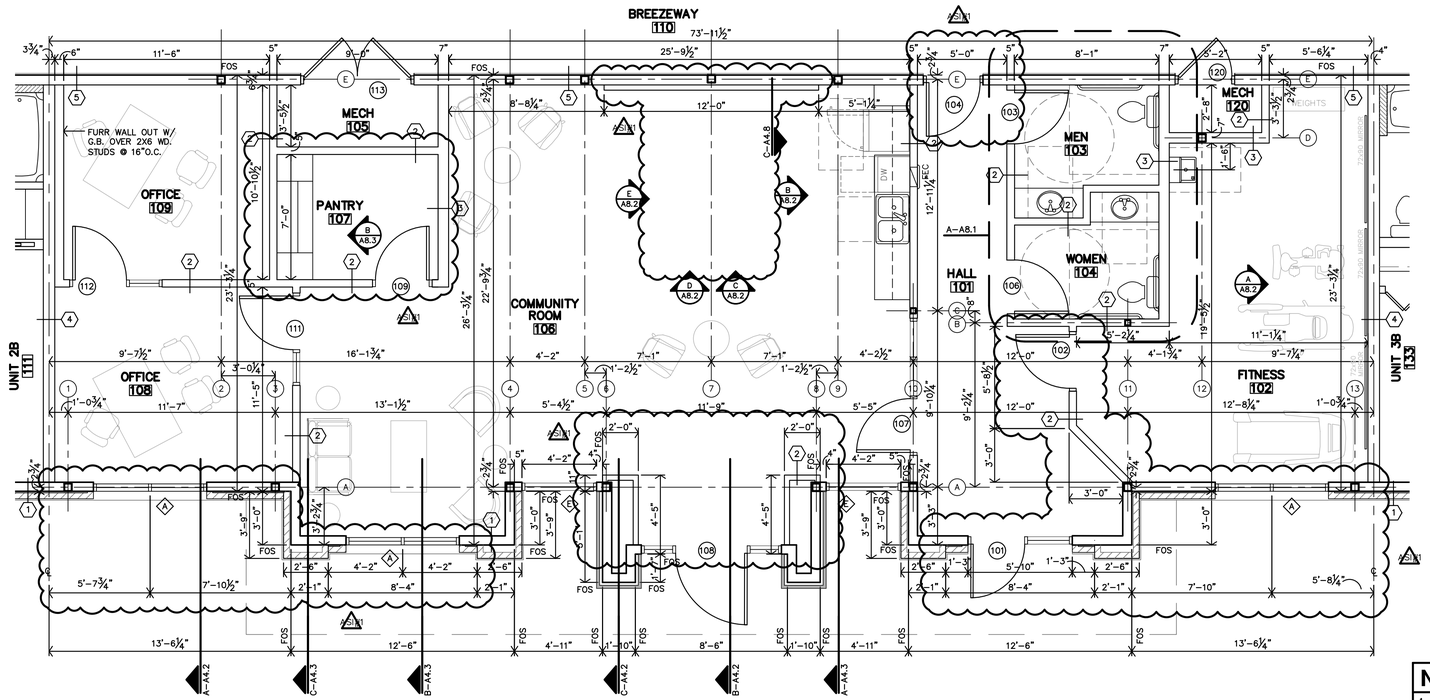

B ENLARGED PARTIAL FLOOR PLAN

1/4"=1'-0"

NOTES

1. REF. SHEET A2.0 FOR GENERAL NOTES.
2. REF. SHEET A2.0 FOR PARTITION SCHEDULES & ASSEMBLIES.
3. FURR WALLS TO HIDE 4" ROOF DRAIN PIPES SHOWN PER PLUMBING SHEETS @ UNIT CLOSETS & CORNER LOCATIONS.

[R] INDICATES RADON PIPE LOCATION. REF. O-A4.7 AND MEP DRAWINGS.

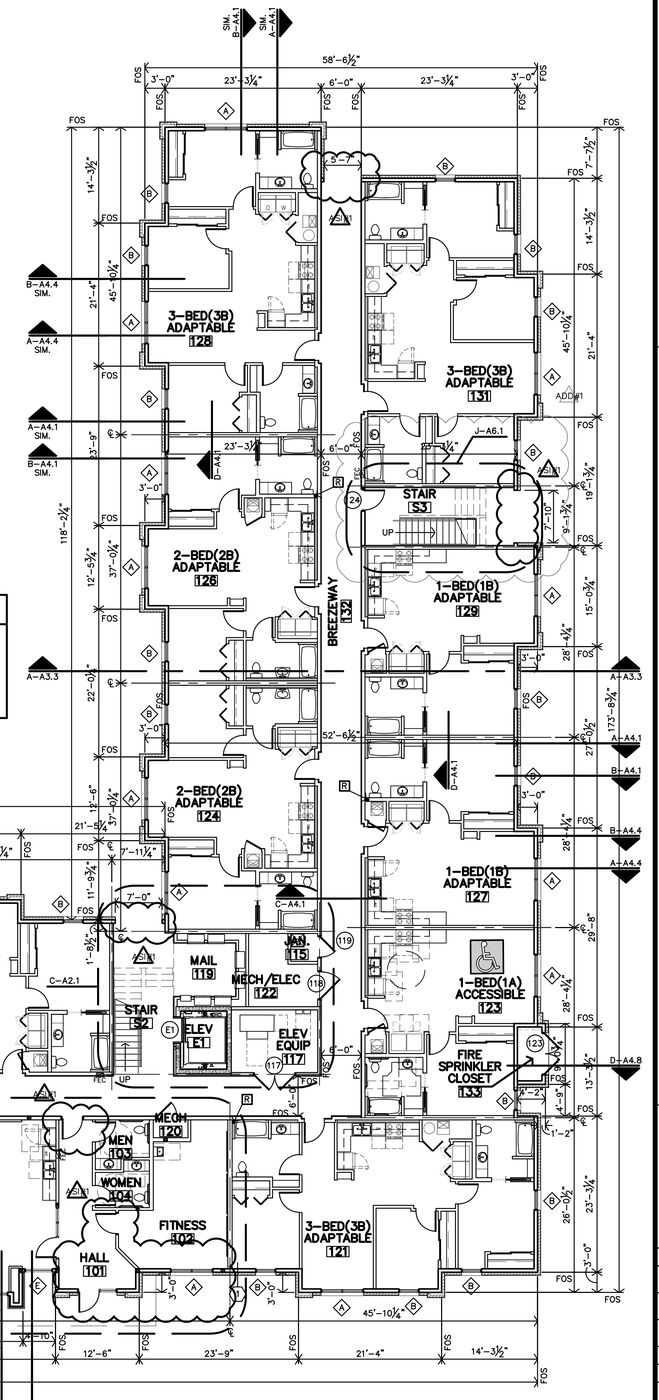

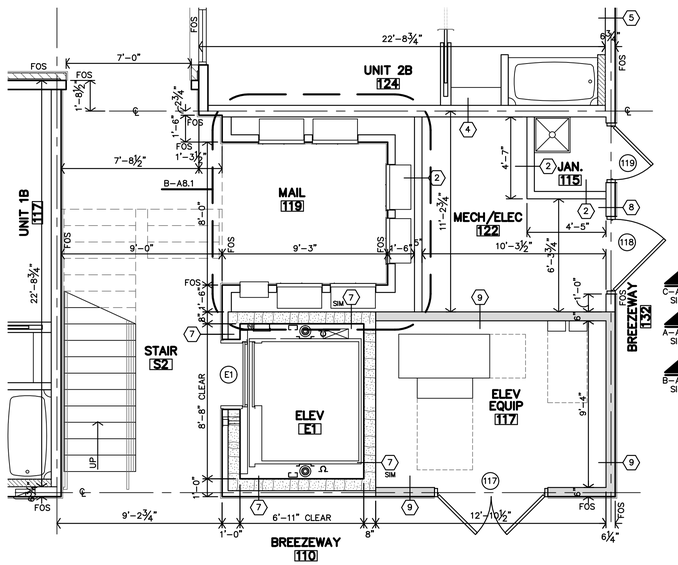

C ENLARGED PARTIAL FLOOR PLAN

1/4"=1'-0"

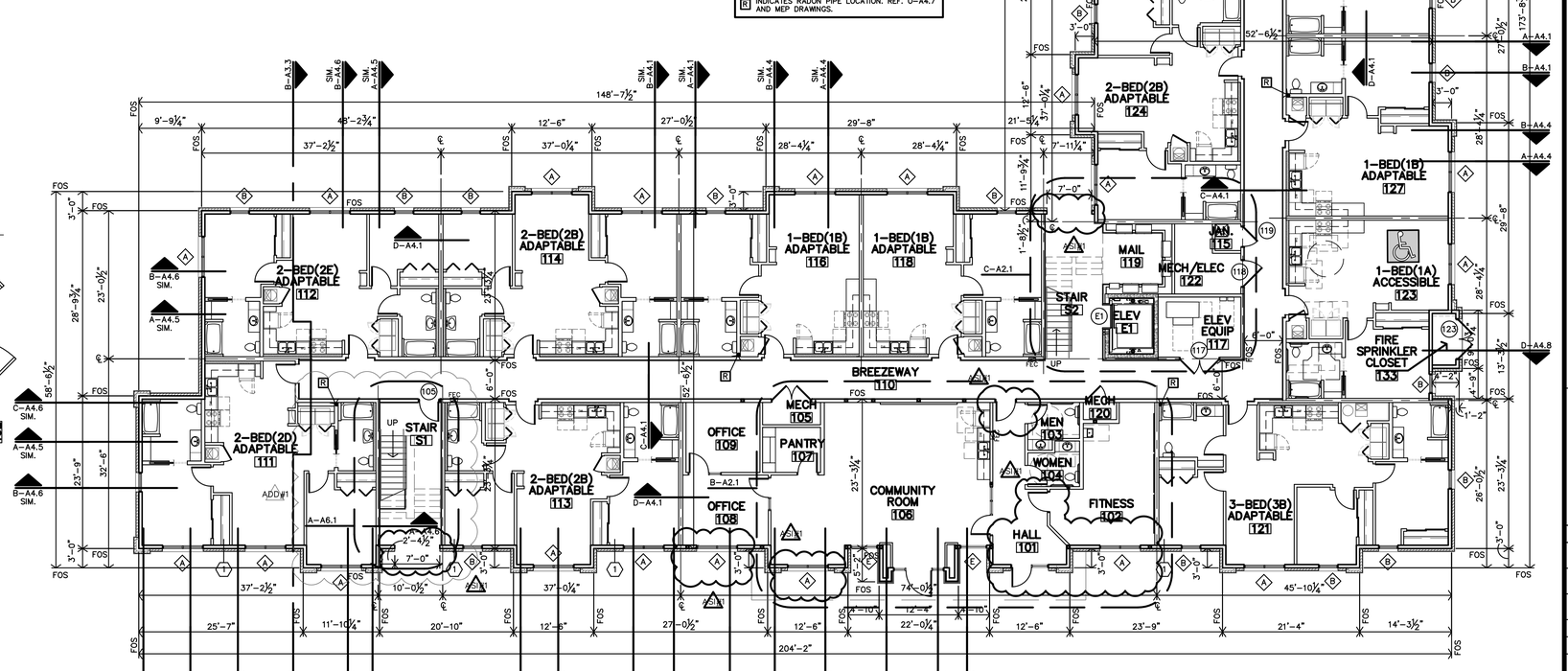

A FIRST FLOOR PLAN

3/32"=1'-0"

Reviewed for Code Compliance
Josh Hamlin
04/30/2025

JonesGillamRenz
730 N. Ninth
Salina, KS 67401
785.827.0386
1881 Main Street, Suite 301
Kansas City, MO 64108
jgr@jgrarchitects.com

THE RESERVES at MAGNOLIA

NEW APARTMENT COMPLEX

DENTON, TEXAS

REGISTERED ARCHITECT
JEFFREY S. GILLAM
5-17-2023
22410
STATE OF TEXAS

REVISION:	
ADD#1	6-19-2023
ASI#1	7-22-2024
DATE:	5-17-2023
JOB:	21-3205
SHEET NO.:	

A2.1

COPYRIGHTED©

DENTON DEVELOPMENT CODE & PLANNED DEVELOPMENT (PD22-0001) DESIGN STANDARDS		
DESCRIPTION	REQUIRED	PROVIDED
MAX BUILDING HIEGHT	50' MAX	49'
SOUTH-FACING FACADE SHALL CONSIST OF 25% WINDOWS AND DOORS	25% MIN.	25%
ALL OTHER FACADES SHALL CONSIST OF 15% WINDOWS AND DOORS	15% MIN.	
EAST FACADE		18%
NORTH FACADE		18%
WEST FACADE		16%
ALL FACADES SHALL CONSIST OF AT LEAST 40% STONE, PRECAST OR BRICK	40% MIN.	
SOUTH FACADE		46%
EAST FACADE		44%
NORTH FACADE		40%
WEST FACADE		43%
AT LEAST 15% OF ALL WINDOWS MUST BE FINISHED WITH A CANOPY OF AWNING	15% MIN.	16%
WALL SCONCES MUST BE INSTALLED ALONG GROUND FLOOR AT REGULAR INTERVALS		YES
GROUND FLOOR MUST BE IDENTIFIABLE FROM THE UPPER FLOORS WITH A HORIZONTAL & DIFFERENTIATING EXTERIOR BUILDING MATERIAL		YES
PRIMARY VERTICAL BUILDING PROJECTIONS MUST HAVE DIFFERENTIATING EXTERIOR BUILDING MATERIAL		YES
PRIMARY ENTRANCE ON THE SOUTH FACADE MUST BE DISTINGUISHED BY A CANOPY OR AWNING		YES
ALL FLAT ROOFS SHALL PROVIDE A DECORATIVE CORNICE		YES

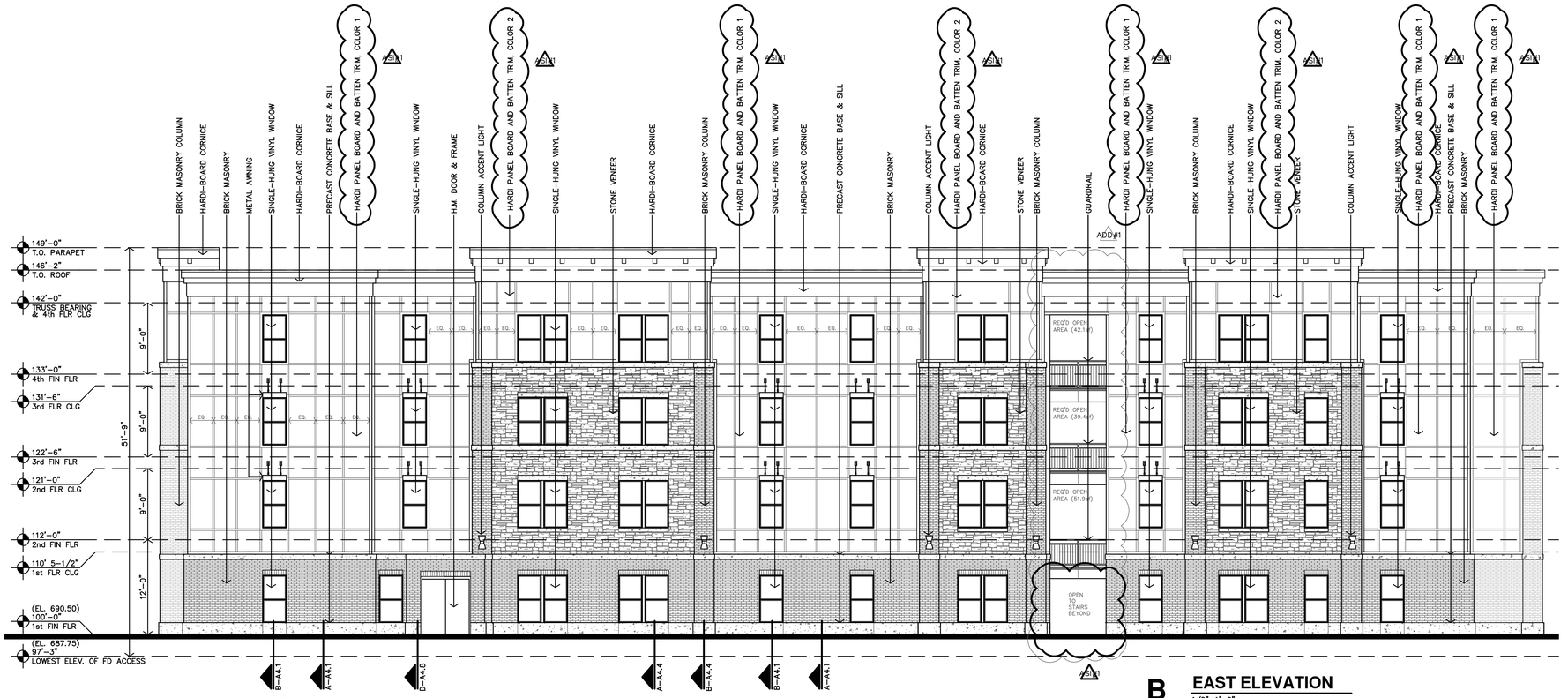

B **EAST ELEVATION**
1/8"=1'-0"

A **SOUTH ELEVATION**
1/8"=1'-0"

Reviewed for Code Compliance
Josh Hamlin
04/30/2025

JonesGillamRenz
730 N. Ninth
Salina, KS 67401
1881 Main Street, Suite 301
Kansas City, MO 64108
785.827.0386
jgr@jgrarchitects.com

THE RESERVES at MAGNOLIA

NEW APARTMENT COMPLEX

DENTON, TEXAS

REGISTERED ARCHITECT
JEFFREY S. GILLAM
5-17-2023
22419
STATE OF TEXAS

REVISION:
ADD#1 6-19-2023
ADD#2 7-17-2024

DATE: 5-17-2023
JOB: 21-3205
SHEET NO.:

A3.1

COPYRIGHTED ©

DENTON DEVELOPMENT CODE & PLANNED DEVELOPMENT (PD22-0001) DESIGN STANDARDS

DESCRIPTION	REQUIRED	PROVIDED
MAX BUILDING HIEGHT	50' MAX	49'
SOUTH-FACING FACADE SHALL CONSIST OF 25% WINDOWS AND DOORS	25% MIN.	25%
ALL OTHER FACADES SHALL CONSIST OF 15% WINDOWS AND DOORS	15% MIN.	
EAST FACADE		18%
NORTH FACADE		18%
WEST FACADE		16%
ALL FACADES SHALL CONSIST OF AT LEAST 40% STONE, PRECAST OR BRICK	40% MIN.	
SOUTH FACADE		46%
EAST FACADE		44%
NORTH FACADE		40%
WEST FACADE		43%
AT LEAST 15% OF ALL WINDOWS MUST BE FINISHED WITH A CANOPY OF AWNING	15% MIN.	16%
WALL SCONCES MUST BE INSTALLED ALONG GROUND FLOOR AT REGULAR INTERVALS		YES
GROUND FLOOR MUST BE IDENTIFIABLE FROM THE UPPER FLOORS WITH A HORIZONTAL & DIFFERENTIATING EXTERIOR BUILDING MATERIAL		YES
PRIMARY VERTICAL BUILDING PROJECTIONS MUST HAVE DIFFERENTIATING EXTERIOR BUILDING MATERIAL		YES
PRIMARY ENTRANCE ON THE SOUTH FACADE MUST BE DISTINGUISHED BY A CANOPY OR AWNING		YES
ALL FLAT ROOFS SHALL PROVIDE A DECORATIVE CORNICE		YES

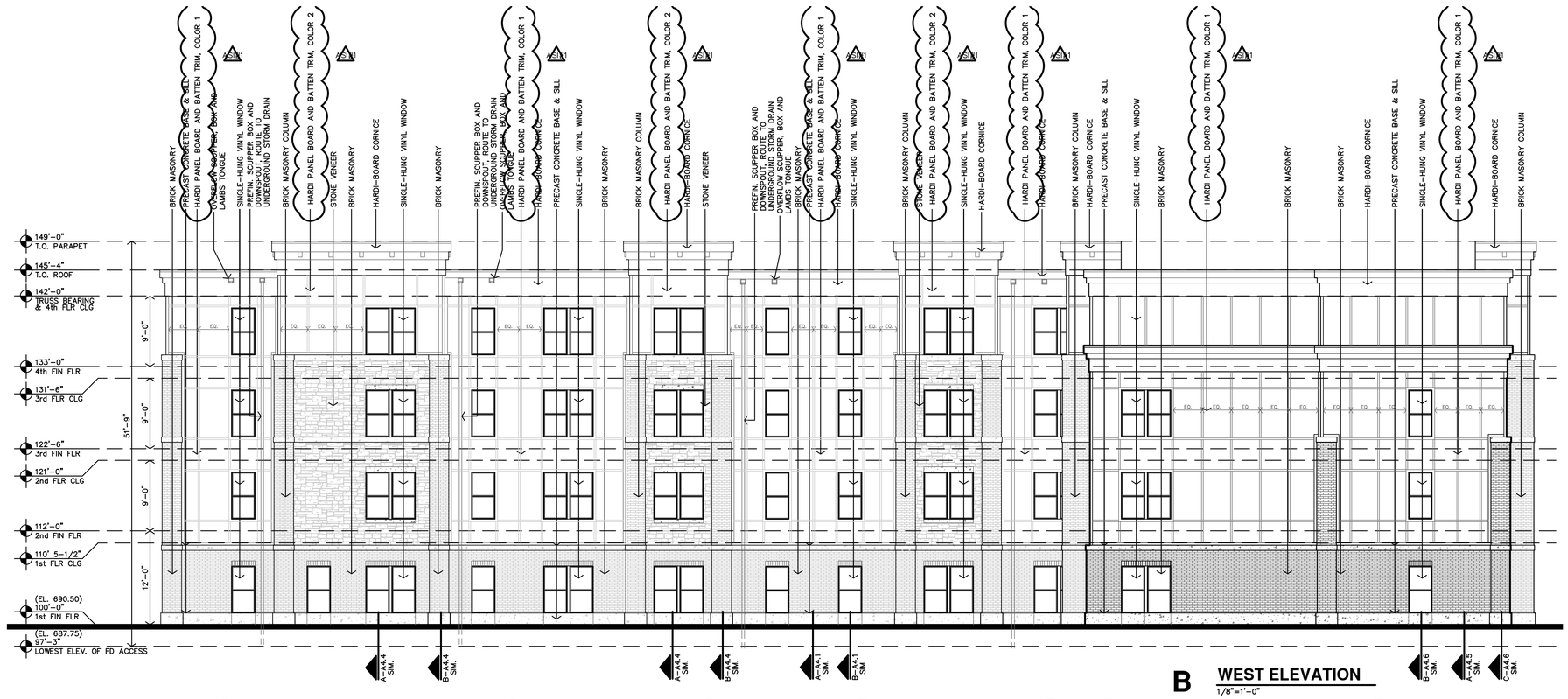

B **WEST ELEVATION**
1/8"=1'-0"

A **NORTH ELEVATION**
1/8"=1'-0"

Reviewed for Code Compliance
Josh Hamlin
04/30/2025

JonesGillamRenz
730 N. Ninth 1881 Main Street, Suite 301
Salina, KS 67401 Kansas City, MO 64108
785.827.0386 jgr@jgrarchitects.com

THE RESERVES at MAGNOLIA

NEW APARTMENT COMPLEX

DENTON, TEXAS

REGISTERED ARCHITECT
STEPHEN S. GILLAM
5-17-2023
STATE OF TEXAS

REVISION:	
1	7-17-2024
DATE:	5-17-2023
JOB:	21-3205
SHEET NO.:	

A3.2

COPYRIGHTED©

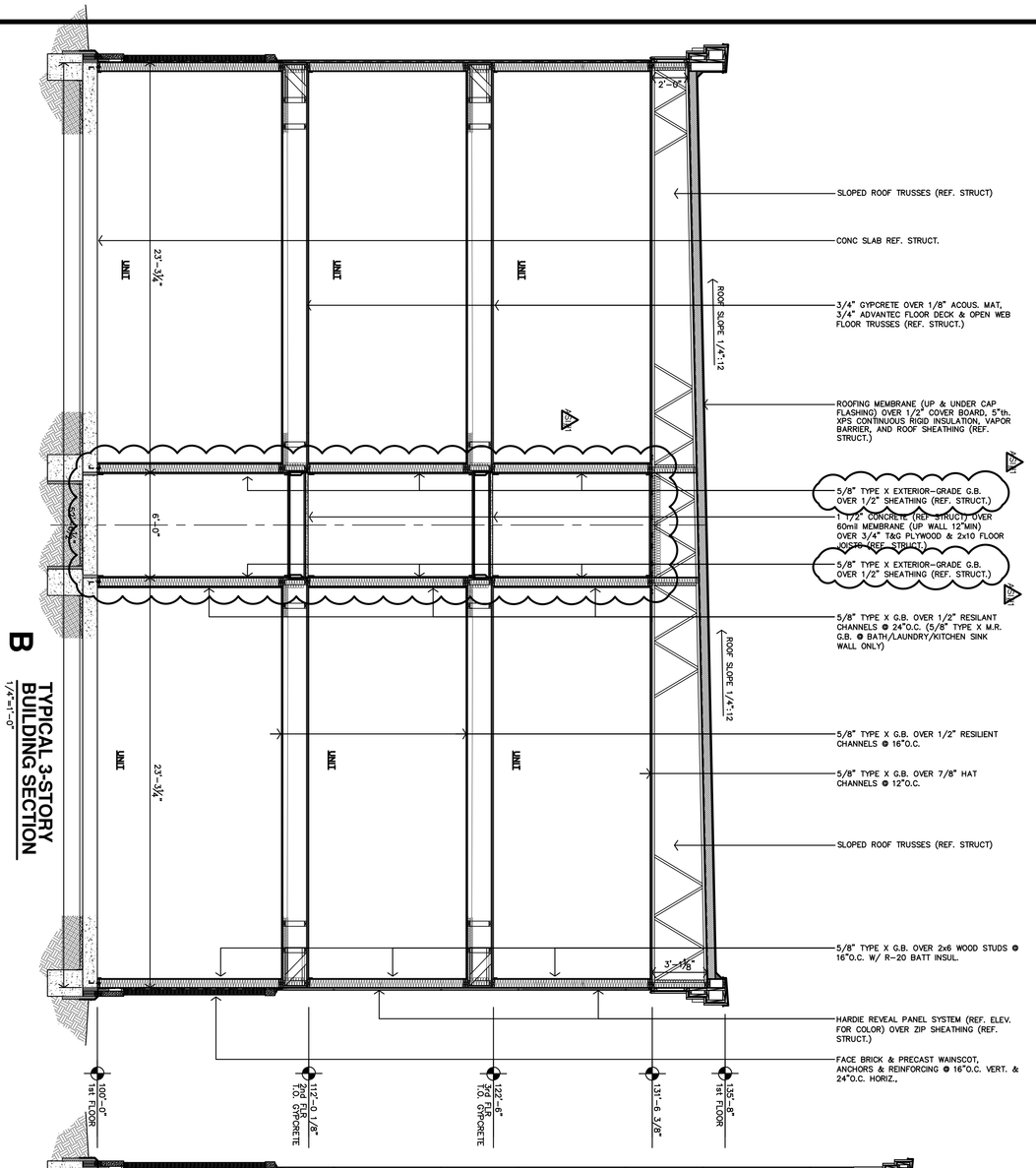

B TYPICAL 3-STORY BUILDING SECTION
1/4"=1'-0"

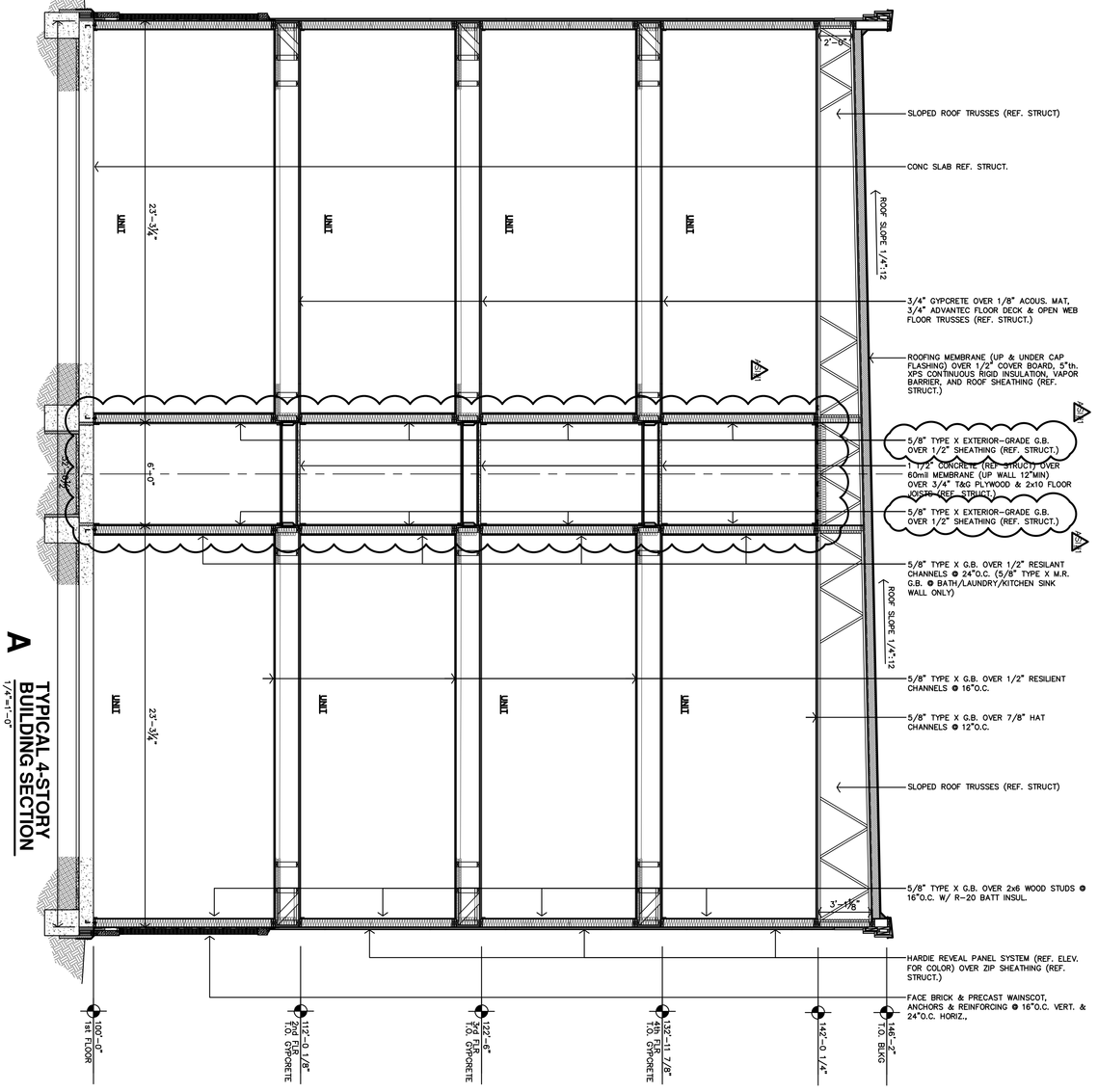

A TYPICAL 4-STORY BUILDING SECTION
1/4"=1'-0"

Reviewed for Code Compliance
Josh Hamlin
04/30/2025

A3.3

JOB:	21-3205
DATE:	5-17-2023
REVISION:	7-22-2024

COPYRIGHTED ©

THE RESERVES at MAGNOLIA

NEW APARTMENT COMPLEX

DENTON, TEXAS

JonesGillamRenz
730 N. Ninth
Salina, KS 67401
785.827.0386
1881 Main Street, Suite 301
Kansas City, MO 64108
jgr@jgrarchitects.com

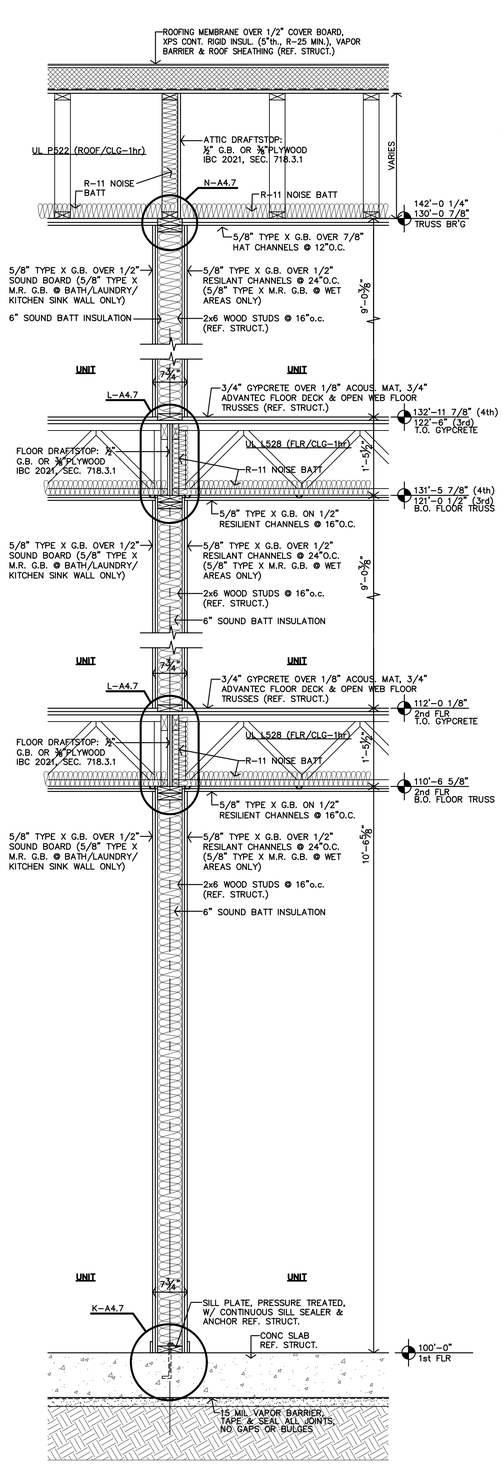

D UNIT/UNIT WALL SECTION

3/4"=1'-0"

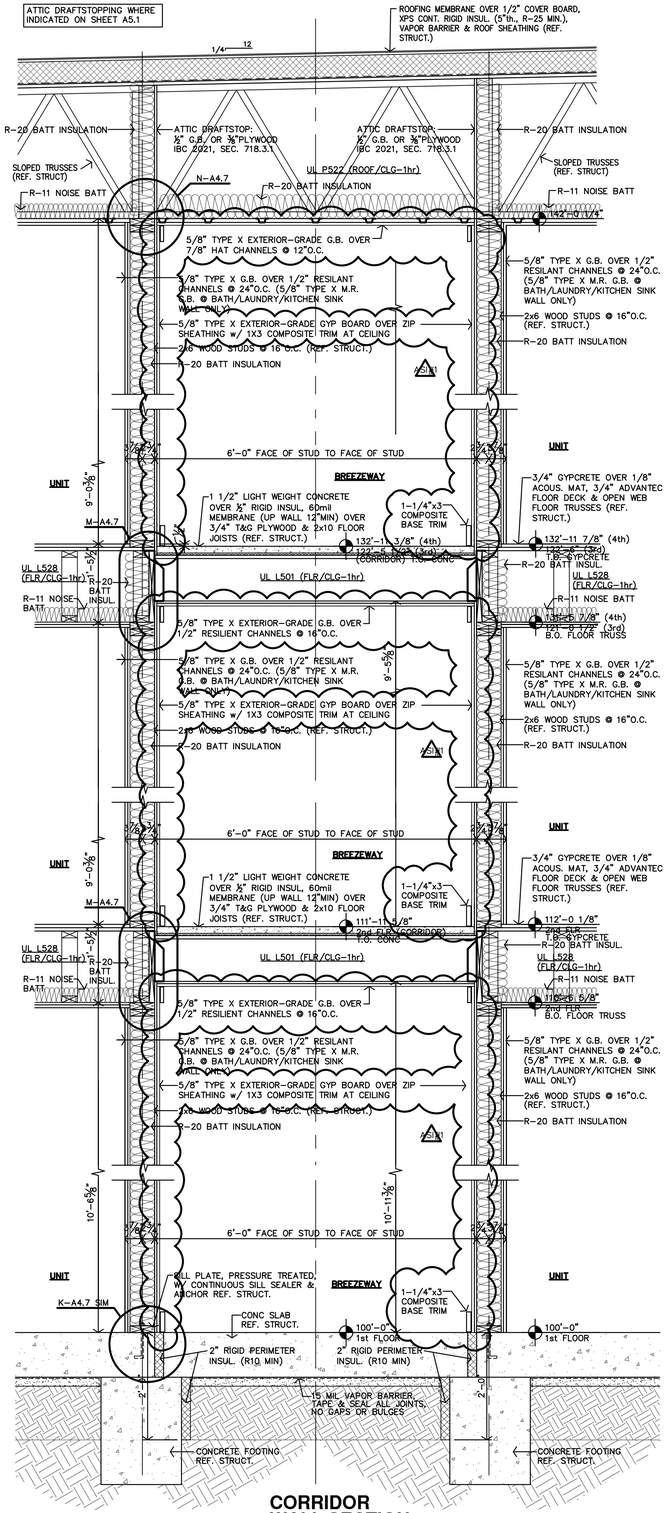

C CORRIDOR WALL SECTION

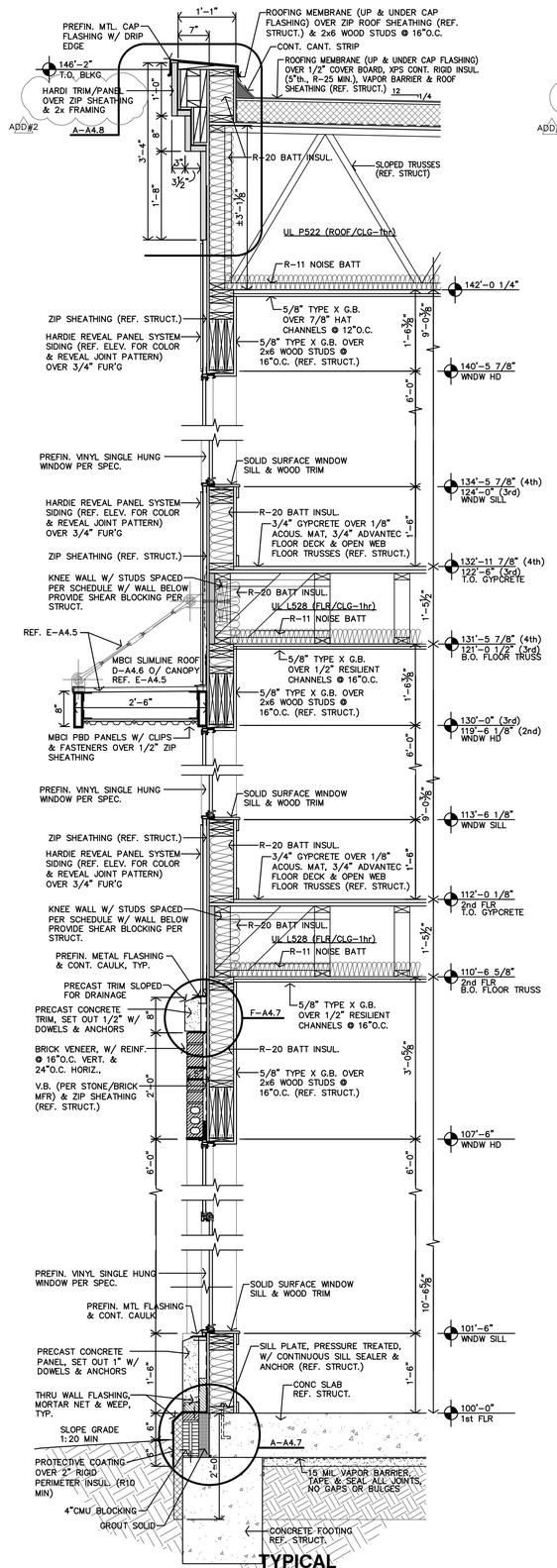

B TYPICAL WALL SECTION

3/4"=1'-0"

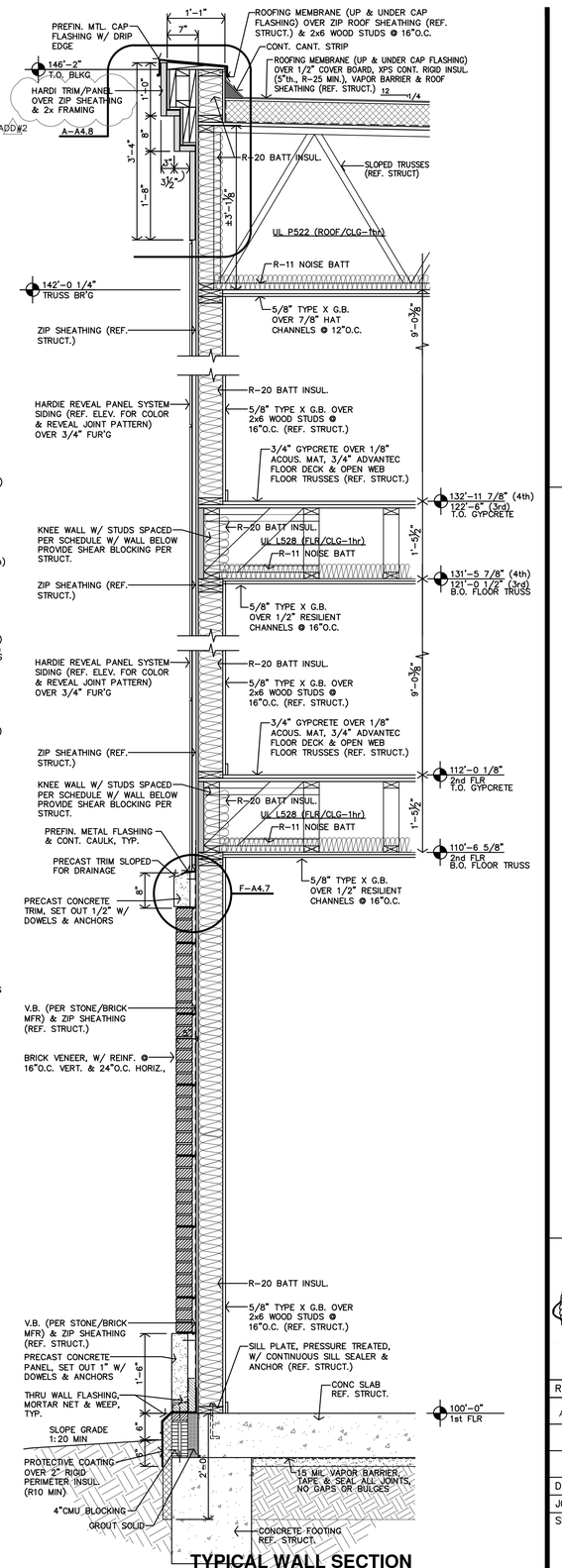

A TYPICAL WALL SECTION HIGH SIDE OF ROOF

3/4"=1'-0"

Reviewed for Code Compliance
Josh Hamlin
04/30/2025

JonesGillamRenz
730 N. Ninth
Salina, KS 67401
1881 Main Street, Suite 301
Kansas City, MO 64108
785.827.0386
jgr@jgrarchitects.com

THE RESERVES at MAGNOLIA

NEW APARTMENT COMPLEX

DENTON, TEXAS

REGISTERED ARCHITECT
STEVEN S GILLAM
5-17-2023
22415
STATE OF TEXAS

REVISION:	
ADDN#2	9-8-2023
ASI#1	7-22-2024
DATE:	5-17-2023
JOB:	21-3205
SHEET NO.:	

A4.1

COPYRIGHTED ©

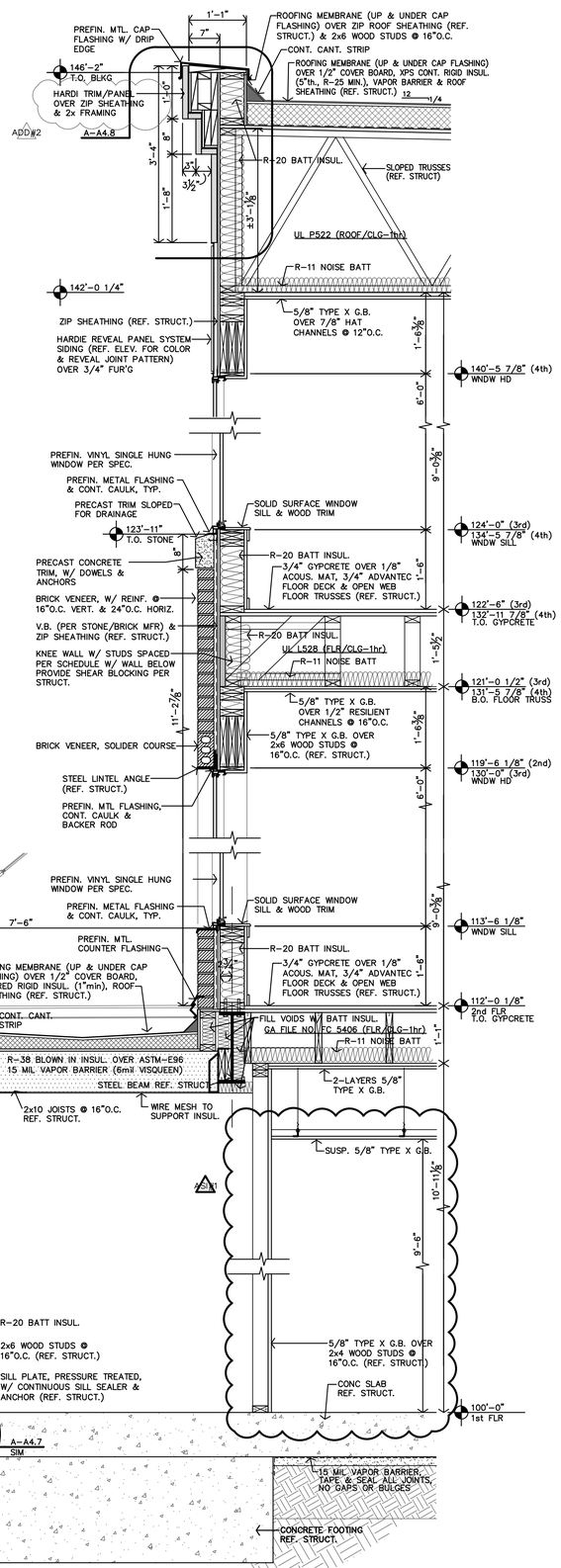

C WALL SECTION
3/4"=1'-0"

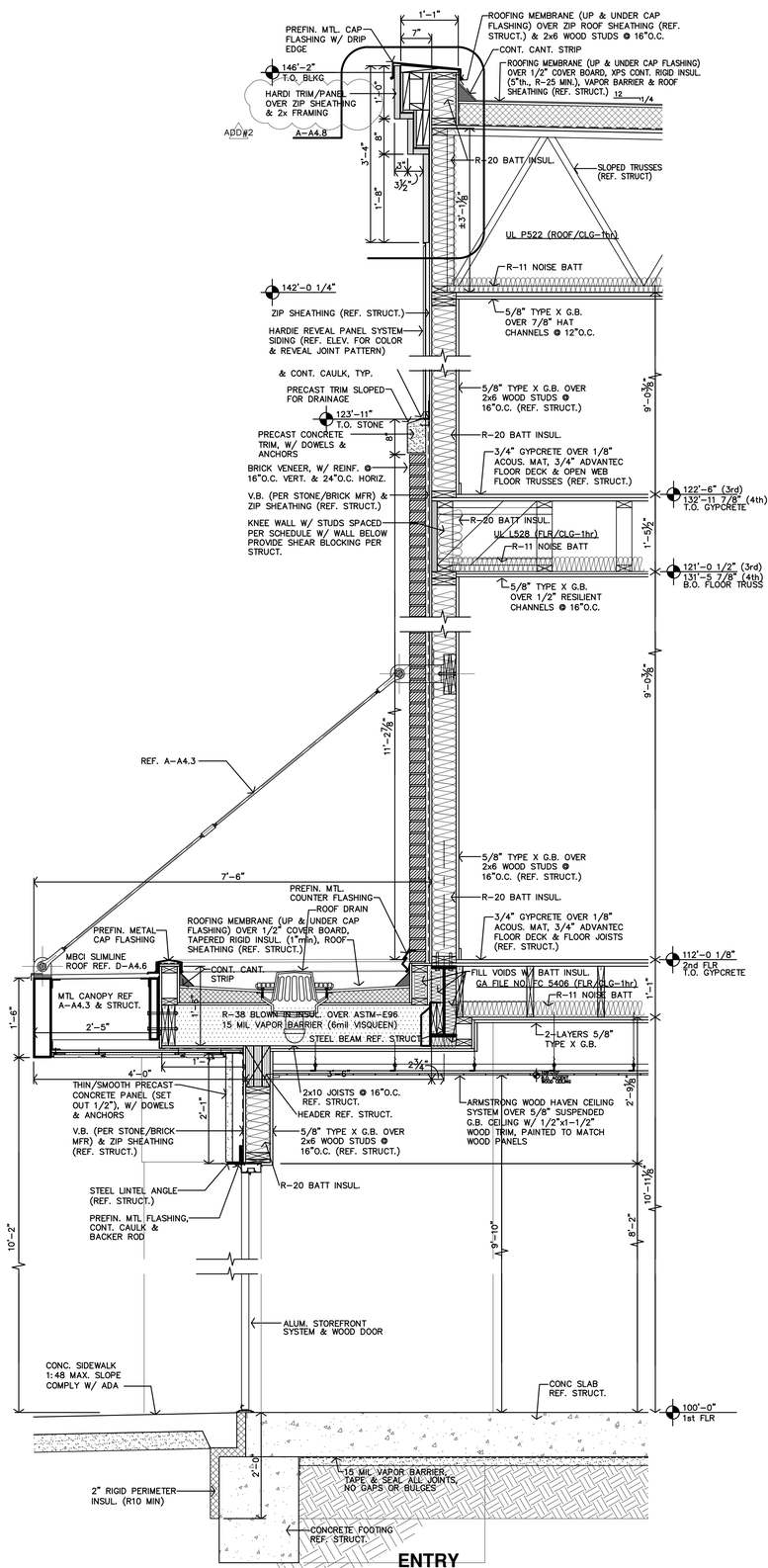

B ENTRY WALL SECTION
3/4"=1'-0"

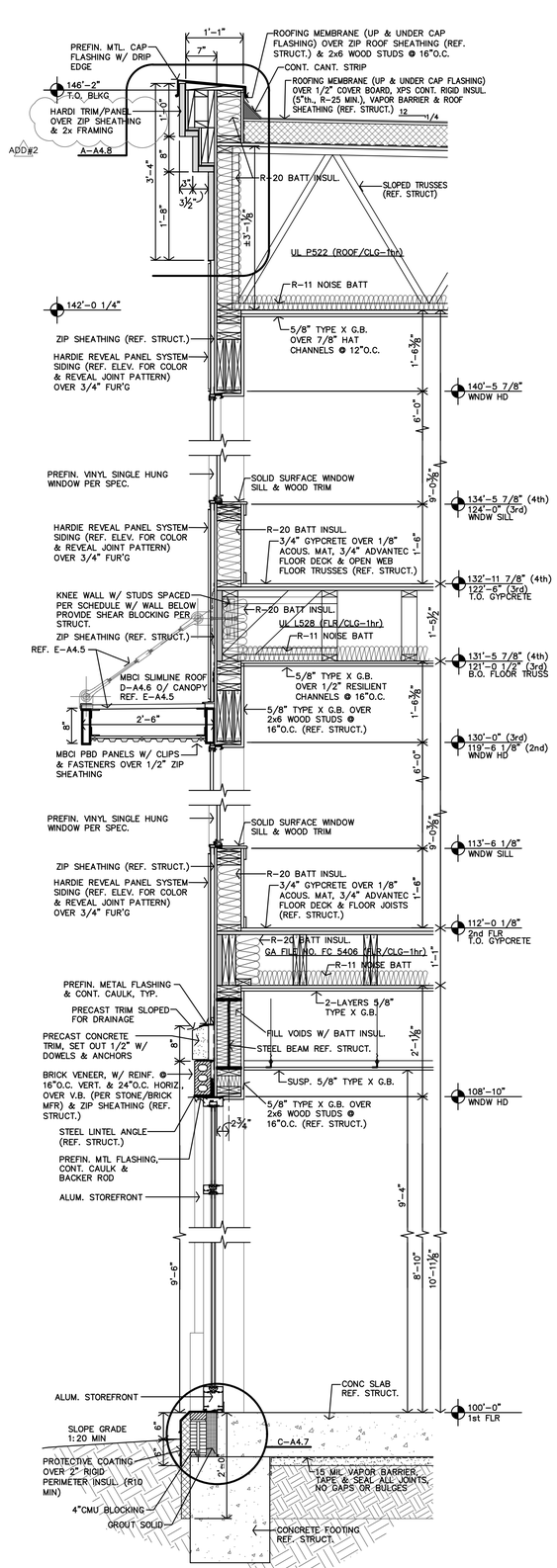

A WALL SECTION
3/4"=1'-0"

Reviewed for Code Compliance
Josh Hamlin
04/30/2025

JonesGillamRenz
730 N. Ninth
Salina, KS 67401
1881 Main Street, Suite 301
Kansas City, MO 64108
jgr@jgrarchitects.com
785.827.0386

THE RESERVES at MAGNOLIA
NEW APARTMENT COMPLEX
DENTON, TEXAS

REGISTERED ARCHITECT
JEFFREY S. GILLAM
5-17-2023
22416
STATE OF TEXAS

REVISION:	
ADD#2	9-8-2023
ADD#1	7-22-2024
DATE:	5-17-2023
JOB:	21-3205
SHEET NO.:	

A4.2

COPYRIGHTED ©

EAVE TRIM WITH DRIP EDGE

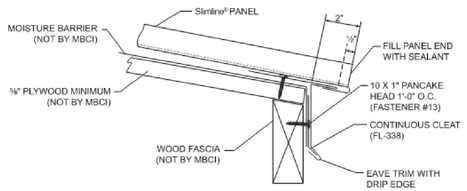

CROSS SECTION OF EAVE TRIM WITH DRIP EDGE

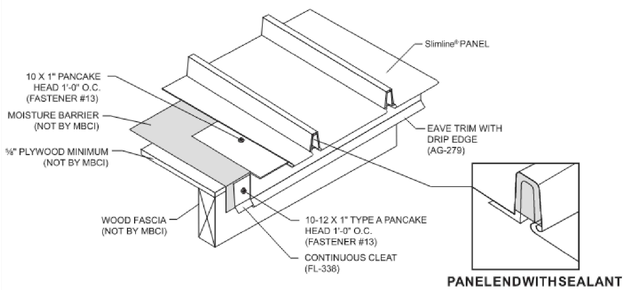

PANELENDWITHSEALANT

RAKE

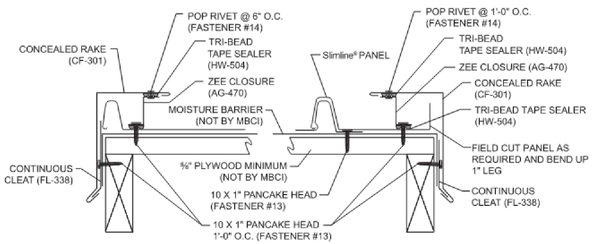

BEGINNING ON MODULE

FINISHING OFF MODULE

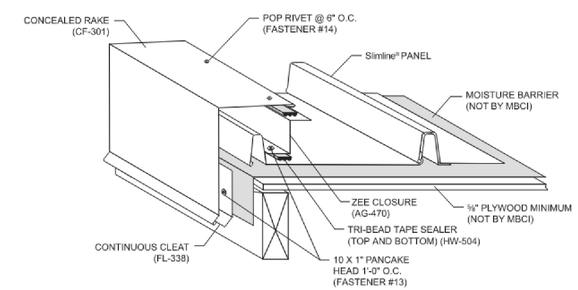

D **MBCI SLIMLINE ROOF SYSTEM**
NTS

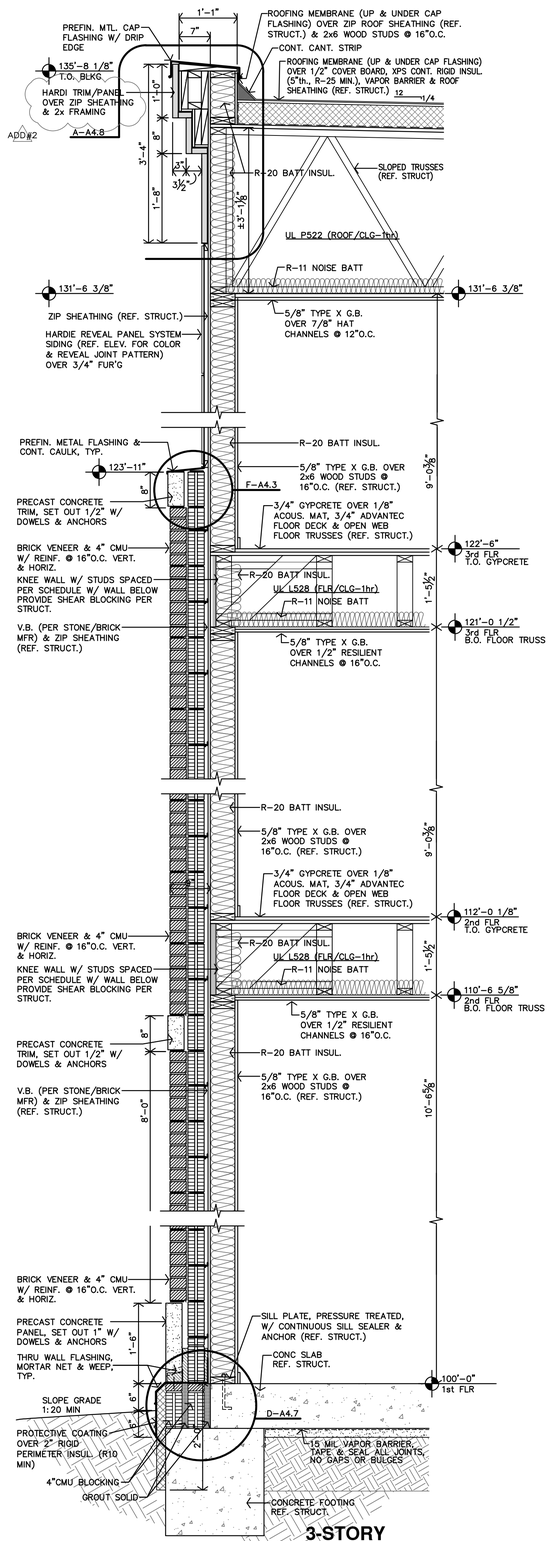

C **3-STORY WALL SECTION**
3/4"=1'-0"

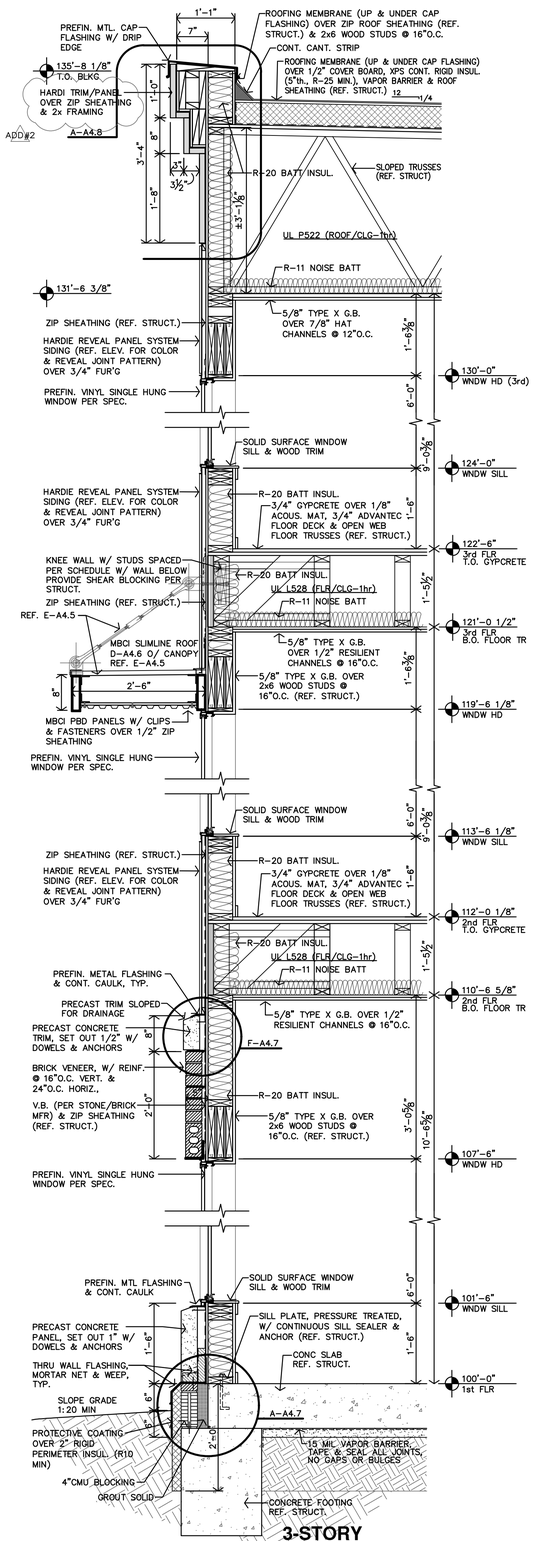

B **3-STORY WALL SECTION**
3/4"=1'-0"

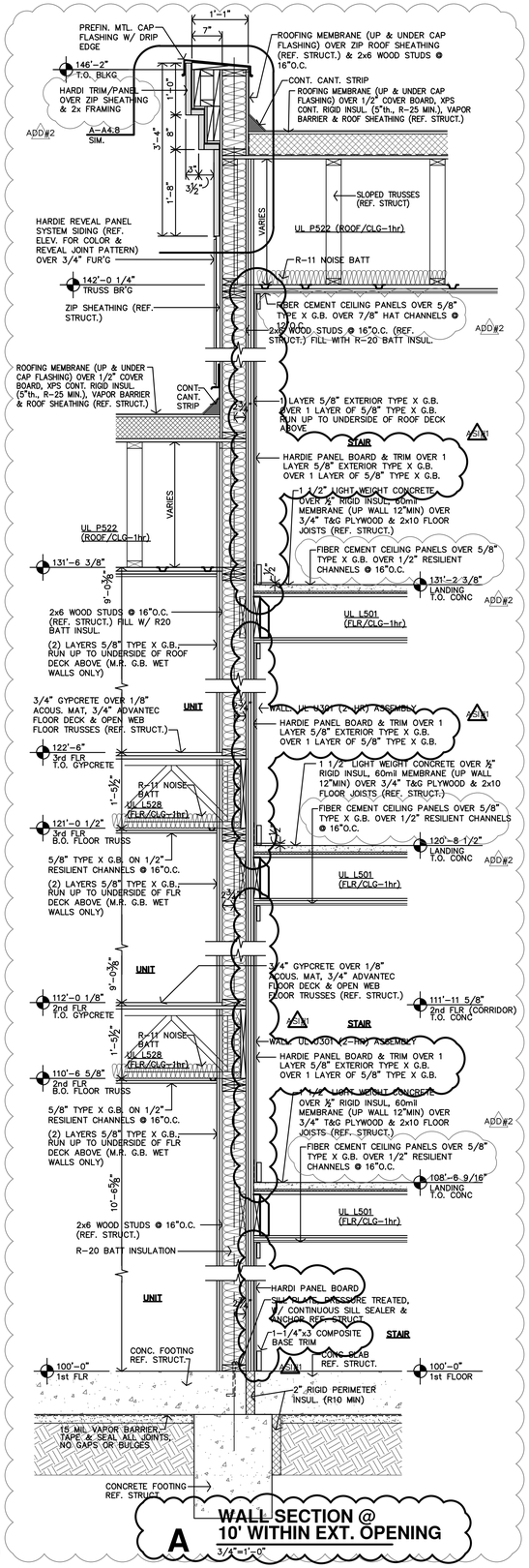

A **WALL SECTION @ 10' WITHIN EXT. OPENING**
3/4"=1'-0"

ADD#1

JonesGillamRenz
730 N. Ninth
Salina, KS 67401
1881 Main Street, Suite 301
Kansas City, MO 64108
785.827.0386
jgr@jgrarchitects.com

THE RESERVES at MAGNOLIA

NEW APARTMENT COMPLEX

DENTON, TEXAS

REGISTERED ARCHITECT — JAMES S. GILLAM — 22419 — 5-17-2023 — STATE OF TEXAS

REVISION:	
ADD#1	6-19-2023
ADD#2	9-8-2023
ADD#1	7-22-2024
DATE:	5-17-2023
JOB:	21-3205
SHEET NO.:	

A4.6

COPYRIGHTED ©

Reviewed for Code Compliance
Josh Hamlin
04/30/2025

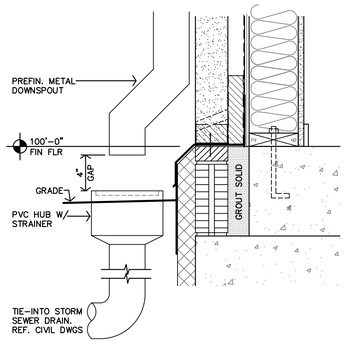

U DOWNSPOUT HUB DETAIL
1 1/2"=1'-0"

T NOT USED

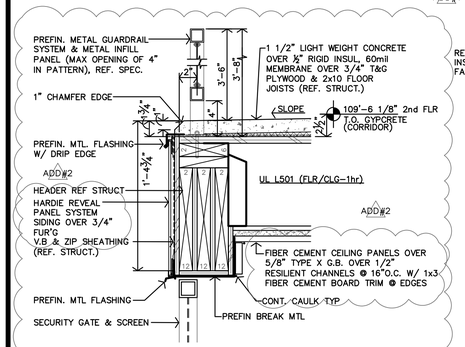

S DETAIL @ S1 & S3

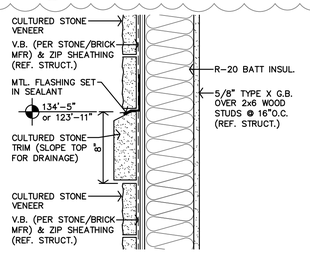

R DETAIL
1 1/2"=1'-0"

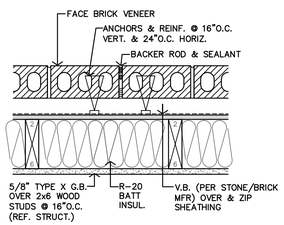

Q BRICK CONTROL JOINT DETAIL
1 1/2"=1'-0"

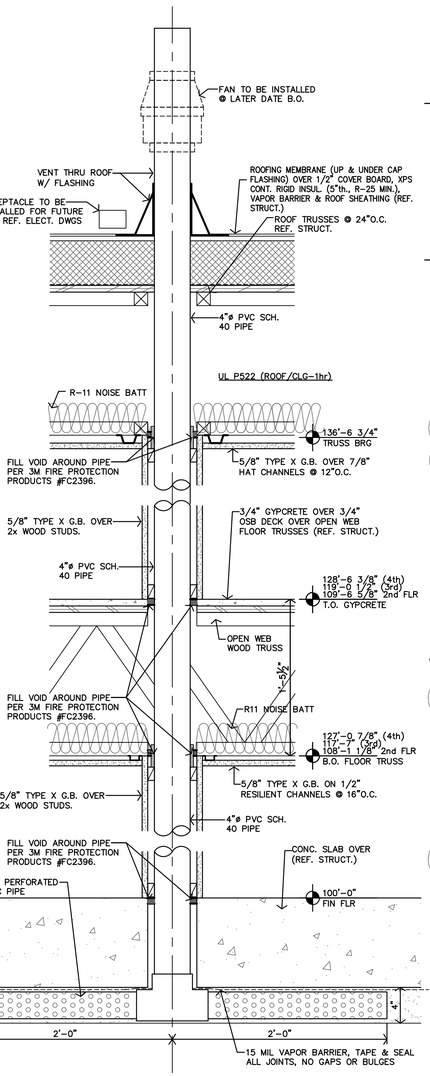

O RADON PIPE DETAIL
1 1/2"=1'-0"

P DETAIL
1 1/2"=1'-0"

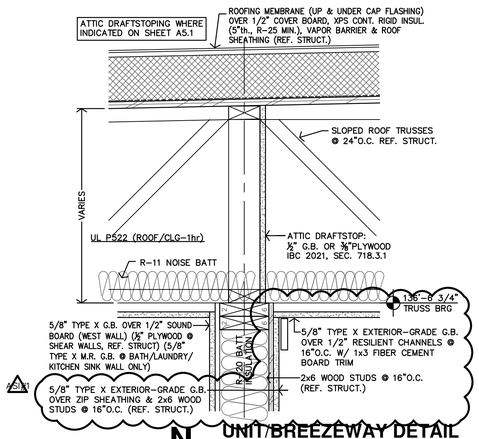

N UNIT/BREEZEWAY DETAIL
1 1/2"=1'-0"

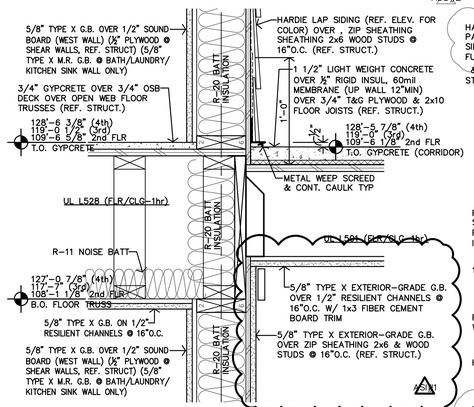

M UNIT/BREEZEWAY DETAIL
1 1/2"=1'-0"

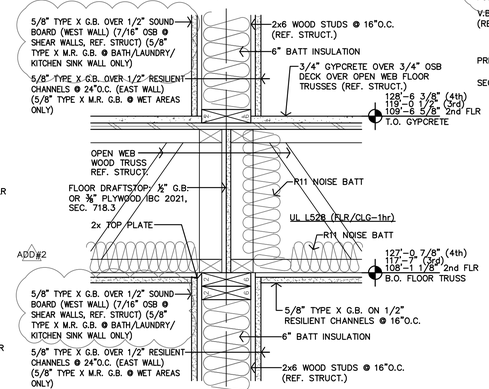

L UNIT/UNIT DETAIL
1 1/2"=1'-0"

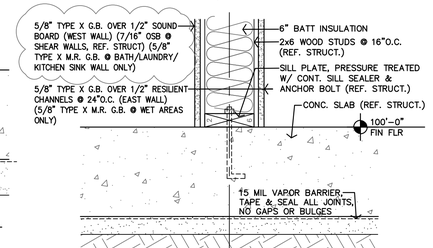

K UNIT/UNIT DETAIL
1 1/2"=1'-0"

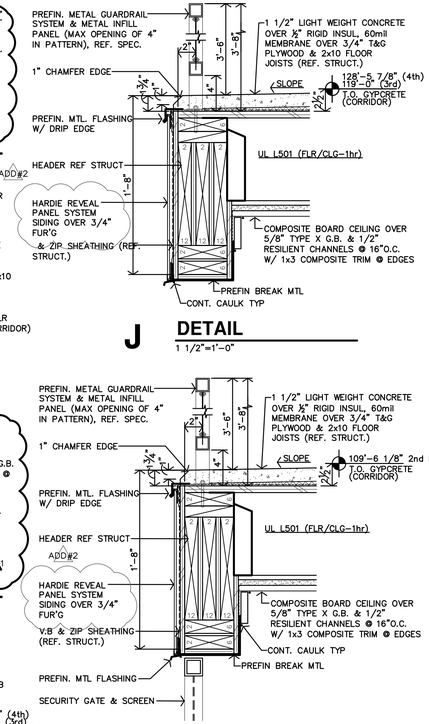

J DETAIL
1 1/2"=1'-0"

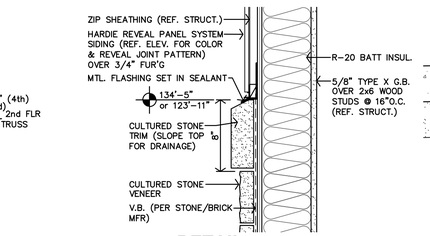

G DETAIL
1 1/2"=1'-0"

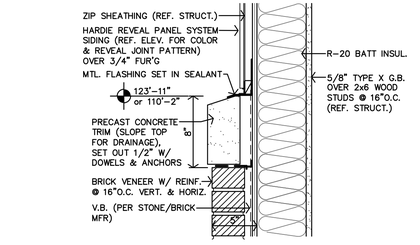

F DETAIL
1 1/2"=1'-0"

H DETAIL @ S2
1 1/2"=1'-0"

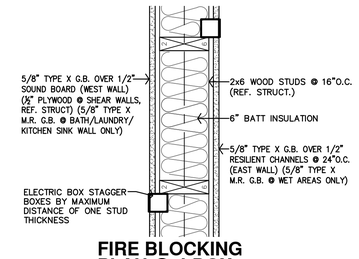

E FIRE BLOCKING PLAN @ J-BOX
1 1/2"=1'-0"

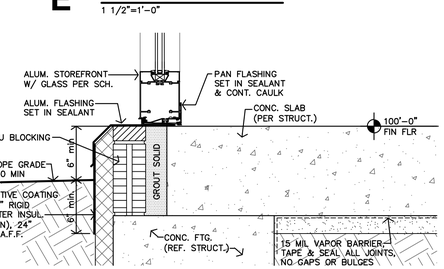

D DETAIL
1 1/2"=1'-0"

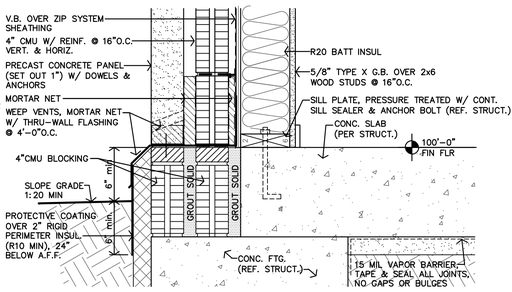

C DETAIL
1 1/2"=1'-0"

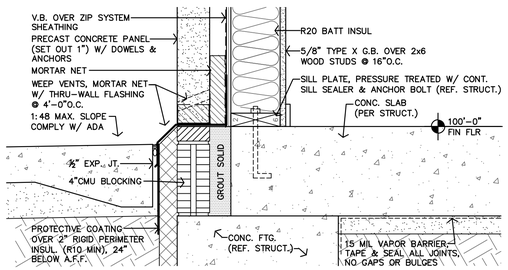

B DETAIL AT WALK
1 1/2"=1'-0"

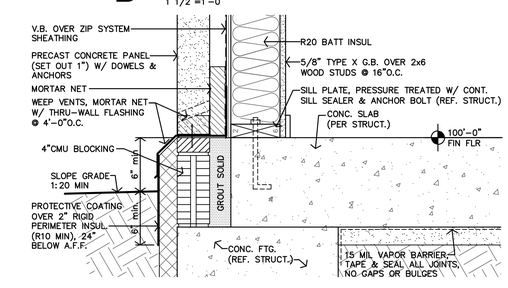

A DETAIL @ STONE
1 1/2"=1'-0"

JonesGillamRenz
730 N. Ninth
Salina, KS 67401
1881 Main Street, Suite 301
Kansas City, MO 64108
785.827.0386
jgr@jgrarchitects.com

THE RESERVES at MAGNOLIA
NEW APARTMENT COMPLEX
DENTON, TEXAS

REGISTERED ARCHITECT JAMES S. GILLAM 22415 STATE OF TEXAS 5-17-2023

REVISION:	
ADD#1	6-19-2023
ADD#2	9-8-2023
ADD#3	7-22-2024
DATE:	5-17-2023
JOB:	21-3205
SHEET NO.:	

A4.7

COPYRIGHTED ©

Reviewed for Code Compliance
Josh Hamlin
04/30/2025

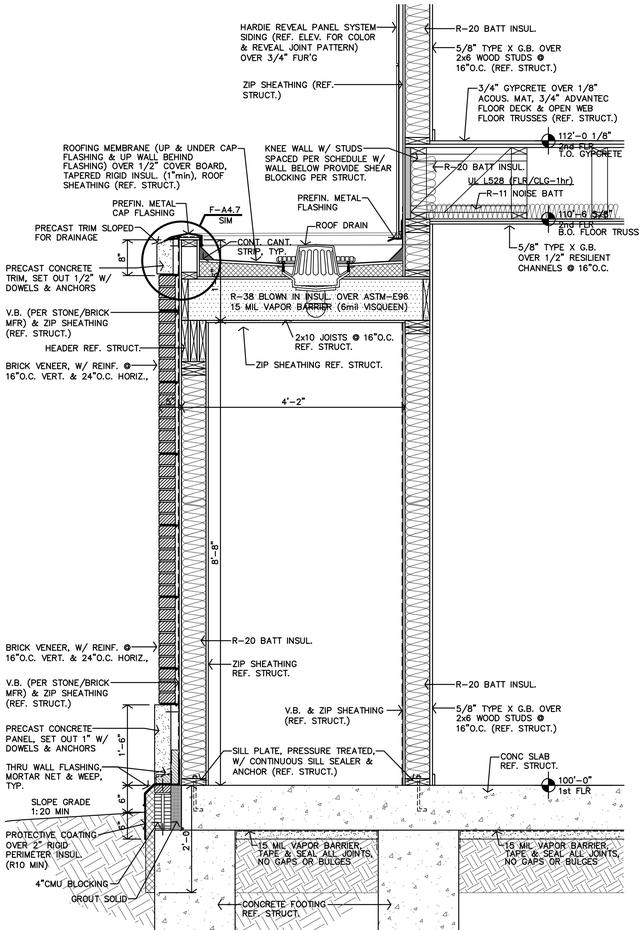

D **FIRE SPRINKLER CLOSET SECTION**
3/4"=1'-0"

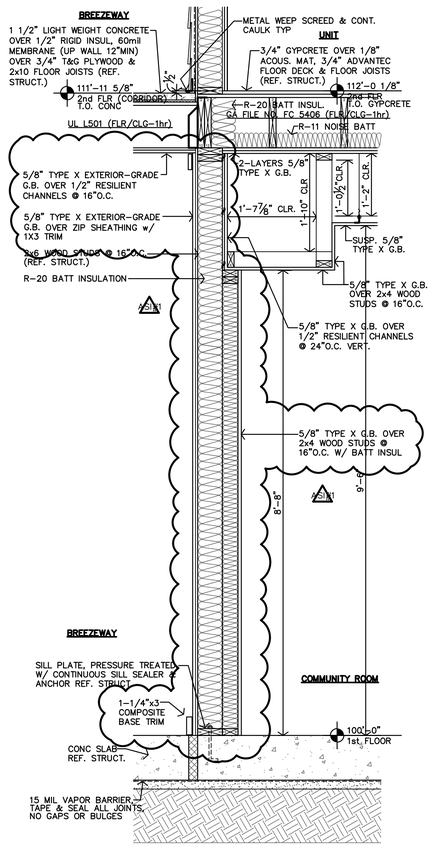

C **COMMUNITY ROOM ACCENT WALL**
3/4"=1'-0"

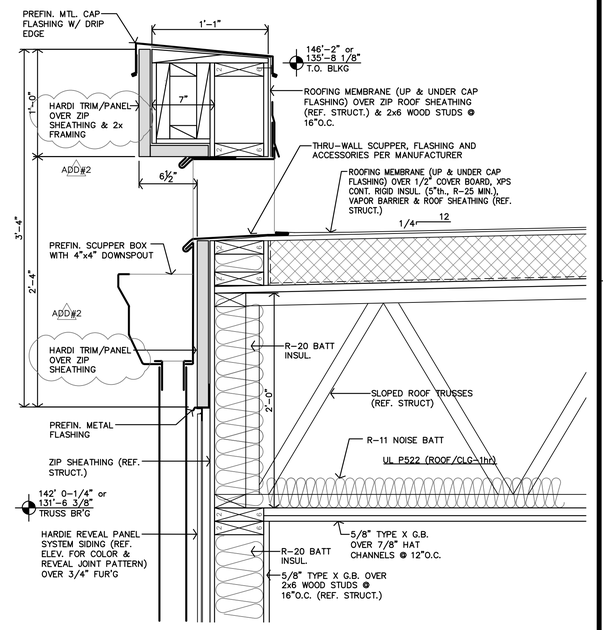

B **SCUPPER BOX DETAIL**
1 1/2"=1'-0"

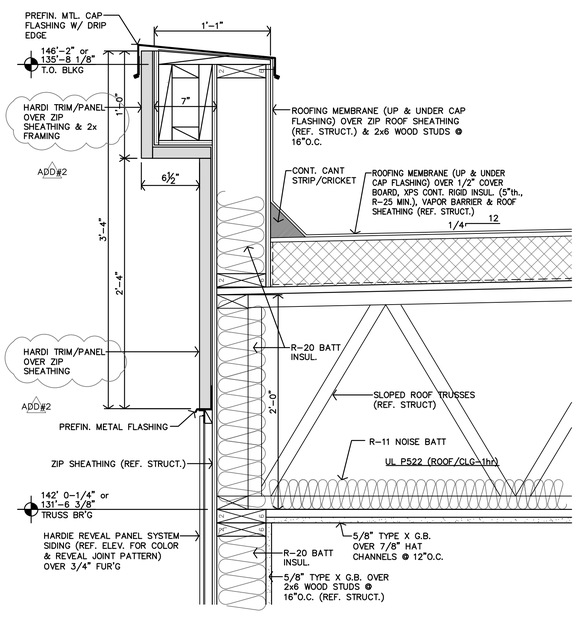

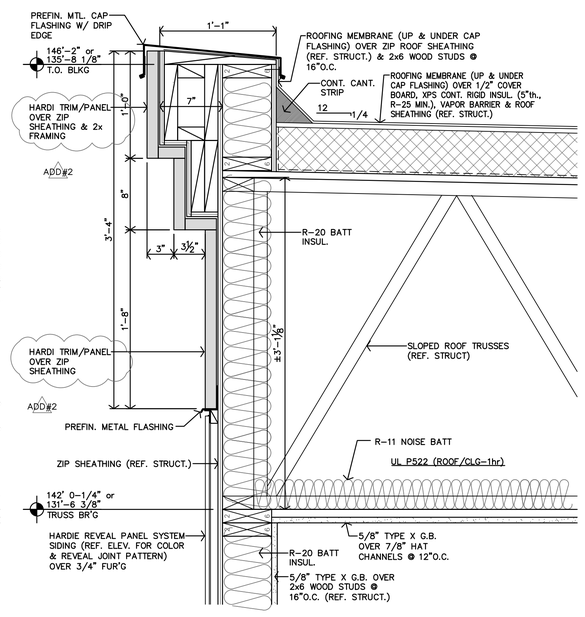

A **LOW PARAPET DETAIL**
1 1/2"=1'-0"

Reviewed for Code Compliance
Josh Hamlin
04/30/2025

JonesGillamRenz
730 N. Ninth
Salina, KS 67401
1881 Main Street, Suite 301
Kansas City, MO 64108
785.827.0386
jgr@jgrarchitects.com

THE RESERVES at MAGNOLIA
NEW APARTMENT COMPLEX
DENTON, TEXAS

REGISTERED ARCHITECT JOSEPH S. GILLAM 5-17-2023 32415 STATE OF TEXAS

REVISION:	
ADD#2	9-8-2023
A5.1	7-22-2024
DATE:	5-17-2023
JOB:	21-3205
SHEET NO.:	

A4.8

COPYRIGHTED ©

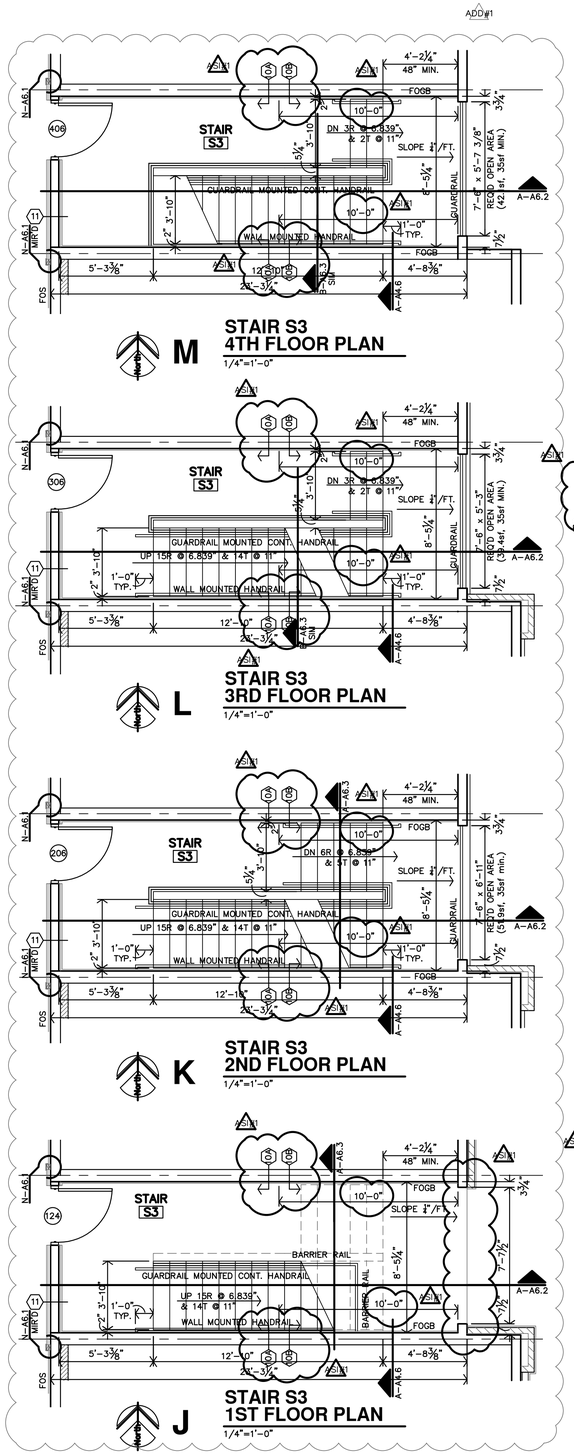

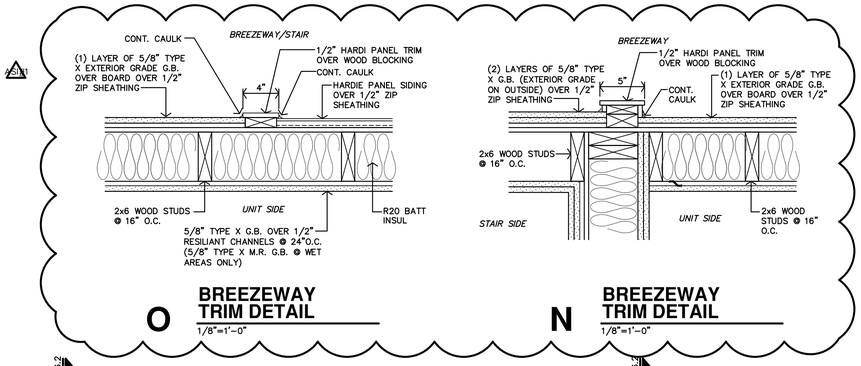

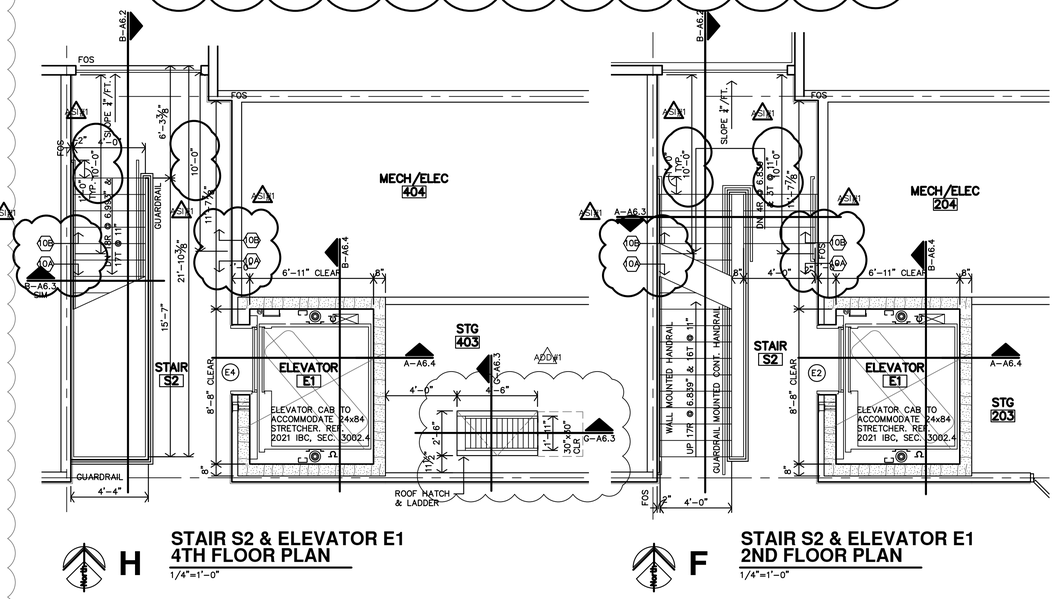

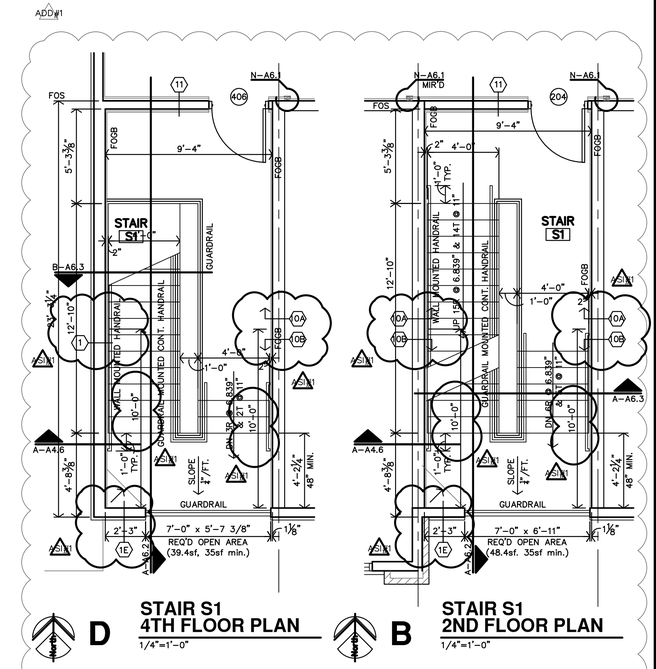

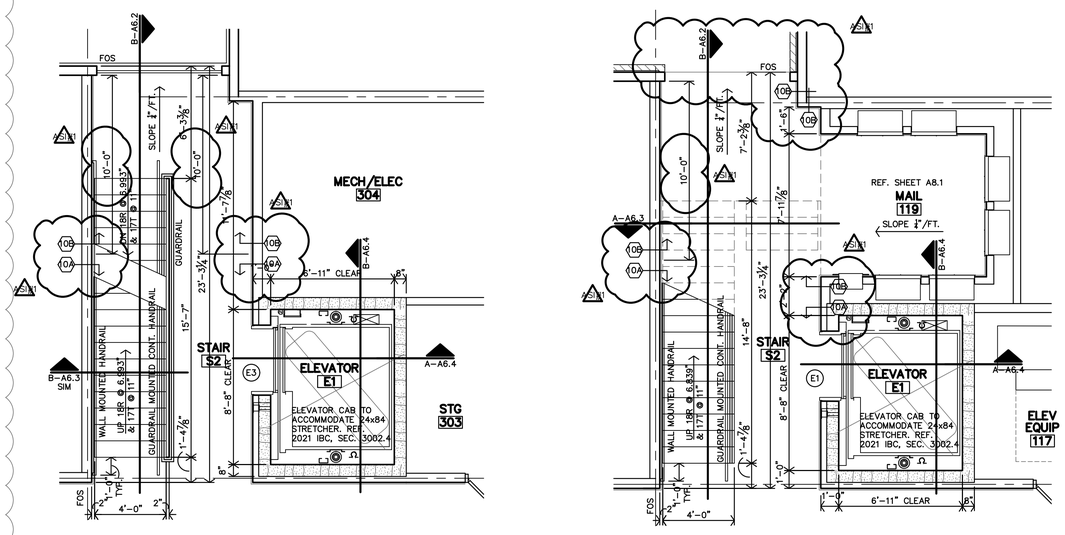

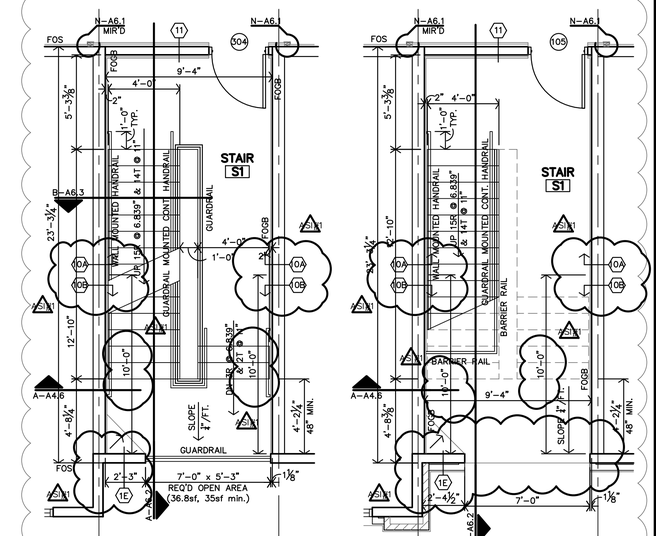

Reviewed for Code Compliance
Josh Hamlin
04/30/2025

JonesGillamRenz
730 N. Ninth
Salina, KS 67401
1881 Main Street, Suite 301
Kansas City, MO 64108
785.827.0386
jgr@jgrarchitects.com

THE RESERVES at MAGNOLIA

NEW APARTMENT COMPLEX

DENTON, TEXAS

REGISTERED ARCHITECT
STEVEN S. GILLAM
5-17-2023
22419
STATE OF TEXAS

REVISION:	
ADD'N#1	6-19-2023
ASI#1	7-22-2024
DATE:	5-17-2023
JOB:	21-3205
SHEET NO.:	

A6.1

COPYRIGHTED©

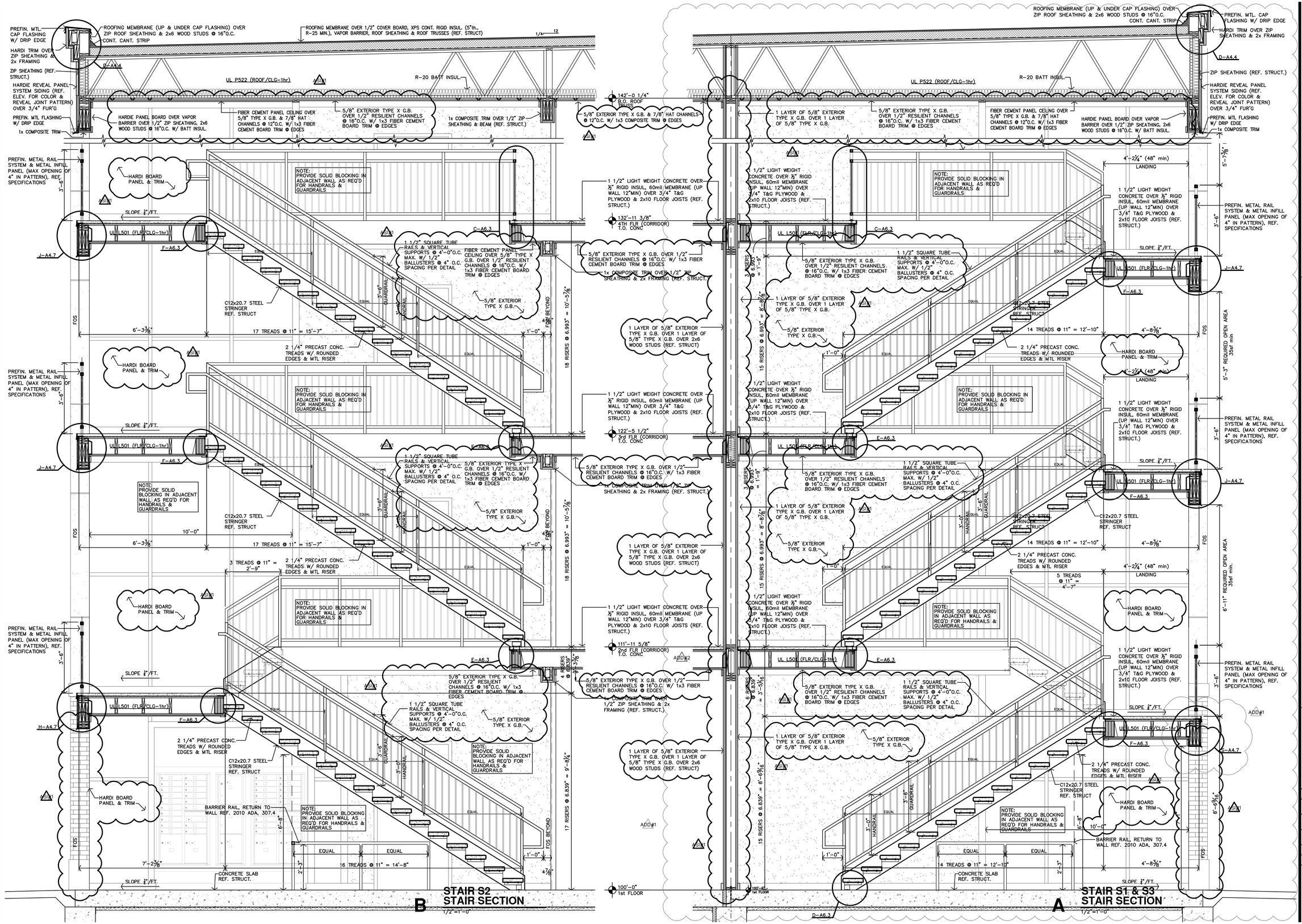

Reviewed for Code Compliance
Josh Hamlin
04/30/2025

JonesGillamRenz
730 N. Ninth
Salina, KS 67401
1881 Main Street, Suite 301
Kansas City, MO 64108
785.827.0386
jgr@jgrarchitects.com

THE RESERVES at MAGNOLIA

NEW APARTMENT COMPLEX

DENTON, TEXAS

REGISTERED ARCHITECT
JEFFREY S. GILLAM
5-17-2023
22415
STATE OF TEXAS

REVISION:	
ADD#1	6-19-2023
ADD#2	9-8-2023
A5.1	7-22-2024
DATE:	5-17-2023
JOB:	21-3205
SHEET NO.:	

A6.2

COPYRIGHTED©

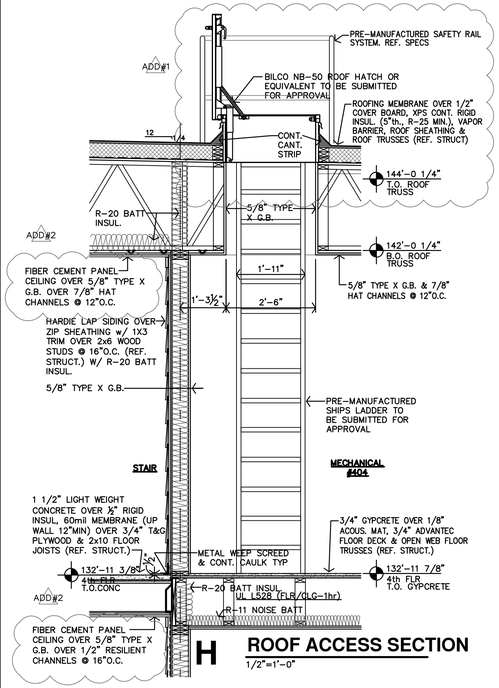

H **ROOF ACCESS SECTION**
1/2"=1'-0"

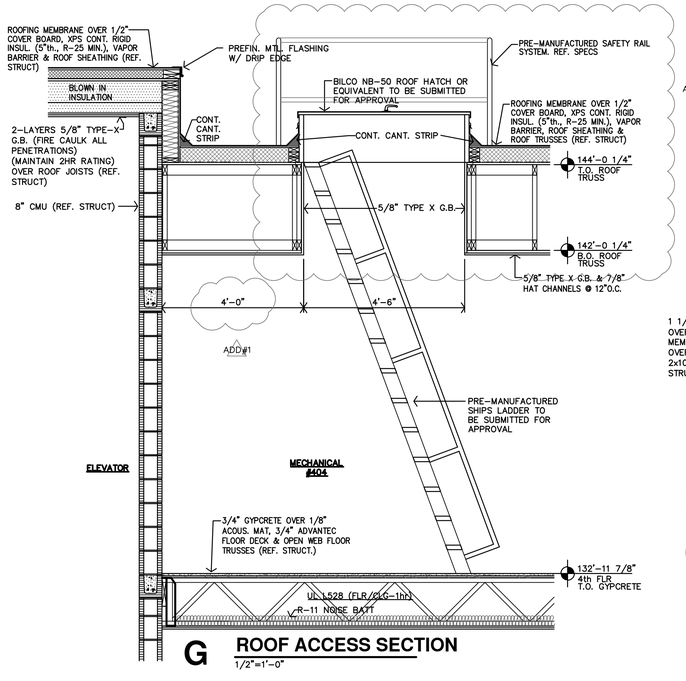

G **ROOF ACCESS SECTION**
1/2"=1'-0"

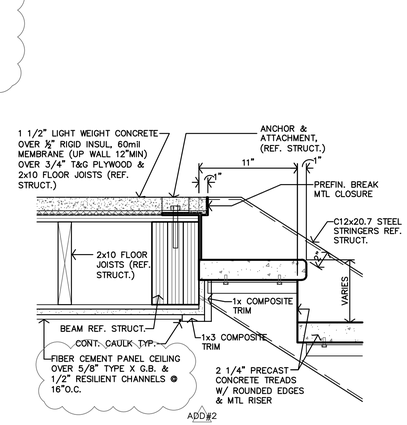

F **STAIR DETAIL**
1 1/2"=1'-0"

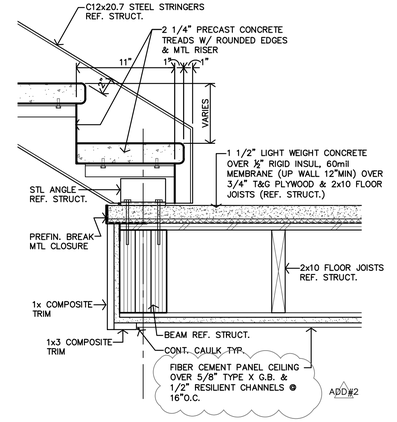

E **STAIR DETAIL**
1 1/2"=1'-0"

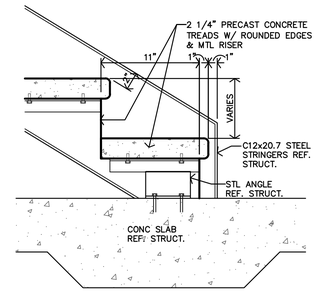

D **STAIR DETAIL**
1 1/2"=1'-0"

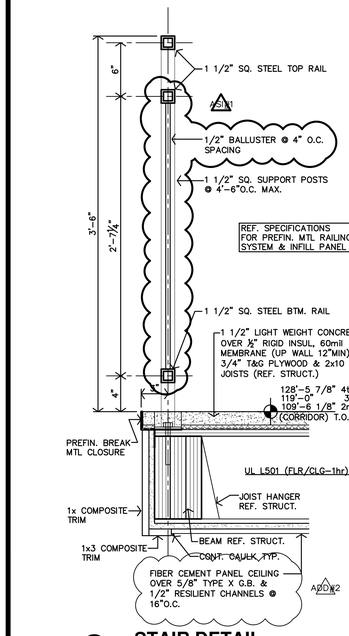

C **STAIR DETAIL**
1 1/2"=1'-0"

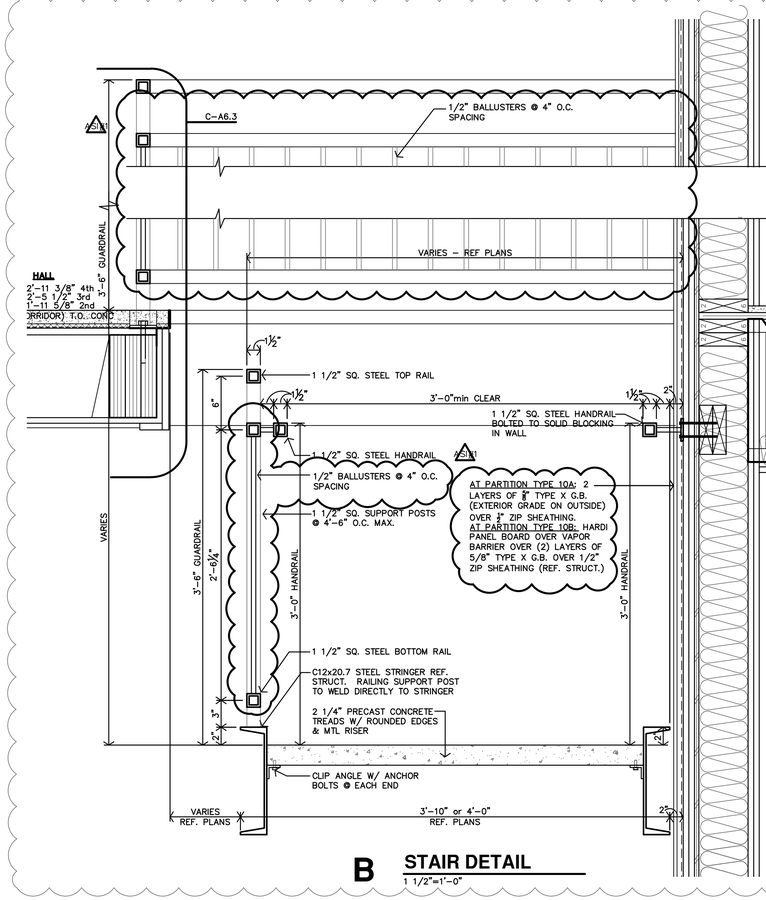

B **STAIR DETAIL**
1 1/2"=1'-0"

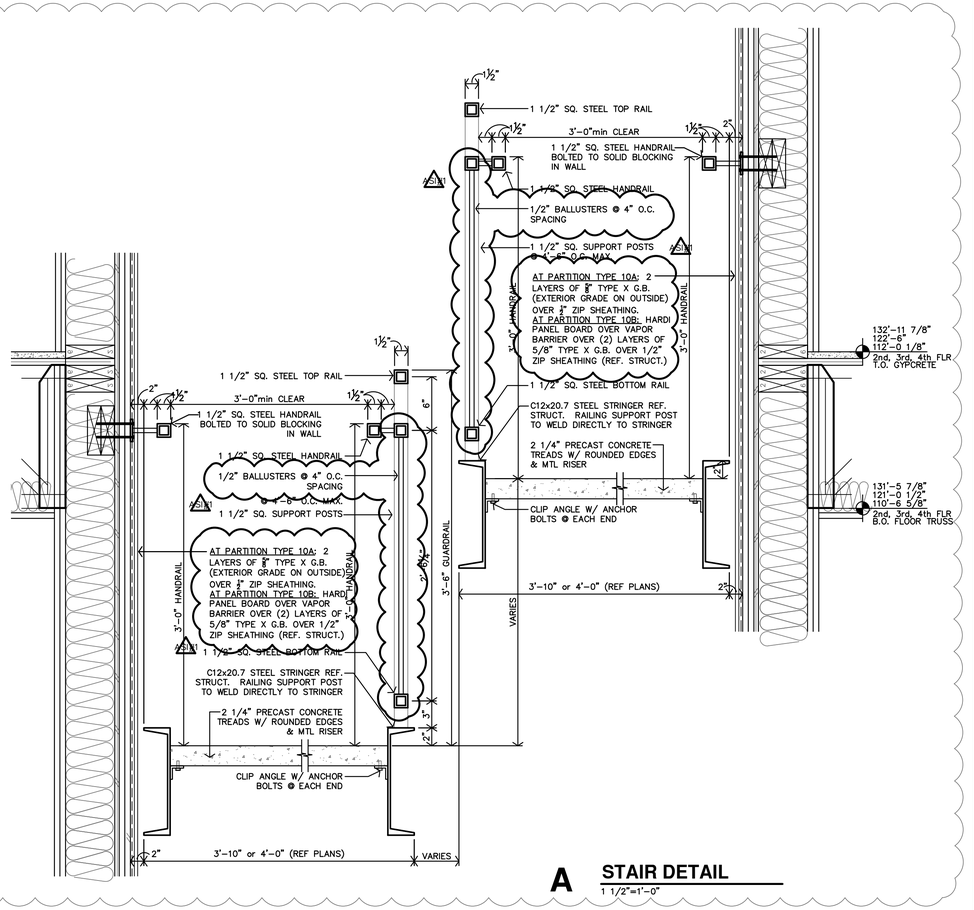

A **STAIR DETAIL**
1 1/2"=1'-0"

JonesGillamRenz
730 N. Ninth
Salina, KS 67401
1881 Main Street, Suite 301
Kansas City, MO 64108
jgr@jgrarchitects.com
785.827.0386

THE RESERVES at MAGNOLIA

NEW APARTMENT COMPLEX

DENTON, TEXAS

REGISTERED ARCHITECT
JAMES S. GILLAM
5-17-2023
22415
STATE OF TEXAS

REVISION:	
ADD#1	6-19-2023
ADD#2	9-8-2023
ADD#3	7-22-2024
DATE:	5-17-2023
JOB:	21-3205
SHEET NO.:	

A6.3

COPYRIGHTED ©

Reviewed for Code Compliance
Josh Hamlin
04/30/2025

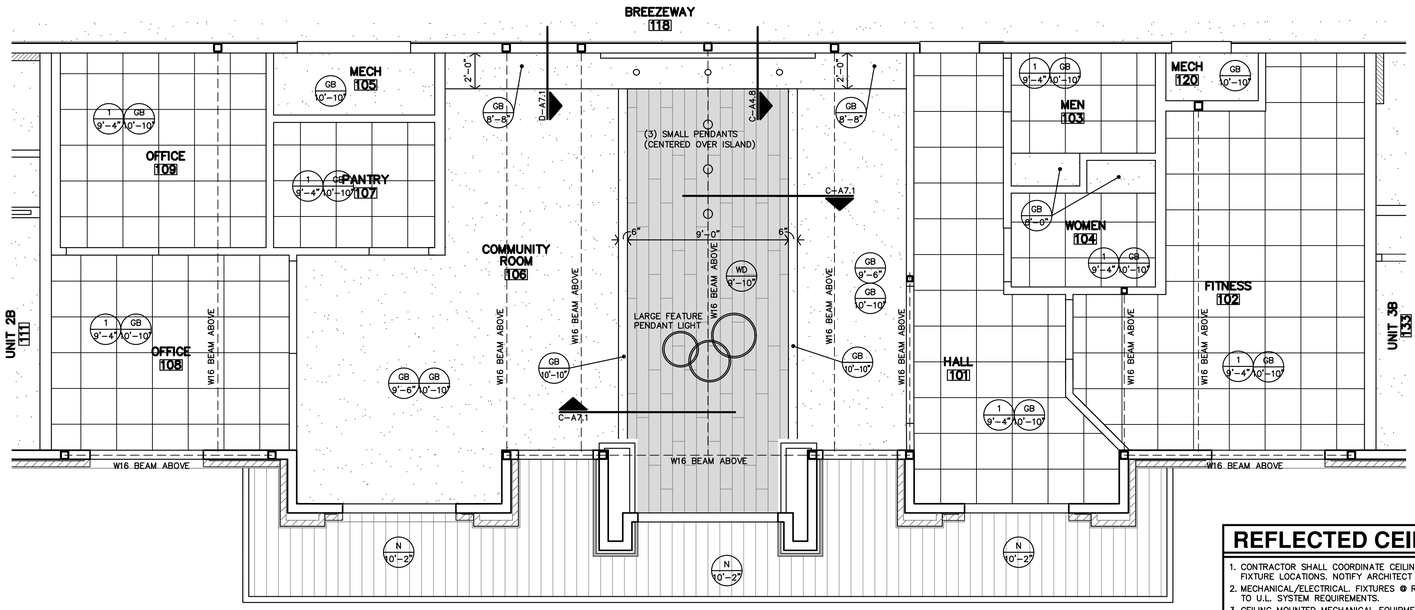

B ENLARGED PARTIAL REFLECTED CEILING PLAN

1/4"=1'-0"

REFLECTED CEILING PLAN NOTES

1. CONTRACTOR SHALL COORDINATE CEILING LAYOUT WITH MECHANICAL AND ELECTRICAL FIXTURE LOCATIONS. NOTIFY ARCHITECT IMMEDIATELY OF ANY CONFLICT OR DISCREPANCY.
2. MECHANICAL/ELECTRICAL. FIXTURES ⊕ RATED CEILINGS SHALL BE HUNG IN CONFORMANCE TO U.L. SYSTEM REQUIREMENTS.
3. CEILING MOUNTED MECHANICAL EQUIPMENT AND SUSPENDED MECHANICAL EQUIPMENT MUST BE SUSPENDED DIRECTLY FROM THE STRUCTURE.
4. WHERE SUSPENSION DEVICES, WIRES, RODS, ETC. PENETRATE CEILING GRID AND/OR TILE OR G.B. PENETRATIONS SHALL BE NEAT AND CLEANLY CUT. PENETRATION OPENING SHALL BE AS SMALL AS POSSIBLE. SEAL AT G.B.

NON-RATED WALLS
– EXTEND TO BOTTOM OF FLOOR TRUSSES
1 HOUR LOAD BEARING WALLS
– EXTEND TO DECK

1/2 HOUR FIRE PARTITION; CORRIDOR

2 HOUR CONSTRUCTION; SHAFT WALLS

1 HOUR FIRE PARTITION; BETWEEN DWELLING UNITS

SEAL VOIDS AT TOPS OF WALLS AND PENETRATIONS WITH U.L. LISTED FIRE BATT INSULATION, PILLOWS, AND/OR FIRE SEALANT AS REQUIRED BY CONDITION. AT RATED WALLS.

CEILING TYPES
REFER SPECIFICATIONS

1	2x2 ACOUSTIC LAY-IN TILES & GRID
GB	5/8" GB (PAINTED)
EGB	EXTERIOR GYP-BD (PAINTED)
FCP	FIBER CEMENT PANELS
WD	"WOOD LOOK" CEILING SYSTEM
N	NICHIHA PANEL AWP SOFFIT
M	PREFIN. MTL SOFFIT PANEL

CLG. TYPE
CLG. HEIGHT

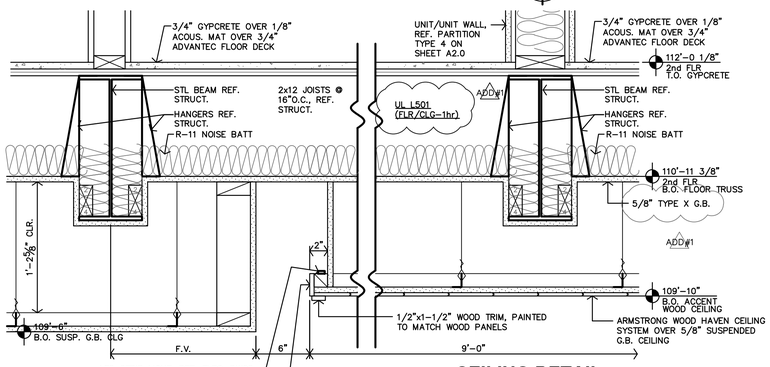

C CEILING DETAIL

1 1/2"=1'-0"

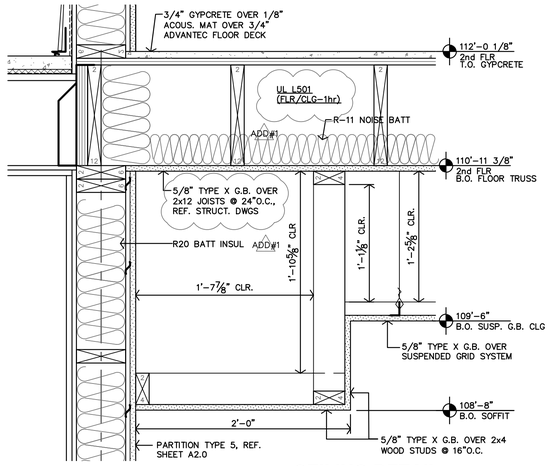

D CEILING DETAIL

1 1/2"=1'-0"

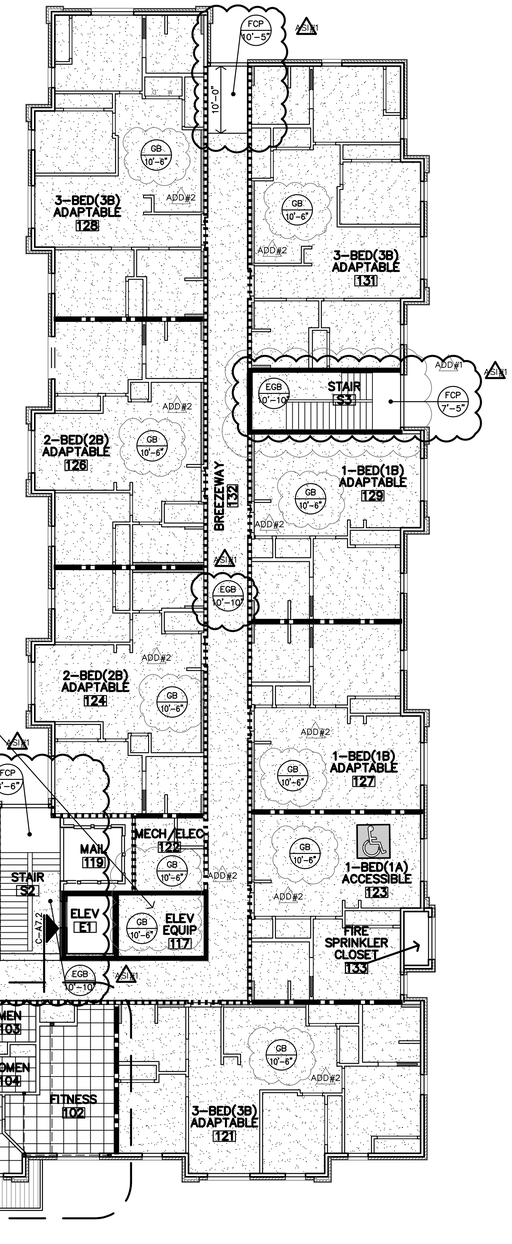

A FIRST FLOOR REFLECTED CEILING PLAN

3/32"=1'-0"

Reviewed for Code Compliance
Josh Hamlin
04/30/2025

JonesGillamRenz
730 N. Ninth
Salina, KS 67401
785.827.0386
1881 Main Street, Suite 301
Kansas City, MO 64108
jgr@jgrarchitects.com

THE RESERVES at MAGNOLIA

NEW APARTMENT COMPLEX

DENTON, TEXAS

REGISTERED ARCHITECT
STEVEN S. GILLAM
5-17-2023
32415
STATE OF TEXAS

REVISION:	
ADD#1	6-19-2023
ADD#2	9-8-2023
ASI#1	7-22-2024
DATE:	5-17-2023
JOB:	21-3205
SHEET NO.:	

A7.1

COPYRIGHTED ©

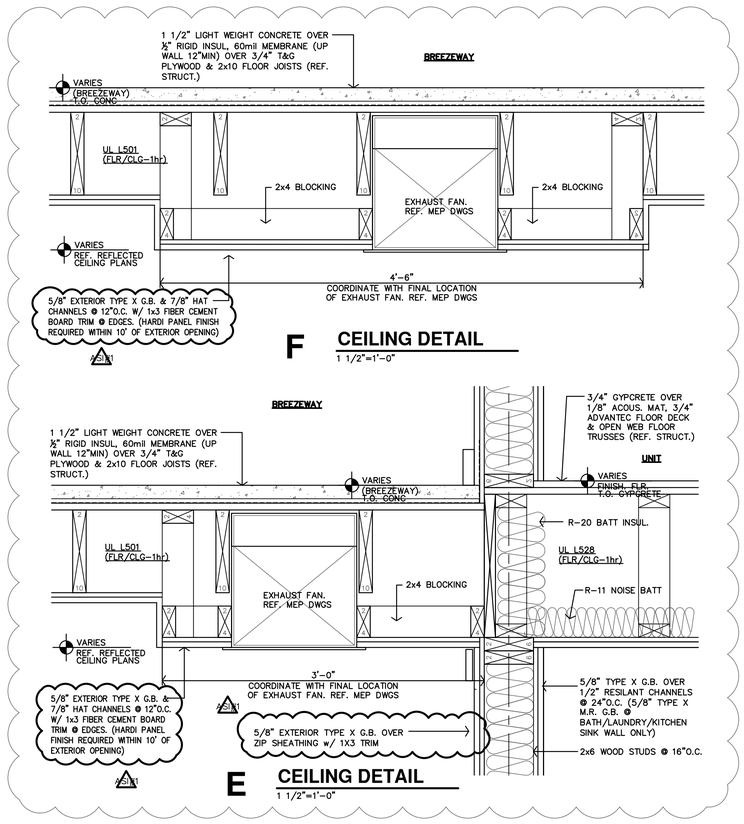

REFLECTED CEILING PLAN NOTES

1. CONTRACTOR SHALL COORDINATE CEILING LAYOUT WITH MECHANICAL AND ELECTRICAL FIXTURE LOCATIONS. NOTIFY ARCHITECT IMMEDIATELY OF ANY CONFLICT OR DISCREPANCY.
2. MECHANICAL/ELECTRICAL. FIXTURES @ RATED CEILINGS SHALL BE HUNG IN CONFORMANCE TO U.L. SYSTEM REQUIREMENTS.
3. CEILING MOUNTED MECHANICAL EQUIPMENT AND SUSPENDED MECHANICAL EQUIPMENT MUST BE SUSPENDED DIRECTLY FROM THE STRUCTURE.
4. WHERE SUSPENSION DEVICES, WIRES, RODS, ETC. PENETRATE CEILING GRID AND/OR TILE OR G.B. PENETRATIONS SHALL BE NEAT AND CLEANLY CUT. PENETRATION OPENING SHALL BE AS SMALL AS POSSIBLE. SEAL AT G.B.

NON-RATED WALLS
– EXTEND TO BOTTOM OF FLOOR TRUSSES
1 HOUR LOAD BEARING WALLS
– EXTEND TO DECK

1/2 HOUR FIRE PARTITION; CORRIDOR

2 HOUR CONSTRUCTION; SHAFT WALLS

1 HOUR FIRE PARTITION; BETWEEN DWELLING UNITS

SEAL VOIDS AT TOPS OF WALLS AND PENETRATIONS WITH U.L. LISTED FIRE BATT INSULATION, PILLOWS, AND/OR FIRE SEALANT AS REQUIRED BY CONDITION. AT RATED WALLS.

CEILING TYPES
REFER SPECIFICATIONS

1	2x2 ACOUSTIC LAY-IN TILES & GRID
GB	G.B. ON FURRING
EGB	EXTERIOR GYP. BD. (PAINTED)
FCP	FIBER CEMENT PANELS
WD	"WOOD LOOK" CEILING SYSTEM
N	NICHIHA PANEL AWP SOFFIT
M	PREFIN. MTL SOFFIT PANEL

1 / 8'-8" CLG. TYPE / CLG. HEIGHT

A2.1 ADD#2

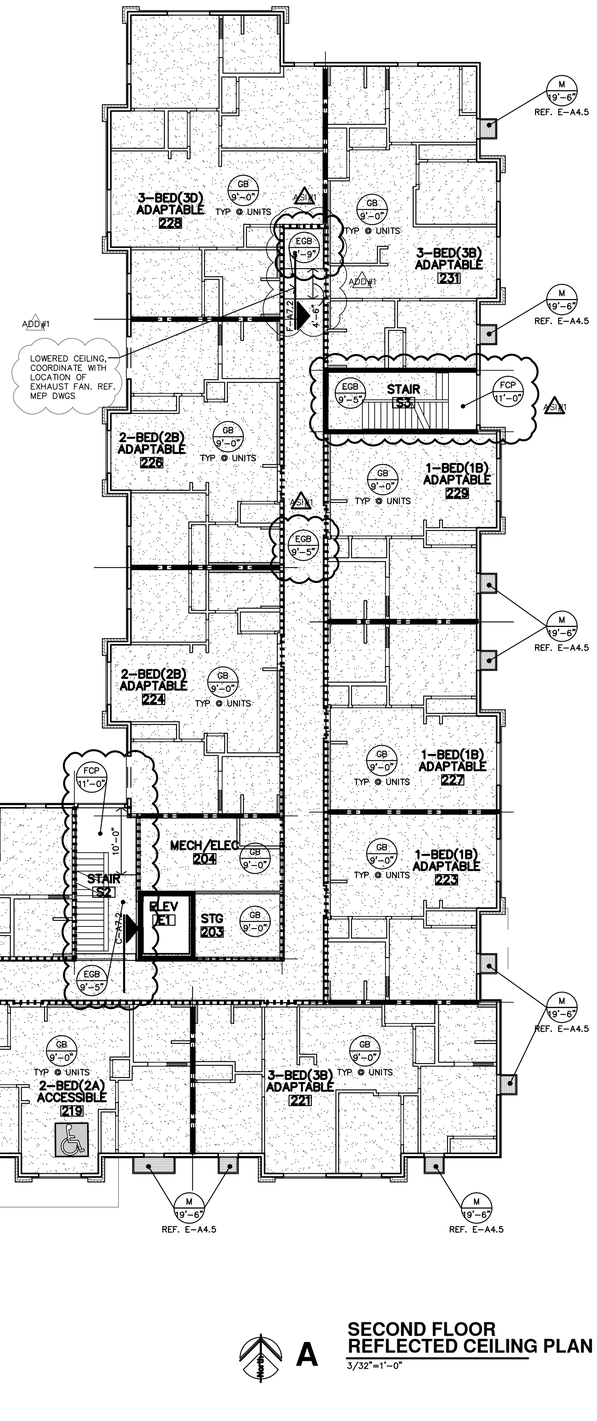

A SECOND FLOOR REFLECTED CEILING PLAN
3/32"=1'-0"

Reviewed for Code Compliance
Josh Hamlin
04/30/2025

JonesGillamRenz
730 N. Ninth
Salina, KS 67401
1881 Main Street, Suite 301
Kansas City, MO 64108
785.827.0386
jgr@jgrarchitects.com

THE RESERVES at MAGNOLIA
NEW APARTMENT COMPLEX
DENTON, TEXAS

REGISTERED ARCHITECT JAMES G. RENZ 5-17-2023 22415 STATE OF TEXAS

REVISION:	
ADD#1	6-19-2023
ADD#2	9-8-2023
A2.1	7-22-2024
DATE:	5-17-2023
JOB:	21-3205
SHEET NO.:	

A7.2

COPYRIGHTED ©

REFLECTED CEILING PLAN NOTES

1. CONTRACTOR SHALL COORDINATE CEILING LAYOUT WITH MECHANICAL AND ELECTRICAL FIXTURE LOCATIONS. NOTIFY ARCHITECT IMMEDIATELY OF ANY CONFLICT OR DISCREPANCY.
2. MECHANICAL/ELECTRICAL. FIXTURES @ RATED CEILINGS SHALL BE HUNG IN CONFORMANCE TO U.L. SYSTEM REQUIREMENTS.
3. CEILING MOUNTED MECHANICAL EQUIPMENT AND SUSPENDED MECHANICAL EQUIPMENT MUST BE SUSPENDED DIRECTLY FROM THE STRUCTURE.
4. WHERE SUSPENSION DEVICES, WIRES, RODS, ETC. PENETRATE CEILING GRID AND/OR TILE OR G.B. PENETRATIONS SHALL BE NEAT AND CLEANLY CUT. PENETRATION OPENING SHALL BE AS SMALL AS POSSIBLE. SEAL AT G.B.

NON-RATED WALLS
– EXTEND TO BOTTOM OF FLOOR TRUSSES
1 HOUR LOAD BEARING WALLS
– EXTEND TO DECK

1/2 HOUR FIRE PARTITION; CORRIDOR

2 HOUR CONSTRUCTION; SHAFT WALLS

1 HOUR FIRE PARTITION; BETWEEN DWELLING UNITS

SEAL VOIDS AT TOPS OF WALLS AND PENETRATIONS WITH U.L. LISTED FIRE BATT INSULATION, PILLOWS, AND/OR FIRE SEALANT AS REQUIRED BY CONDITION. AT RATED WALLS.

CEILING TYPES REFER SPECIFICATIONS	
1	2x2 ACOUSTIC LAY-IN TILES & GRID
GB	GYP BD (PAINTED)
EGB	EXTERIOR GYP BD (PAINTED)
FCP	FIBER CEMENT PANELS
WD	"WOOD LOOK" CEILING SYSTEM
N	NICHIHA PANEL AWP SOFFIT
M	PREFIN. MTL SOFFIT PANEL

1 / 8'-8" — CLG. TYPE / CLG. HEIGHT

ASI#1 ADD#2

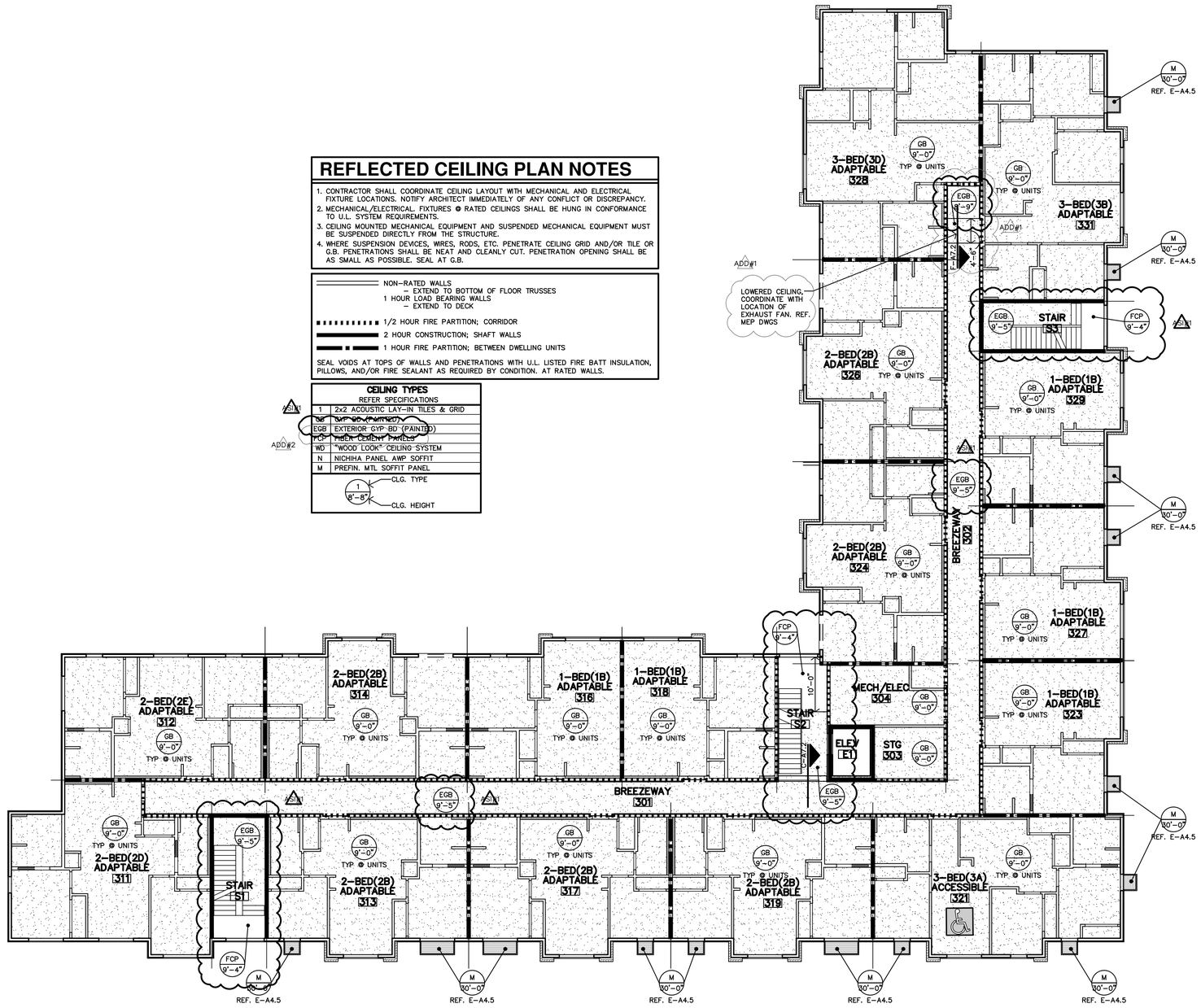

A THIRD FLOOR REFLECTED CEILING PLAN
3/32"=1'-0"

JonesGillamRenz
730 N. Ninth
Salina, KS 67401
785.827.0386
1881 Main Street, Suite 301
Kansas City, MO 64108
jgr@jgrarchitects.com

THE RESERVES at MAGNOLIA

NEW APARTMENT COMPLEX

DENTON, TEXAS

REGISTERED ARCHITECT — JEFFREY S. GILLAM — 5-17-2023 — 22415 — STATE OF TEXAS

REVISION:	
ADD#1	6-19-2023
ADD#2	9-8-2023
ASI#1	7-22-2024
DATE:	5-17-2023
JOB:	21-3205
SHEET NO.:	

A7.3

COPYRIGHTED ©

Reviewed for Code Compliance
Josh Hamlin
04/30/2025

REFLECTED CEILING PLAN NOTES

1. CONTRACTOR SHALL COORDINATE CEILING LAYOUT WITH MECHANICAL AND ELECTRICAL FIXTURE LOCATIONS. NOTIFY ARCHITECT IMMEDIATELY OF ANY CONFLICT OR DISCREPANCY.
2. MECHANICAL/ELECTRICAL. FIXTURES @ RATED CEILINGS SHALL BE HUNG IN CONFORMANCE TO U.L. SYSTEM REQUIREMENTS.
3. CEILING MOUNTED MECHANICAL EQUIPMENT AND SUSPENDED MECHANICAL EQUIPMENT MUST BE SUSPENDED DIRECTLY FROM THE STRUCTURE.
4. WHERE SUSPENSION DEVICES, WIRES, RODS, ETC. PENETRATE CEILING GRID AND/OR TILE OR G.B. PENETRATIONS SHALL BE NEAT AND CLEANLY CUT. PENETRATION OPENING SHALL BE AS SMALL AS POSSIBLE. SEAL AT G.B.

NON-RATED WALLS
– EXTEND TO BOTTOM OF FLOOR TRUSSES
1 HOUR LOAD BEARING WALLS
– EXTEND TO DECK

1/2 HOUR FIRE PARTITION; CORRIDOR

2 HOUR CONSTRUCTION; SHAFT WALLS

1 HOUR FIRE PARTITION; BETWEEN DWELLING UNITS

SEAL VOIDS AT TOPS OF WALLS AND PENETRATIONS WITH U.L. LISTED FIRE BATT INSULATION, PILLOWS, AND/OR FIRE SEALANT AS REQUIRED BY CONDITION. AT RATED WALLS.

CEILING TYPES
REFER SPECIFICATIONS

1	2x2 ACOUSTIC LAY-IN TILES & GRID
GB	TYP. GB (PAINTED)
EGB	EXTERIOR GYP BD (PAINTED)
FC	FIBER CEMENT PANELS
WD	"WOOD LOOK" CEILING SYSTEM
N	NICHIHA PANEL AWP SOFFIT
M	PREFIN. MTL SOFFIT PANEL

1 / 8'-8" CLG. TYPE / CLG. HEIGHT

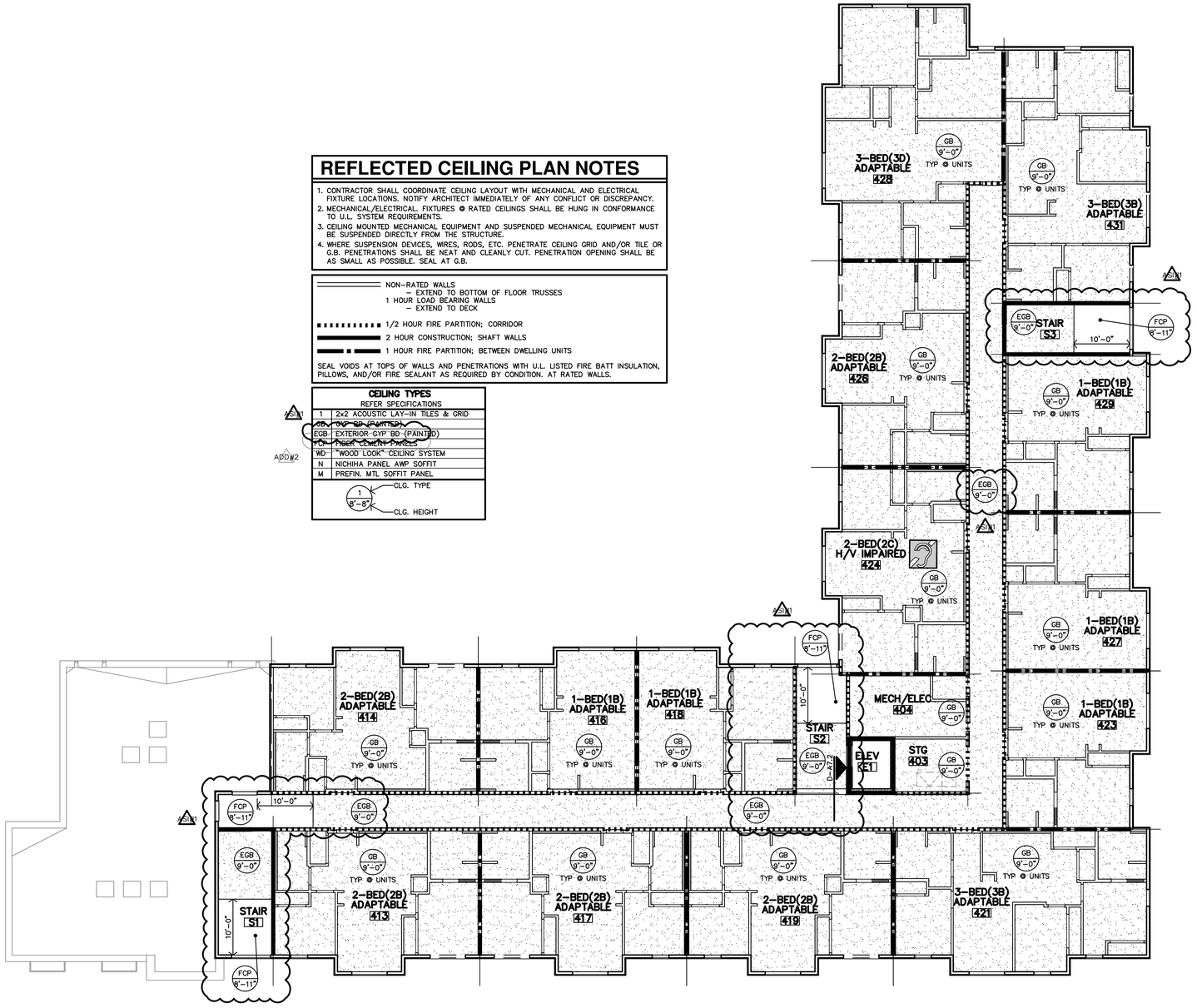

A FOURTH FLOOR REFLECTED CEILING PLAN
3/32"=1'-0"

Reviewed for Code Compliance
Josh Hamlin
04/30/2025

JonesGillamRenz
730 N. Ninth
Salina, KS 67401
785.827.0386
1881 Main Street, Suite 301
Kansas City, MO 64108
jgr@jgrarchitects.com

THE RESERVES at MAGNOLIA

NEW APARTMENT COMPLEX

DENTON, TEXAS

REGISTERED ARCHITECT JEFFREY S. GILLAM 5-17-2023 22418 STATE OF TEXAS

REVISION:	
ADD#1	6-19-2023
ADD#2	9-8-2023
#1	7-22-2024
DATE:	5-17-2023
JOB:	21-3205
SHEET NO.:	

A7.4

COPYRIGHTED ©

CASEWORK NOTES

1. PLASTIC LAMINATE ON ALL EXPOSED SURFACES UNLESS NOTED OTHERWISE.
2. PLASTIC LAMINATE AT ALL EXPOSED EDGES UNLESS NOTED OTHERWISE.
3. ENTIRE CABINET DOOR (INTERIOR & EXTERIOR) TO BE PLASTIC LAMINATE.
4. INTERIOR UNEXPOSED SURFACES TO BE "BLACK" MELAMINE UNLESS NOTED OTHERWISE.
5. COUNTERTOPS & BACKSPLASHES TO BE PLASTIC LAMINATE W/ EASED EDGES.
6. PROVIDE ALL NECESSARY FILLERS OF MATCHING MATERIALS. INSTALL CONTINUOUS FINISH FLOORING BASE @ CASEWORK TOEKICK.
7. ALL ADJUSTABLE SHELVING SHALL BE 3/4" THICK MATERIAL.
8. ALL ADJUSTABLE UNEXPOSED MELAMINE SHELVING SHALL HAVE ALL FOUR EDGES TAPED.
9. EXPOSED ADJUSTABLE SHELVING SHALL HAVE FULL THICKNESS PLASTIC LAMINATE AT ALL EXPOSED SURFACES AND ALL FOUR EDGES. TAPE IS NOT ACCEPTABLE.
10. COUNTERTOPS SHALL RECEIVE 1½"W x 3mm EDGE BAND.
11. ALL UPPER CABINETS SHALL HAVE (2) ADJUSTABLE SHELVES PER EACH, UNLESS NOTED OTHERWISE.
12. REFERENCE ELEVATIONS FOR NUMBER OF ADJUSTABLE SHELVES AT LOWER CABINET UNITS.
13. STAINING AND PAINTING OF ALL HARDWOOD TRIM SHALL BE PER THE PAINTER.
14. MULTIPLE LAMINATES (PREMIUM FINISHES AS WELL) WILL BE SELECTED BY ARCHITECT.
15. CABINETS TO BE FLUSH OVERLAY UNLESS NOTED OTHERWISE.
16. PROVIDE BLOCKING BEHIND WALL FOR SUPPORT OF CABINETRY.
17. PROVIDE & INSTALL ANGLE SUPPORT BRACKETS WHERE COUNTERTOP SPAN EXCEEDS 48" IN WIDTH.

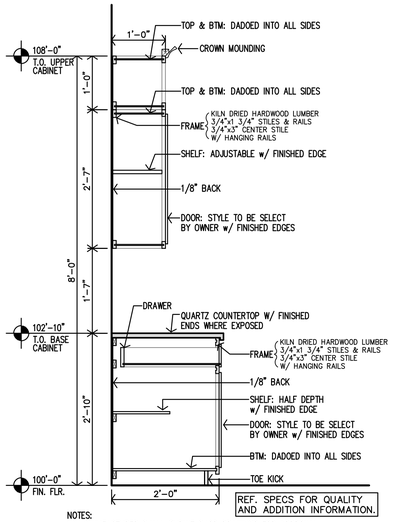

NOTES:
1. MANUFACTURER SHALL SUBMIT SHOP DRAWINGS FOR APPROVAL.
2. MANUFACTURER SHALL PROVIDE ALL FILLERS/BRACES TO MATCH CABINETS.
3. QUARTZ COUNTERTOP – SILICONE SEALANT TYP @ MATERIAL TRANSITIONS

J COMMUNITY ROOM #106 CASEWORK SECTION
3/8"=1'-0"

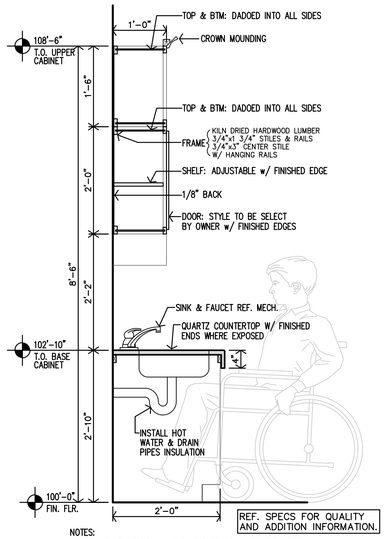

NOTES:
1. MANUFACTURER SHALL SUBMIT SHOP DRAWINGS FOR APPROVAL.
2. MANUFACTURER SHALL PROVIDE ALL FILLERS/BRACES TO MATCH CABINETS.
3. QUARTZ COUNTERTOP – SILICONE SEALANT TYP @ MATERIAL TRANSITIONS

H COMMUNITY ROOM #106 CASEWORK SECTION
3/8"=1'-0"

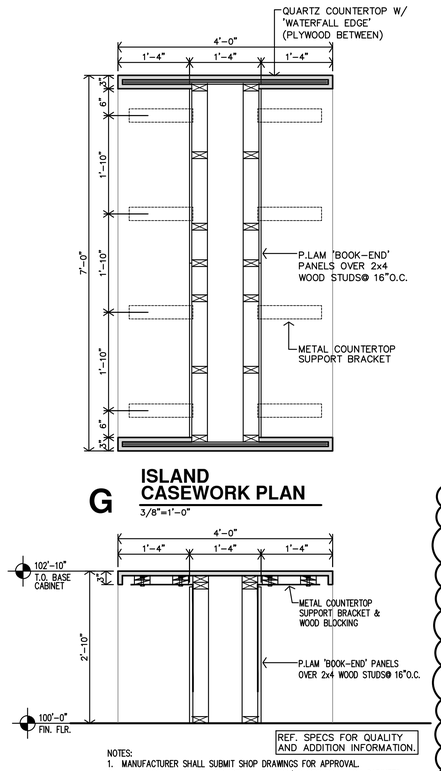

NOTES:
1. MANUFACTURER SHALL SUBMIT SHOP DRAWINGS FOR APPROVAL.
2. MANUFACTURER SHALL PROVIDE ALL FILLERS/BRACES TO MATCH CABINETS.
3. QUARTZ COUNTERTOP – SILICONE SEALANT TYP @ MATERIAL TRANSITIONS

F ISLAND CASEWORK SECTION
3/8"=1'-0"

G ISLAND CASEWORK PLAN
3/8"=1'-0"

E DETAIL NOT USED

D DETAIL NOT USED

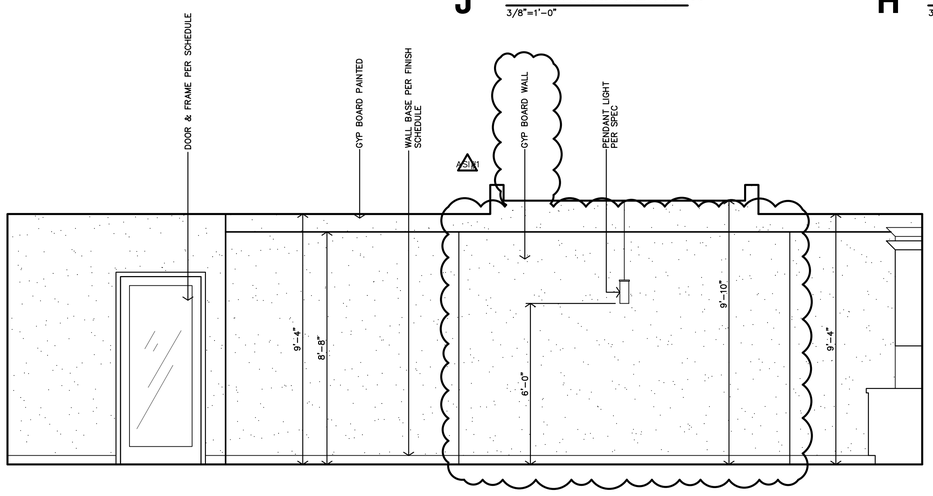

C COMMUNITY ROOM #106 INTERIOR ELEVATION
3/8"=1'-0"

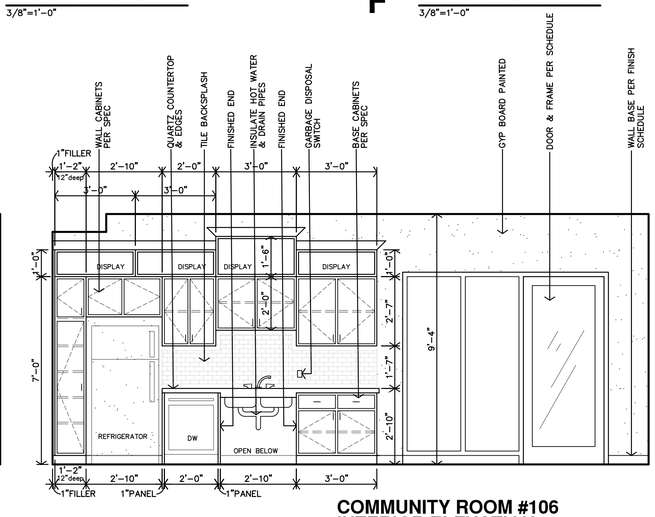

B COMMUNITY ROOM #106 INTERIOR ELEVATION
3/8"=1'-0"

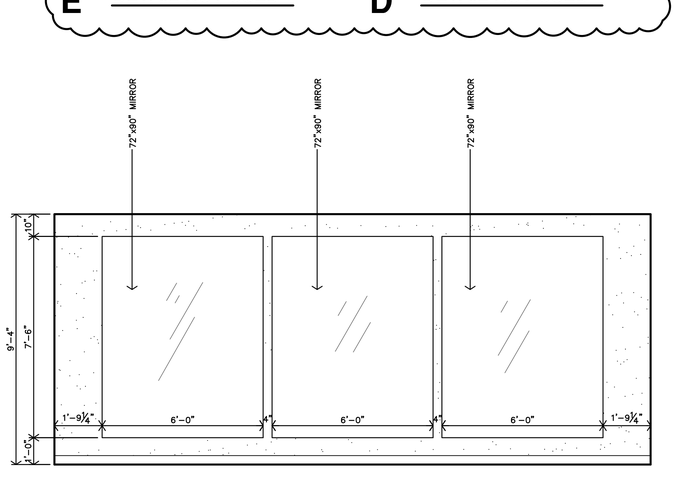

A FITNESS #102 INTERIOR ELEVATION
3/8"=1'-0"

Reviewed for Code Compliance
Josh Hamlin
04/30/2025

JonesGillamRenz
730 N. Ninth
Salina, KS 67401
1881 Main Street, Suite 301
Kansas City, MO 64108
785.827.0386
jgr@jgrarchitects.com

THE RESERVES at MAGNOLIA

NEW APARTMENT COMPLEX

DENTON, TEXAS

REGISTERED ARCHITECT
STATE OF TEXAS
5-17-2023
52415

REVISION:	
ADDN'2	9-8-2023
A5.1	7-22-2024
DATE:	5-17-2023
JOB:	21-3205
SHEET NO.:	

A8.2

COPYRIGHTED ©

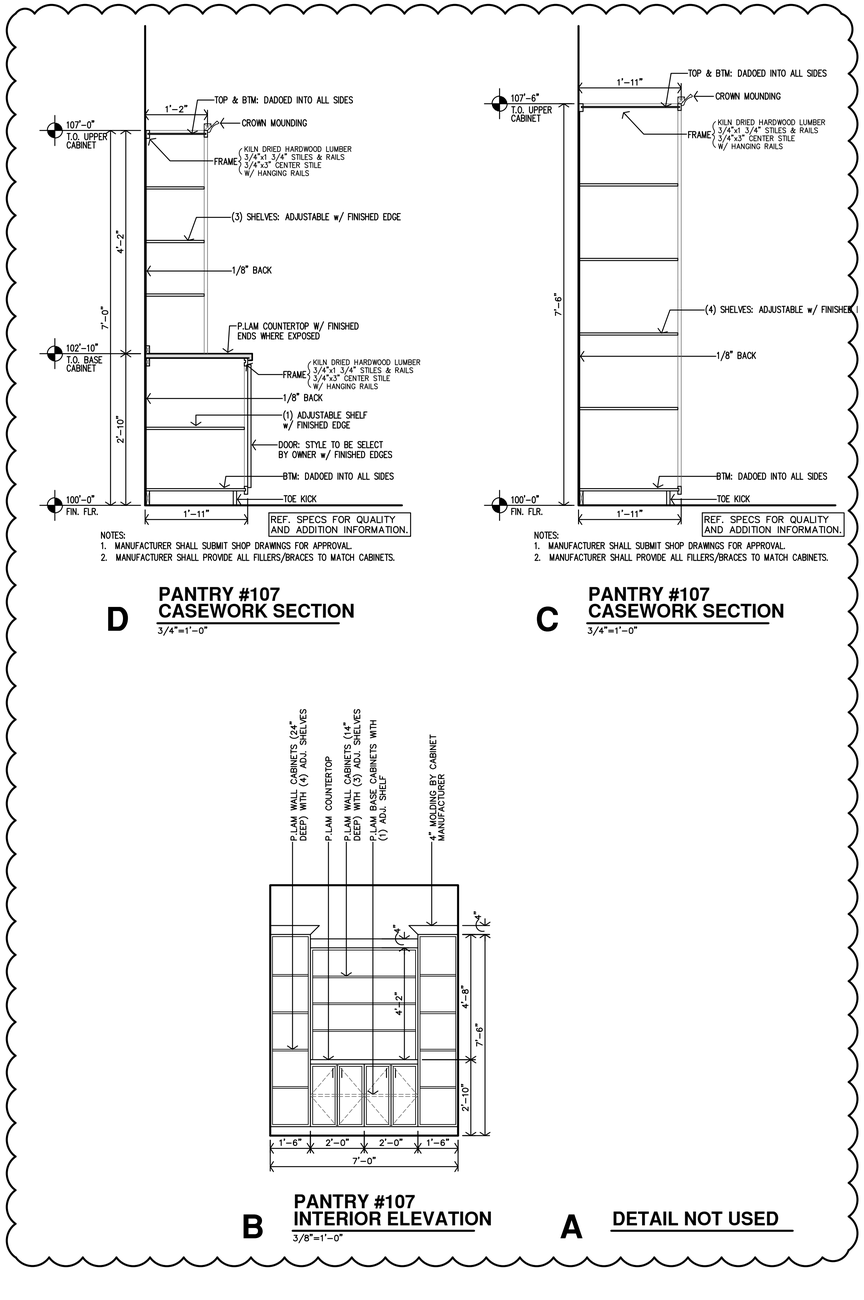

Reviewed for Code Compliance
Josh Hamlin
04/30/2025

JonesGillamRenz
730 N. Ninth
Salina, KS 67401
785.827.0386
1881 Main Street, Suite 301
Kansas City, MO 64108
jgr@jgrarchitects.com

THE RESERVES at MAGNOLIA

NEW APARTMENT COMPLEX

DENTON, TEXAS

REVISION:
1 7-22-2024

DATE: 5-17-2023
JOB: 21-3205
SHEET NO.:

A8.3

COPYRIGHTED ©

APARTMENT DOOR SCHEDULE - 60 UNITS - REF. SHEETS A2.5-A2.14

MARK	DOOR SIZE W	DOOR SIZE H	DOOR SIZE T	DOOR MATERIAL MTL. INSULATED	DOOR MATERIAL WOOD H.C.	DOOR MATERIAL WOOD LOUVER		DOOR TYPE TYPE	DOOR TYPE BI-FOLD	DOOR TYPE BI-PASS	DOOR TYPE POCKET	DOOR FINISH PAINT	DOOR FINISH PRE-PRIMED		FRAME MAT'L HOLLOW METAL	FRAME MAT'L WOOD	FRAME MAT'L PVC COMPOSITE	FRAME FINISH PAINT	FRAME FINISH PRE-PRIMED	FRAME FINISH GYP. BD.		RATING	DETAILS	NOTES
1	3'-0"	6'-8"	1 3/8"	●				A				●	●				1					20min	D/E-A10.2	NOTES 1,2,3,4,5
2	3'-0"	6'-8"	1 3/8"		●			B					●			2							F/G-A10.2	NOTES 6,7
3	3'-0"	6'-8"	1 3/8"		●						B		●			2							H/J-A10.2	NOTES 7,8
4	PR3'-0"	6'-8"	1 3/8"		●					B			●			2							K/L-A10.2 SIM	
6	(4)1'-3"	6'-8"	1 3/8"		●	●			C				●			2							K-A10.2	
7	(2)2'-0"	6'-8"	1 3/8"		●	●			E				●			2							K-A10.2	
8	2'-6"	6'-8"	1 3/8"		●	●		B					●			2							F/G-A10.2	
9	(4)1'-3"	6'-8"	1 3/8"		●				D				●			2							K-A10.2	

ADD#2 ASI#1 ADD#2

GENERAL NOTES:

A. ALL DOOR HARDWARE TO BE LEVER TYPE LATCH SETS. PROVIDED & INSTALLED PER SPECIFICATIONS SEC. 8710
B. CONTRACTOR TO REVIEW AND ENSURE THE FOLLOWING ITEMS AND STATUTES HAVE BEEN MET;
http://tx.elaws.us/law/pr_title8_chapter92_sec.92.153
(1) window latch on each exterior window of dwelling;
(2) doorknob lock or keyed dead bolt on each exterior door;
(3) sliding door pin lock on each exterior sliding glass door;
(4) handle latch or security bar on each exterior sliding glass door;
(5) keyless bolting device and a door viewer on each exterior door.
C. ALL SIGNAGE TO HAVE BRAILLE/TACTILE SURFACE.

SPECIFIC NOTES:

1. ENTRY DOOR – HARDWARE TO BE LEVER TYPE LATCH SETS, KEYED OUTSIDE & RELEASE INSIDE LOCKSET & DEADBOLT W/ THUMB TURN INSIDE & NO KEY OUTSIDE W/ 1" MIN THROW. COORDINATE W/ MFR. FOR ADA INSTALLATION REQUIREMENTS. COORDINATE KEYING REQUIREMENTS WITH OWNER. WEATHER STRIPPING TO BE INSTALLED.
2. NOISE THRESHOLD TO NOT EXCEED CODE VALUES FOR DWELLING TO CORRIDOR RATING.
3. ENTRY DOOR – 180° PEEP HOLES at STANDARD/ADAPTABLE UNITS: (1) PEEP HOLE TO BE INSTALLED @ 60"AFF.
4. ENTRY DOOR – 180° PEEP HOLES at ACCESSIBLE UNITS: (2) PEEP HOLES TO BE INSTALLED @ 43"AFF & 60"AFF.
5. ENTRY DOOR – WEATHER STRIPPING TO BE INSTALLED.
6. BEDROOM & BATH DOORS – HARDWARE TO BE PRIVACY LEVER TYPE LATCH SET.
7. BEDROOM & BATH DOORS – UNDERCUT DOORS PER MECH DWGS 1" TYP.
8. POCKET DOOR – 32" MIN CLEAR OPENING, w/ ADA COMPLIANT HANDLE SIMILAR TO TRIMCO SERIES 69.

PUBLIC DOOR SCHEDULE

MARK	DOOR SIZE W	DOOR SIZE H	DOOR SIZE T	DOOR MATERIAL ALUMINUM	DOOR MATERIAL INSULATED METAL	DOOR MATERIAL S.C. WOOD	DOOR MATERIAL PREFIN. METAL	DOOR TYPE	DOOR FINISH PREFINISHED	DOOR FINISH PAINT	FRAME MATERIAL ALUMINUM	FRAME MATERIAL HOLLOW METAL	FRAME MATERIAL WOOD	FRAME MATERIAL PREFIN. METAL	FRAME MATERIAL PVC COMPOSITE	FRAME TYPE	FRAME FINISH PREFINISHED	FRAME FINISH PAINT	RATING	HARDWARE CARD ACCESS	HARDWARE PANIC HARDWARE	HARDWARE SMOKE GASKET	HARDWARE WEATHER-STRIPING	DETAILS
FIRST FLOOR																								
101	3'-0"	7'-0"	1 3/4"	●				J	●		●					5	●			●	●			H/K/J-A10.3
102	3'-0"	7'-0"	1 3/4"			●		J		●		●				1		●		●	●			L-A10.3
103	3'-0"	7'-0"	1 3/4"			●		B		●		●				1		●						A/B-A10.3
104	3'-0"	7'-0"	1 3/4"			●		L		●					●	1		●	20 Min		●			M-A10.3
105	3'-0"	7'-0"	1 3/4"		●			L		●		●				1		●	90 Min			●		T/U-A10.3
106	3'-0"	7'-0"	1 3/4"			●		B		●		●				1		●						A/B-A10.3
107	3'-0"	7'-0"	1 3/4"			●		J		●		●				7		●		●	●		●	L-A10.3
108	3'-6"	8'-0"	1 3/4"			●		H	●		●					4	●				●		●	P-A10.3
109	3'-0"	7'-0"	1 3/4"			●		J		●		●				1		●						L-A10.3
111	3'-0"	7'-0"	1 3/4"			●		J		●		●				6		●						L-A10.3
112	3'-0"	7'-0"	1 3/4"			●		J		●		●				6		●						L-A10.3
113	PR 3'-0"	7'-0"	1 3/4"		●			K		●					●	1		●	20 Min			●		E/F/G-A10.3
114																								
116																								
117	PR 3'-0"	7'-0"	1 3/4"		●			K		●		●				1		●	90 Min			●		C/D-A10.3
118	4'-0"	7'-0"	1 3/4"		●			K		●					●	1		●	20 Min			●		E/F/G-A10.3
119	3'-0"	7'-0"	1 3/4"		●			K		●					●	1		●	20 Min			●		E/F/G-A10.3
120	3'-0"	7'-0"	1 3/4"		●			K		●		●				1		●	20 Min			●		E/F/G-A10.3
121																								
122																								
123	PR 3'-0"	7'-0"	1 3/4"		●			K		●		●				9		●					●	N-A10.3
124	3'-0"	7'-0"	1 3/4"		●			L		●		●				1		●	90 Min			●		T/U-A10.3
SECOND FLOOR																								
201	PR 3'-0"	6'-8"	1 3/4"		●			K		●					●	1		●	20 Min			●		E/F/G-A10.3
202	4'-0"	6'-8"	1 3/4"		●			K		●					●	1		●	20 Min			●		E/F/G-A10.3
203	3'-0"	6'-8"	1 3/4"		●			K		●					●	1		●	20 Min			●		E/F/G-A10.3
204	3'-0"	7'-0"	1 3/4"		●			L		●		●				1		●	90 Min			●		T/U-A10.3
206	3'-0"	7'-0"	1 3/4"		●			L		●		●				1		●	90 Min			●		T/U-A10.3
THIRD FLOOR																								
301	PR 3'-0"	6'-8"	1 3/4"		●			K		●					●	1		●	20 Min			●		E/F/G-A10.3
302	4'-0"	6'-8"	1 3/4"		●			K		●					●	1		●	20 Min			●		E/F/G-A10.3
303	3'-0"	6'-8"	1 3/4"		●			K		●					●	1		●	20 Min			●		E/F/G-A10.3
304	3'-0"	7'-0"	1 3/4"		●			L		●		●				1		●	90 Min			●		T/U-A10.3
306	3'-0"	7'-0"	1 3/4"		●			L		●		●				1		●	90 Min			●		T/U-A10.3
FOURTH FLOOR																								
401	PR 3'-0"	7'-0"	1 3/4"		●			K		●					●	1		●	20 Min			●		E/F/G-A10.3
402	4'-0"	7'-0"	1 3/4"		●			K		●					●	1		●	20 Min			●		E/F/G-A10.3
403	3'-0"	6'-8"	1 3/4"		●			K		●					●	1		●	20 Min			●		E/F/G-A10.3
404	3'-0"	7'-0"	1 3/4"		●			L		●		●				1		●	90 Min			●		T/U-A10.3
406	3'-0"	7'-0"	1 3/4"		●			L		●		●				1		●	90 Min			●		T/U-A10.3
ELEVATOR																								
E1	3'-6"	7'-0"					●							●			●		90 Min			●		REF. SHEETS A6.1 & A6.4
E2	3'-6"	7'-0"					●							●			●		90 Min			●		REF. SHEETS A6.1 & A6.4
E3	3'-6"	7'-0"					●							●			●		90 Min			●		REF. SHEETS A6.1 & A6.4
E4	3'-6"	7'-0"					●							●			●		90 Min			●		REF. SHEETS A6.1 & A6.4

ADD#1 ASI#1

NOTES:
1. ALL EXPOSED LINTELS TO BE PAINTED AT INTERIOR AND EXTERIOR.
2. CONTRACTOR MUST INSTALL MTL. FLASHINGS & CONT. CAULK FOR A WEATHER & WATERTIGHT CONDITIONS @ ALL EXTERIOR DOORS & DOOR FRAMES/UNITS.
3. INSTALL ALUMINUM THRESHOLD/EXPANSION JOINT COVER BETWEEN CONCRETE AND WOOD FLOORS.
4. ALL SIGNAGE TO HAVE BRAILLE/TACTILE SURFACE.

GLAZING SCHEDULE

MARK	INTERIOR	EXTERIOR	1/4"	3/4" INSULATED	TINTED	TEMPERED
A1		●		●	●	●
A2		●		●	●	
B1	●		●			●

REF. SPECIFICATIONS FOR ADDITIONAL REQUIREMENTS

IECC 2021 REQUIREMENTS

FENESTRATION
U-FACTOR
FIXED FENSTRATION .42
OPERABLE FENSTRATION .54
ENTRANCE DOOR .68

SHGC	FIXED	OPERABLE
PF < .25	.25	.23
.25 ≤ PF < .5	.30	.28
PF ≥ .5	.40	.37

WINDOW SCHEDULE

MARK	WIDTH	HEIGHT	STYLE	INTERIOR	EXTERIOR	DETAILS
A	6'-4"	6'-0"	SINGLE HUNG		●	Q/R/S-A10.3
B	3'-0"	6'-0"	SINGLE HUNG		●	Q/R/S-A10.3
~~C~~	~~11'-0"~~	~~8'-10"~~	~~ALUM. STOREFRONT SYSTEM~~		●	~~H-A10.3~~
~~D~~	~~8'-4"~~	~~8'-10"~~	~~ALUM. STOREFRONT SYSTEM~~		●	~~H-A10.3~~
E	4'-2"	8'-10"	ALUM. STOREFRONT SYSTEM		●	H-A10.3
~~F~~	~~6'-8"~~	~~4'-2"~~	~~ALUM. STOREFRONT SYSTEM~~	●		~~G-A10.3~~

ASI#1

NOTES:
1. CONTRACTOR MUST INSTALL MTL. FLASHINGS & CONT. CAULK FOR A WEATHER & WATERTIGHT CONDITIONS @ ALL EXTERIOR WINDOW UNITS.
2. CONTRACTOR MUST INSTALL 1/4" INSUL. OR THERMAL BREAK. CONTINUOUS AROUND WINDOW.
3. CONTRACTOR TO PROVIDE & INSTALL MANUFACTURERS COORDINATING PANNING SYSTEM FOR ALUM. WINDOWS.
4. WINDOWS A & B MUST BE SIZED TO MEET EGRESS REQUIREMENTS.
5. ALL OPERABLE WINDOWS W/ THE SILL 6'-0" ABOVE GRADE, SHALL BE PROVIDE W/ WINDOW OPENING CONTROL DEVICE PER ASTM 2090 & 2021 IBC SEC. 1015.8.1
6. PROVIDE & INSTALL SAFETY GLASS AT HAZARDOUS LOCATIONS, PER 2021 IBC CODE 2406. IN DOORS, ADJACENT & WITHIN 24" TO DOORS, LESS THAN 18" ABV FLOOR, IN GUARDS & HANDRAILS, ADJACENT TO STAIRS AND RAMPS, STAIRS AND RAMPS.
7. ALL OPERABLE WINDOWS SHALL HAVE INSECT SCREENS.

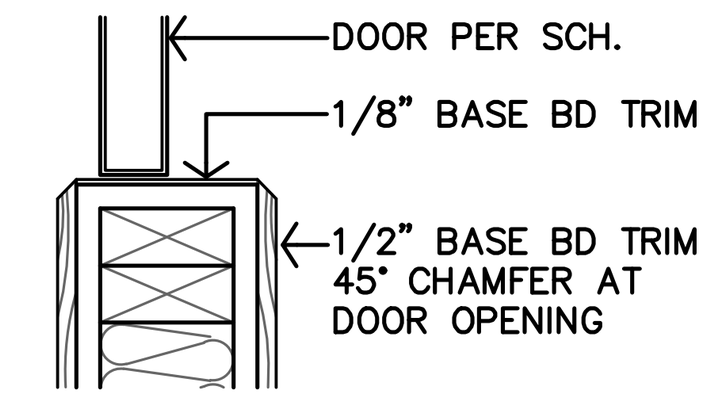

L UNIT BASE DETAIL @ BI-PASS DOOR
1 1/2"=1'-0"

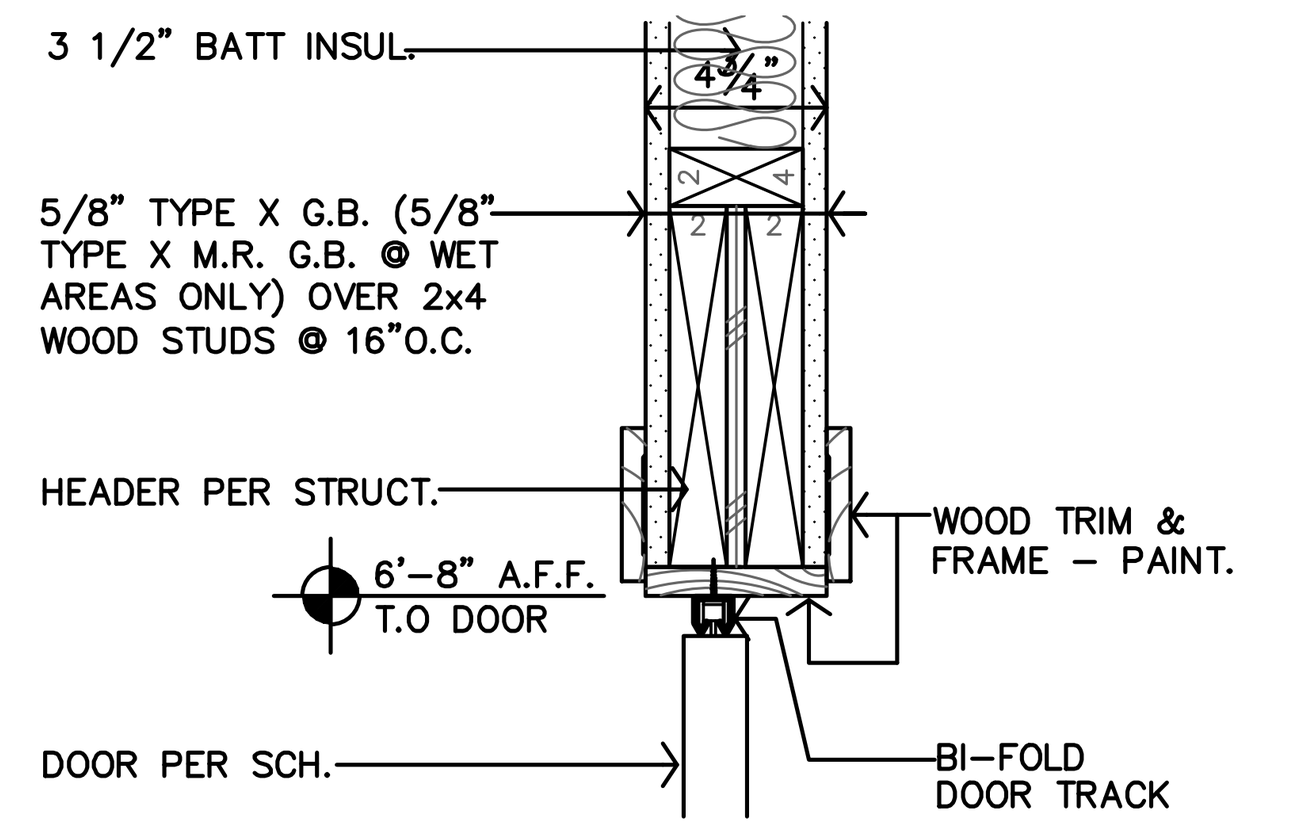

K UNIT HEAD DETAIL @ BI-FOLD DOOR
1 1/2"=1'-0" BI-PASS SIMILAR

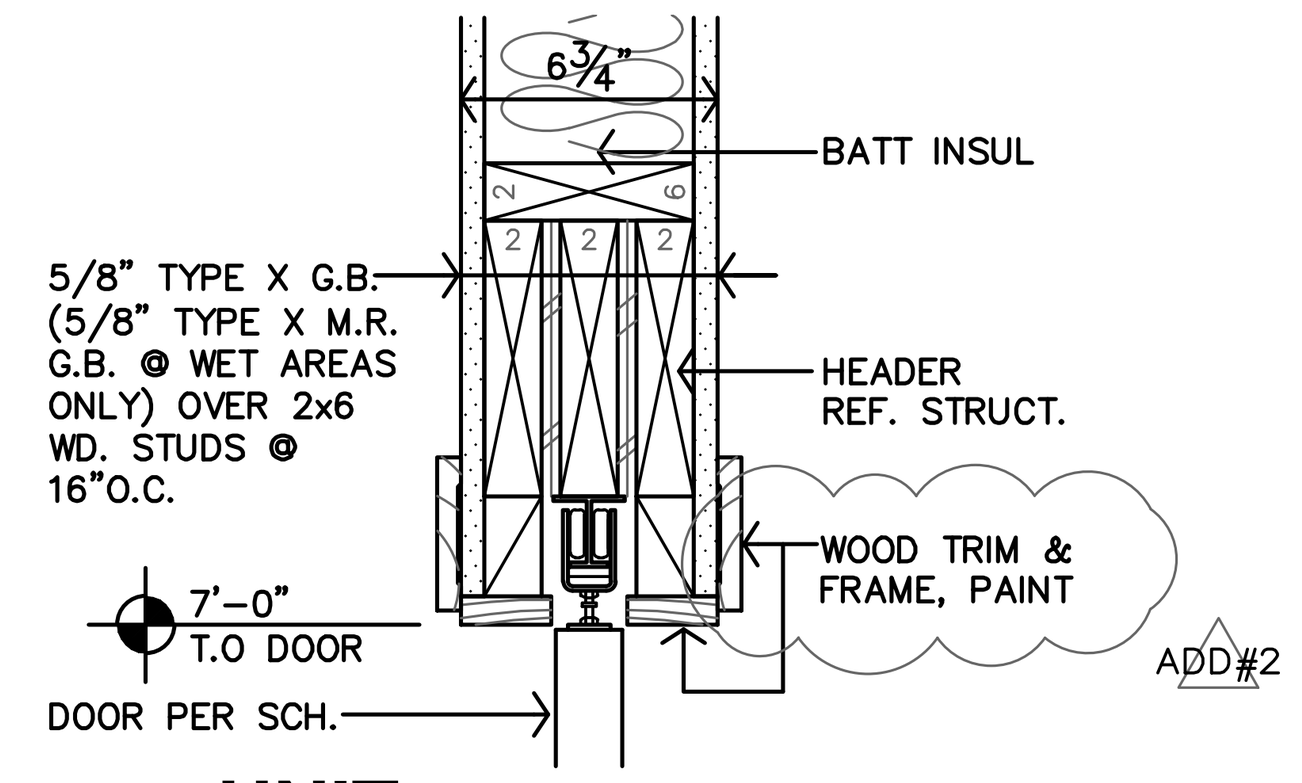

J UNIT POCKET DOOR HEAD DTL.
1 1/2"=1'-0"

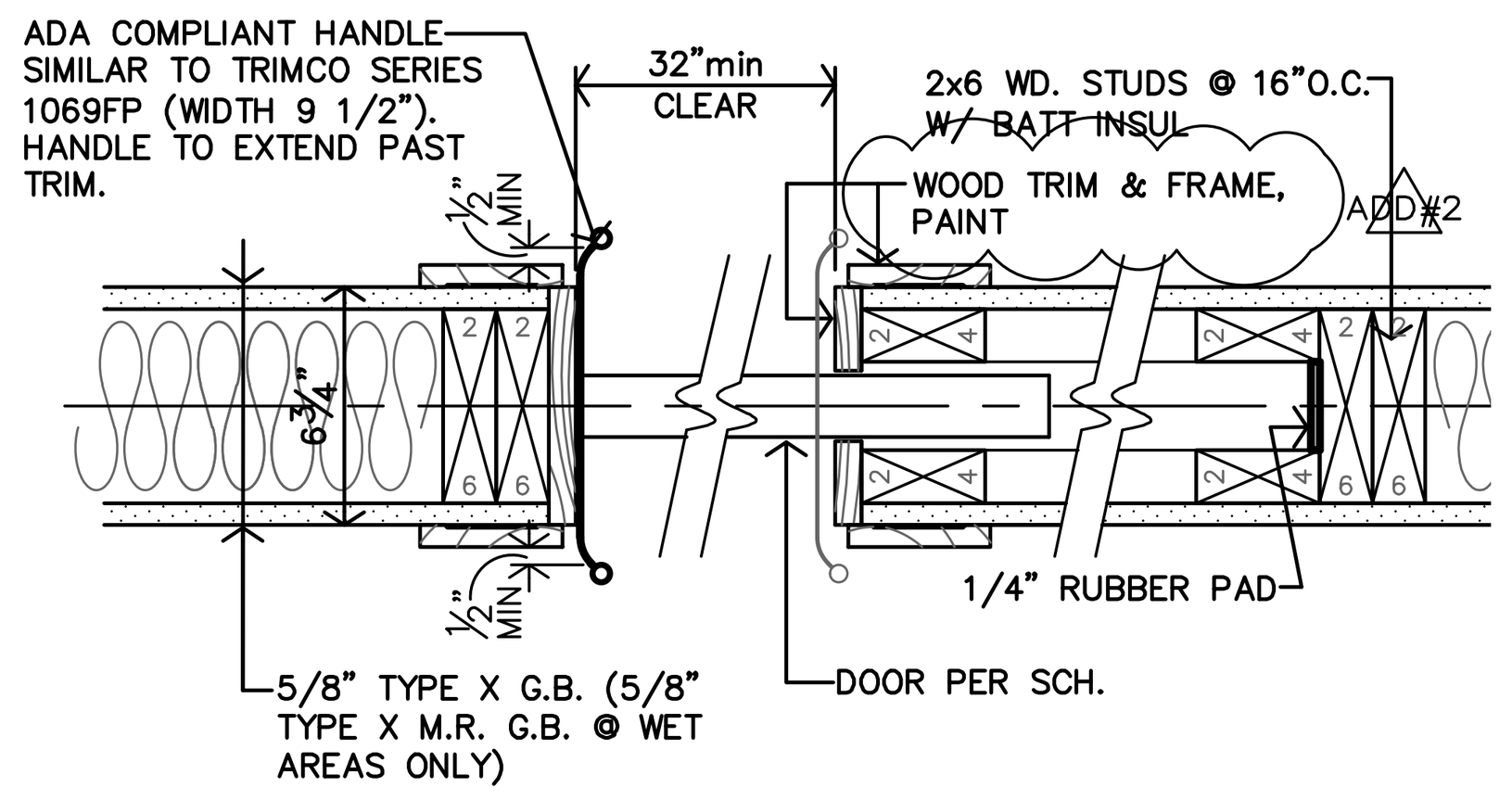

H UNIT POCKET DOOR JAMB DTL.
1 1/2"=1'-0"

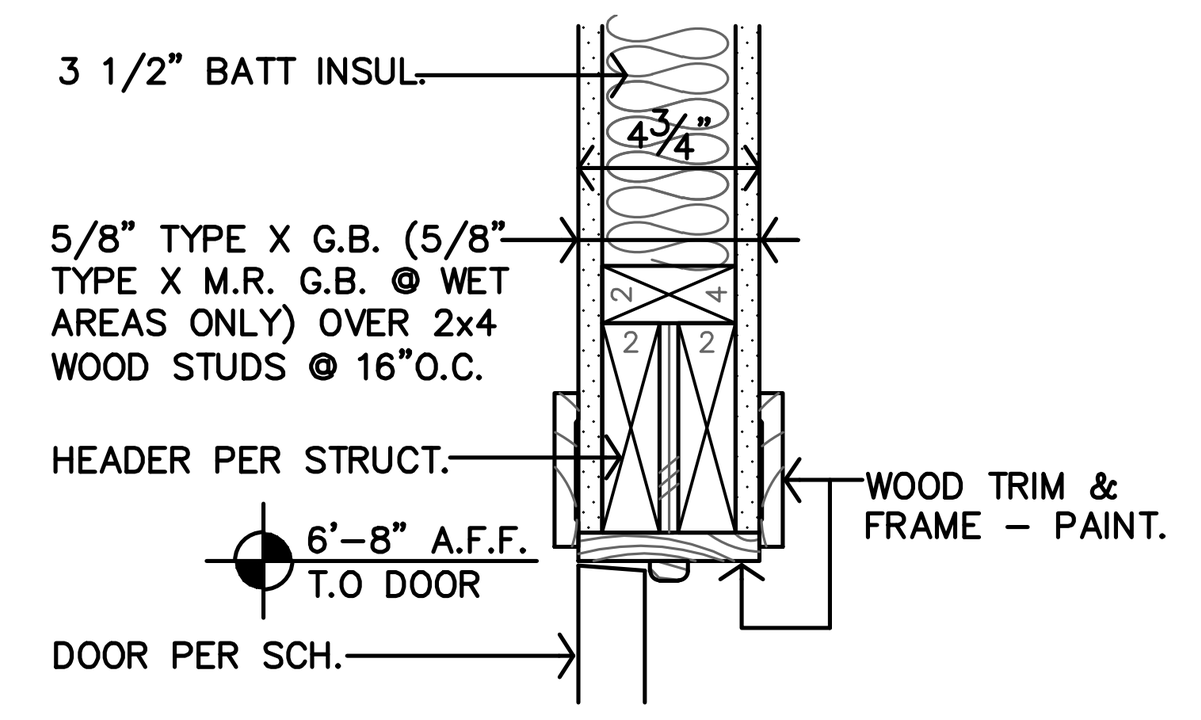

G UNIT DOOR HEAD DTL.
1 1/2"=1'-0"

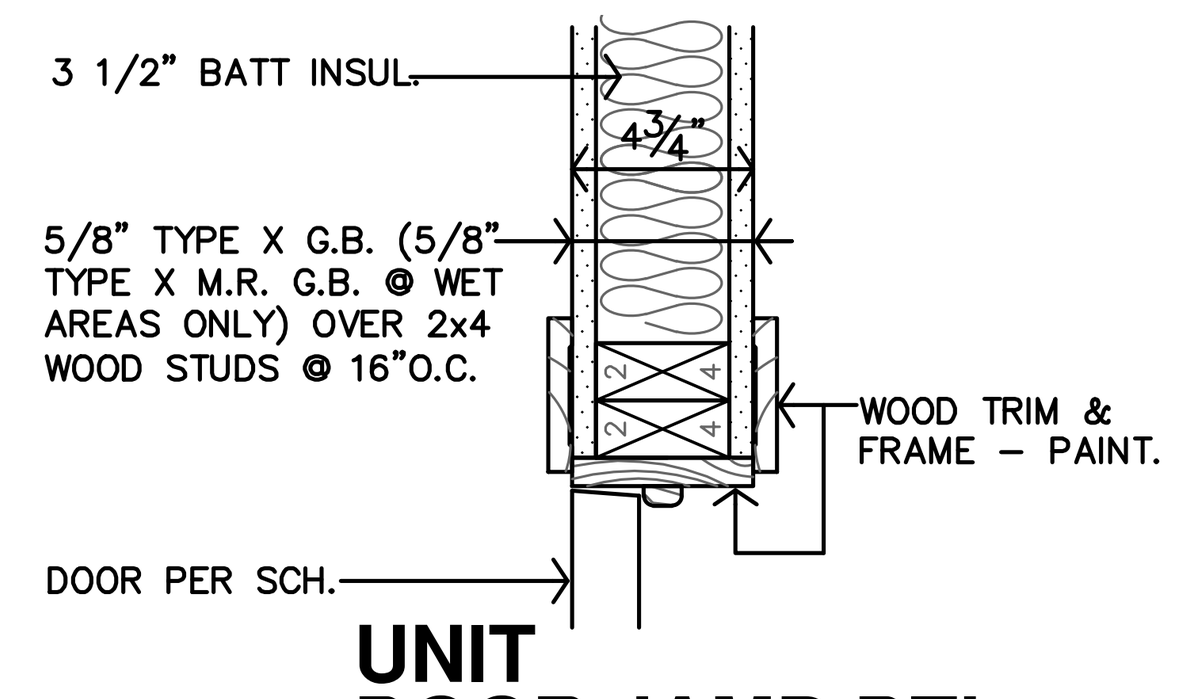

F UNIT DOOR JAMB DTL.
1 1/2"=1'-0"

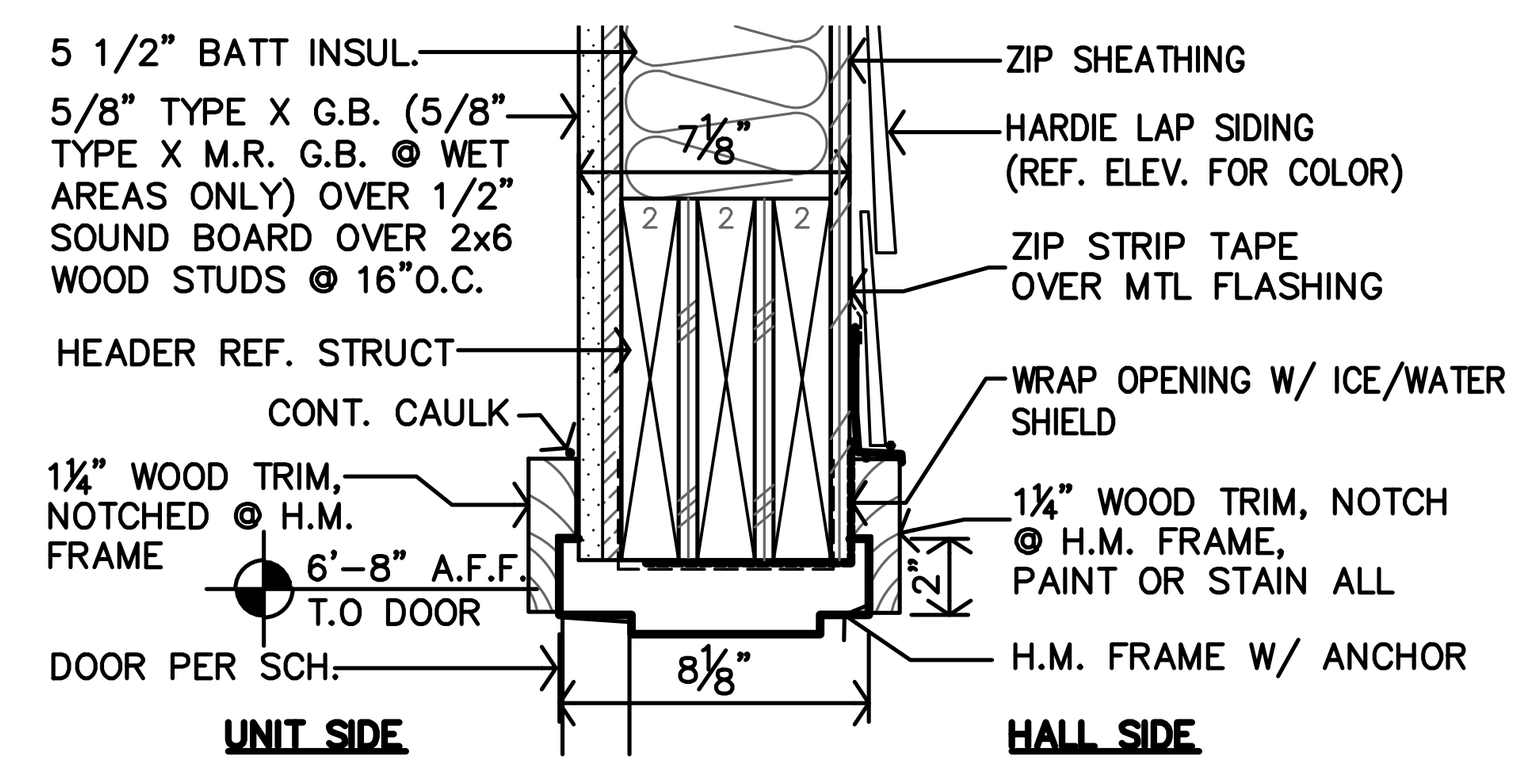

E UNIT DOOR HEAD DTL.
1 1/2"=1'-0"

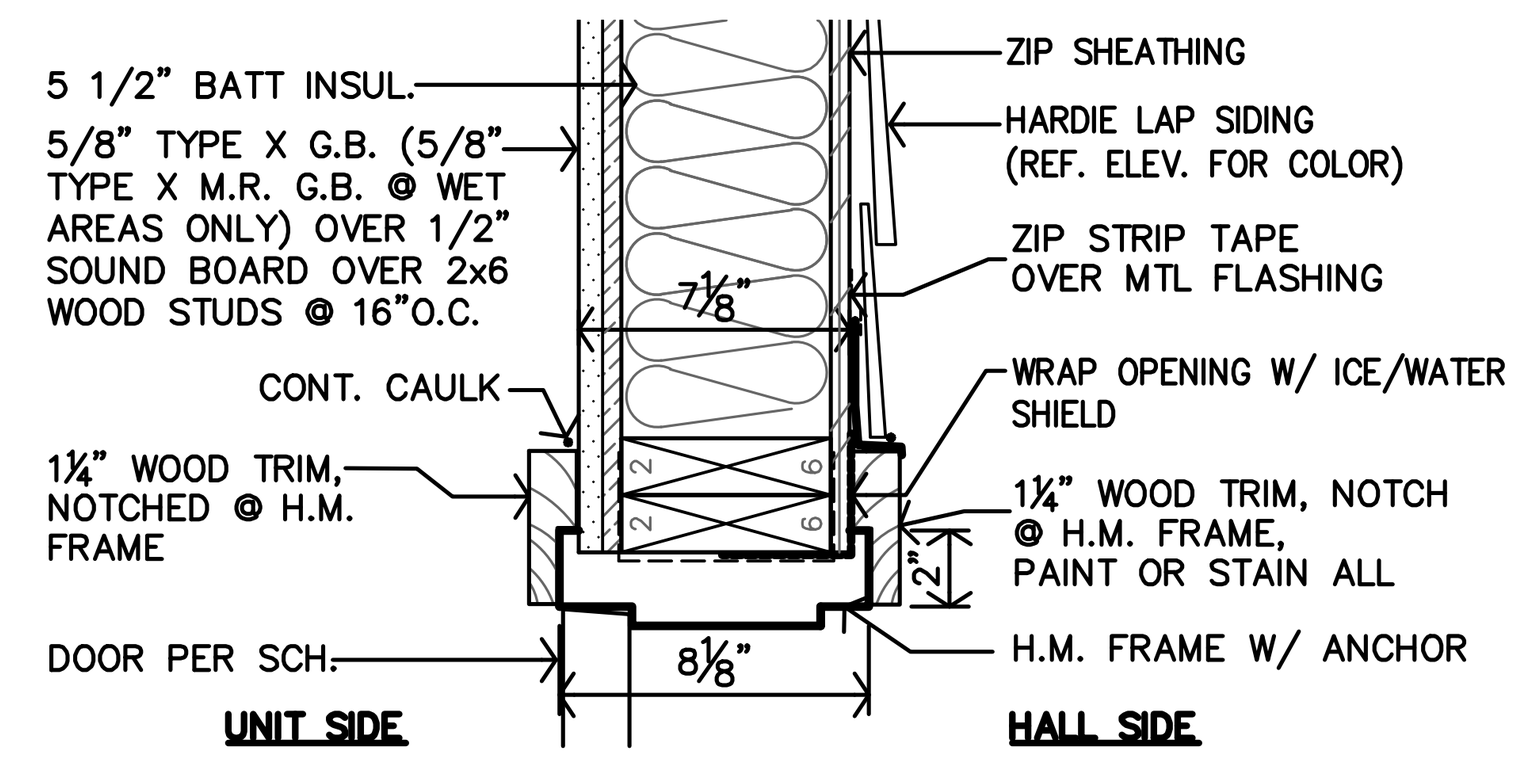

D UNIT DOOR JAMB DTL.
1 1/2"=1'-0"

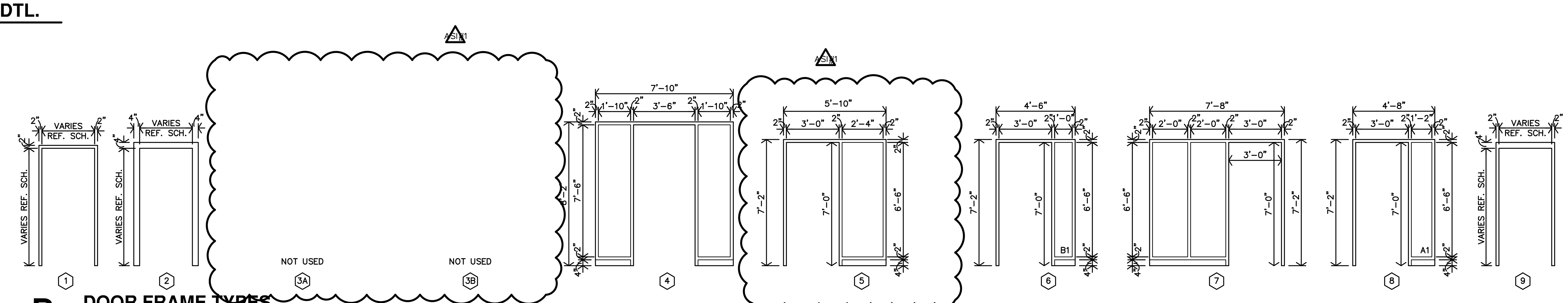

B DOOR FRAME TYPES
1/4"=1'-0"

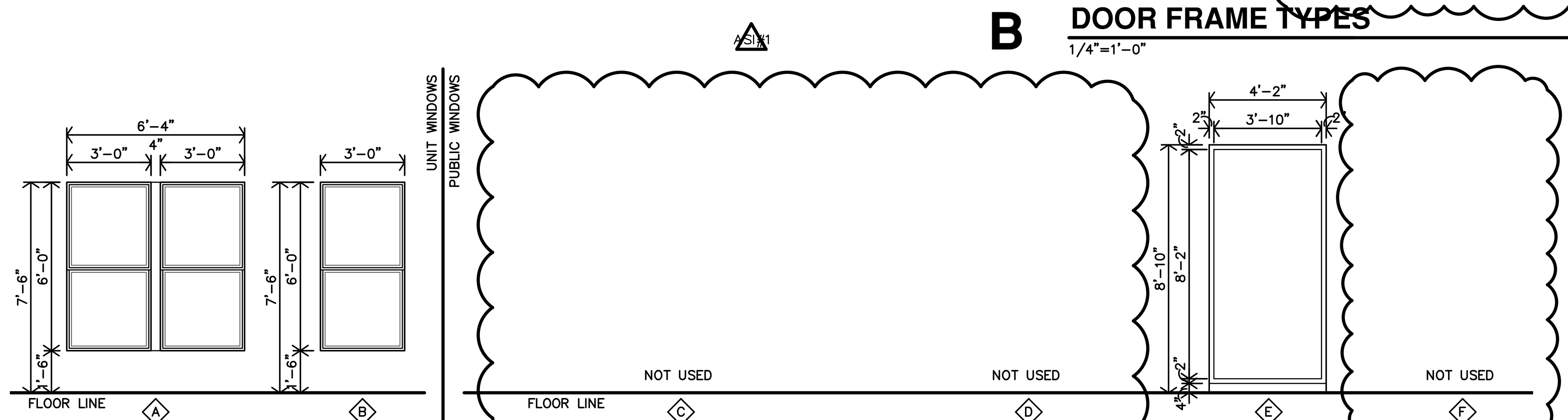

C WINDOW TYPES
1/4"=1'-0"

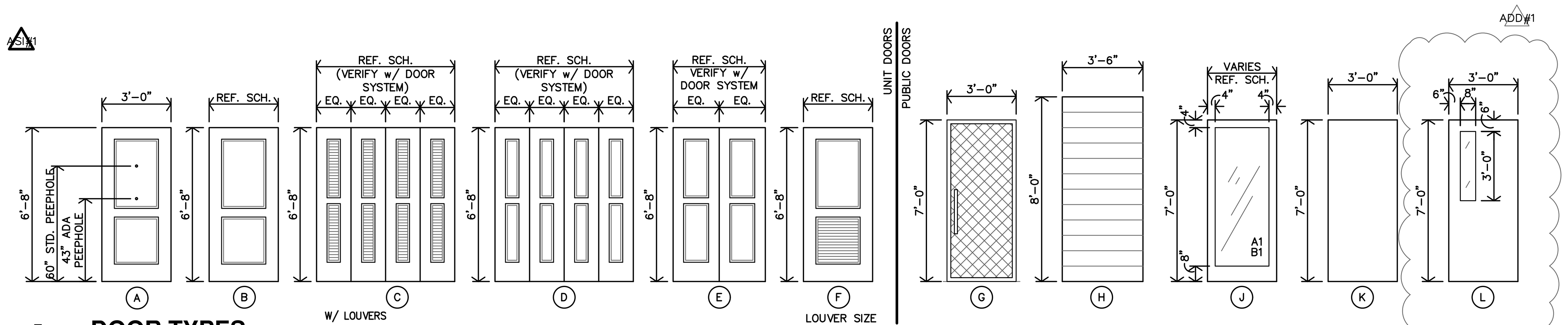

A DOOR TYPES
1/4"=1'-0"

JonesGillamRenz
730 N. Ninth
Salina, KS 67401
785.827.0386
1881 Main Street, Suite 301
Kansas City, MO 64108
jgr@jgrarchitects.com

THE RESERVES at MAGNOLIA
NEW APARTMENT COMPLEX
DENTON, TEXAS

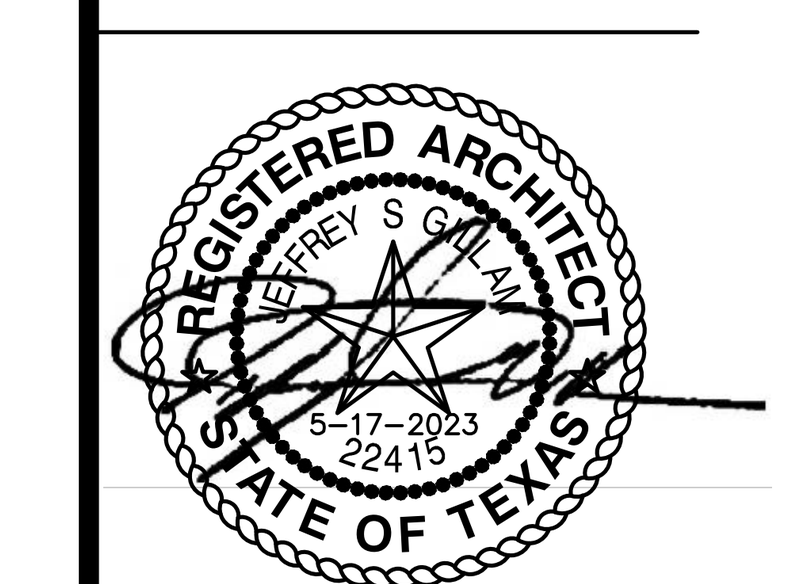

REVISION:	
ADD#1	6-19-2023
ADD#2	9-8-2023
ASI#1	7-22-2024
DATE:	5-17-2023
JOB:	21-3205
SHEET NO.:	A10.2

COPYRIGHTED ©

Reviewed for Code Compliance
Josh Hamlin
04/30/2025

(#) ROOF PLAN NOTES BY SYMBOL

1. MOUNT CONDENSING UNIT TO UNISTRUT FRAME SUPPORTED ON NVENT CADDY PYRAMID ROOF SUPPORTS OR RUBBER CONDENSING UNIT PAD. PROVIDE VIBRATION ISOLATORS BETWEEN ROOF SUPPORTS AND UNISTRUT FRAME. COORDINATE INSTALLATION WITH ROOFING CONTRACTOR.
2. REFRIGERANT PIPING THROUGH ROOF TO MATCHING BLOWER COIL. PROVIDE PIPING PENETRATION ASSEMBLY EQUAL TO RPH AW SERIES ROOF VAULT WITH EXIT SEALS FOR REFRIGERANT PIPING AND ELECTRICAL CONDUIT AND TWO ADDITIONAL SPARE EXIT SEALS. SUBMIT PRODUCT DATA FOR REVIEW PRIOR TO INSTALLATION.
3. 3" PLUMBING VENT THROUGH ROOF.
4. UNLESS NOTED OTHERWISE, PROVIDE 30A/2P, NON-FUSED DISCONNECT SWITCH IN NEMA 3R ENCLOSURE AND MAKE FINAL CONNECTION TO EQUIPMENT IN LFMC RACEWAY. MOUNT TO UNISTRUT FRAME SUPPORTED FROM EQUIPMENT SUPPORT RAILS. PANEL OF ORIGIN NUMBER SHOWN ON HOMERUN TAG INDICATES UNIT BEING SERVED.
5. MOUNT RECEPTACLES TO UNITSTRUT FRAME SUPPORTED FROM CONDENSING UNIT UNISTRUT FRAME.
6. PROVIDE RECEPTACLE ON ROOF FOR FUTURE RADON FAN. COORDINATE EXACT LOCATION PRIOR TO COMMENCING WORK. COORDINATE ROOF PENETRATIONS WITH ROOFING CONTRACTOR AND G.C.
7. ROUTE ROOF HYDRANT DRAIN TO NEAREST MECHANICAL CLOSET AND DRAIN TO FLOOR DRAIN.

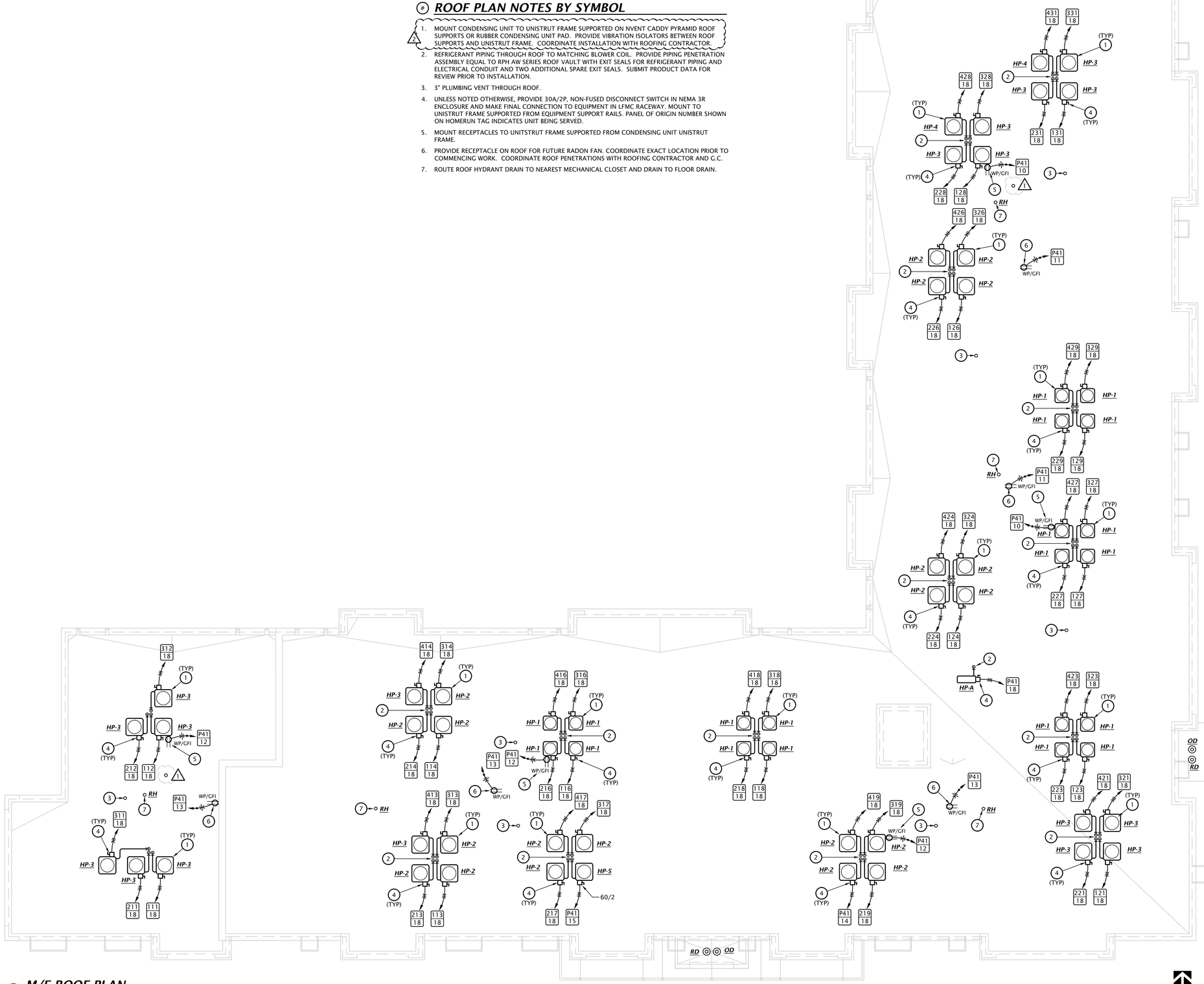

1 M/E ROOF PLAN
1/8" = 1'-0"

Reviewed for Code Compliance
Josh Hamlin
04/30/2025

LST Consulting Engineers, PA
MANHATTAN
4809 Vue Du Lac Place, Suite 201
Manhattan, KS 66503
785.587.8042
WICHITA
125 S. Washington, Suite 150
Wichita, Kansas 67202
316.285.0696
www.LSTengineers.com
mail@LSTengineers.com

Project 22062 May 2023

JonesGillamRenz
730 N. Ninth 1881 Main Street, Suite 301
Salina, KS 67401 Kansas City, MO 64108
785.827.0386 jgr@jgrarchitects.com

THE RESERVES at MAGNOLIA
NEW APARTMENT COMPLEX
DENTON, TEXAS

5-17-2023
STATE OF TEXAS
TIMOTHY C. TREDWAY
95252
LICENSED PROFESSIONAL ENGINEER

REVISION:	
1	06-26-2023
2	ASI #1 07-22-2024

DATE:	06-26-2023
JOB:	21-3205
SHEET NO.:	

ME2.1

COPYRIGHTED ©

Dwelling Unit Meter Center 'MCA' Load Calculation

Area: 28,279 SF (Dwelling Units Only)
32 Dwelling Units

				Connected Load (VA)	Demand Load (VA)
Feeder & Service Loads per NEC 220.84 Part IV					
C1	General Loads (220.84 (C)(1))				
a	Lighting & Receptacles	3 VA/SF	28279 SF	84,837	
C2	Required Circuits (220.84 (C)(2))				
a	Laundry Circuit	1,500 VA/Circuit	32 Circuit	48,000	
b	Kitchen Circuits	1,500 VA/Circuit	64 Circuit	96,000	
C3	Nameplate Ratings of Equipment (220.84 (C)(3))				
a1	Microwave	1,000 VA/Circuit	32 ea	32,000	
a2	Dishwasher	840 VA/Circuit	32 ea	26,880	
a3	Disposal	1175 VA/Circuit	32 ea	37,600	
a4	Refrigerator	1200 VA/Circuit	32 ea	38,400	
b	Electric Range	8,000 VA/Circuit	32 ea	256,000	
c	Electric Clothes Dryer	5,000 VA/Circuit	32 ea	160,000	
C4	Nameplate Ratings of Motors (220.84 (C)(4))				
	Blower Fan #1	956 VA/Circuit	12 ea	11,472	
	Blower Fan #2	956 VA/Circuit	8 ea	7,648	
	Blower Fan #3	900 VA/Circuit	12 ea	10,800	
C5	Larger of Heating and A/C load (220.84 (C)(5))				
	Electric Heat (5 kW)	3,900 VA/Circuit	12 ea	46,800	
	Electric Heat (8 kW)	5,200 VA/Circuit	8 ea	41,600	
	Electric Heat (9.6 kW)	6,900 VA/Circuit	12 ea	82,800	
			Connected Load Total	980,837	
		Dwelling Unit Demand Load from Table 220.84 = 31%			**304,059**
			Meter Center NEC Demand Load (VA) Sub-Total		**304,059**
			Spare Capacity	**10%**	**30,406**
			Total Meter Center Demand Load (VA)		**334,465**
			Total Meter Center Demand Load (Amperes) @ 208Y/120V-3Ph, 4W		**929**

Provide 1000A Meter Center

APARTMENT FEEDER SCHEDULE

Apartment #	Feeder Size
111, 112, 113, 114, 128, 131, 211, 212, 213, 214, 226, 228, 231, 311, 312, 313, 314, 328, 331, 428, 431	COPPER (BASE BID): (3)#3, #6G IN 1-1/4" C OR MC-CABLE; ALUMINUM (ALTERNATE BID): (3)#1, #4G IN 1-1/4" C OR SER CABLE (2)
116, 124, 126, 129, 216, 217, 224, 229, 316, 326, 329, 413, 414, 426, 429	COPPER (BASE BID): (3)#2, #6G IN 1-1/4" C OR MC-CABLE; ALUMINUM (ALTERNATE BID): (3)#1/0, #4G IN 1-1/4" C OR SER CABLE (2)
118, 127, 218, 227, 317, 324, 416, 417, 424	COPPER (BASE BID): (3)#1, #4G IN 1-1/4" C OR MC-CABLE; ALUMINUM (ALTERNATE BID): (3)#2/0, #2G IN 1-1/2" C OR SER CABLE (2)
121, 123, 219, 221, 223, 318, 319, 323, 327, 418, 419, 423, 427	COPPER (BASE BID): (3)#1/0, #3G IN 1-1/2" C OR MC-CABLE; ALUMINUM (ALTERNATE BID): (3)#3/0, #1G IN 2" C OR SER CABLE (2)
321, 421	COPPER (BASE BID): (3)#2/0, #2G IN 1-1/2" C OR MC-CABLE; ALUMINUM (ALTERNATE BID): (3)#4/0, #1G IN 2" C OR SER CABLE (2)

NOTES:

1. Voltage drop has been accounted for in sizes indicated, further up-sizing of feeders is not necessary
2. Ensure panel lugs are adequately sized to handle up-sized feeders.

NOTES:

- Meter Center main circuit breakers shall be 65 kAIC fully rated. Feeder breakers may be series rated with main breaker for a 65 kAIC rating.
- All conductor sizes are based on copper, U.N.O.
- Entire installation shall comply with NEC.
- Coordinate all responsibilities and requirements with power utility company and pay associated fees. Contact Information:
  Denton Municipal Electric
  Daniel Howington
  Line Designer
  (940) 349-7168
  daniel.howington@cityofdenton.com
- Coordinate final location of meter assemblies with utility company. Provide shop drawings of proposed equipment whether as specified or substituted to utility company for approval.
- All meter center components shall be NEMA 3R.
- All dimensions based on Square D equipment. It is the contractor's responsibility to verify the dimensions of substitute equipment.
- For each meter, provide a permanent brass, copper or aluminum tag identifying the apartment served. Tags shall be securely fastened to the meter base and be stamped with 1/8" letters, minimum.

Dwelling Unit Meter Center 'MCB' Load Calculation

Area: 25,097 SF (Dwelling Units Only)
28 Dwelling Units

				Connected Load (VA)	Demand Load (VA)
Feeder & Service Loads per NEC 220.84 Part IV					
C1	General Loads (220.84 (C)(1))				
a	Lighting & Receptacles	3 VA/SF	25097 SF	75,291	
C2	Required Circuits (220.84 (C)(2))				
a	Laundry Circuit	1,500 VA/Circuit	28 Circuit	42,000	
b	Kitchen Circuits	1,500 VA/Circuit	56 Circuit	84,000	
C3	Nameplate Ratings of Equipment (220.84 (C)(3))				
a1	Microwave	1,000 VA/Circuit	28 ea	28,000	
a2	Dishwasher	840 VA/Circuit	28 ea	23,520	
a3	Disposal	1175 VA/Circuit	28 ea	32,900	
a4	Refrigerator	1200 VA/Circuit	28 ea	33,600	
b	Electric Range	8,000 VA/Circuit	28 ea	224,000	
c	Electric Clothes Dryer	5,000 VA/Circuit	28 ea	140,000	
C4	Nameplate Ratings of Motors (220.84 (C)(4))				
	Blower Fan #1	956 VA/Circuit	8 ea	7,648	
	Blower Fan #2	956 VA/Circuit	18 ea	17,208	
	Blower Fan #3	900 VA/Circuit	4 ea	3,600	
C5	Larger of Heating and A/C load (220.84 (C)(5))				
	Electric Heat (5 kW)	3,900 VA/Circuit	8 ea	31,200	
	Electric Heat (8 kW)	5,200 VA/Circuit	18 ea	93,600	
	Electric Heat (9.6 kW)	6,900 VA/Circuit	4 ea	27,600	
			Connected Load Total	864,167	
		Dwelling Unit Demand Load from Table 220.84 = 33%			**285,175**
			Meter Center NEC Demand Load (VA) Sub-Total		**285,175**
			Spare Capacity	**10%**	**28,518**
			Total Meter Center Demand Load (VA)		**313,693**
			Total Meter Center Demand Load (Amperes) @ 208Y/120V-3Ph, 4W		**871**

Provide 1000A Meter Center

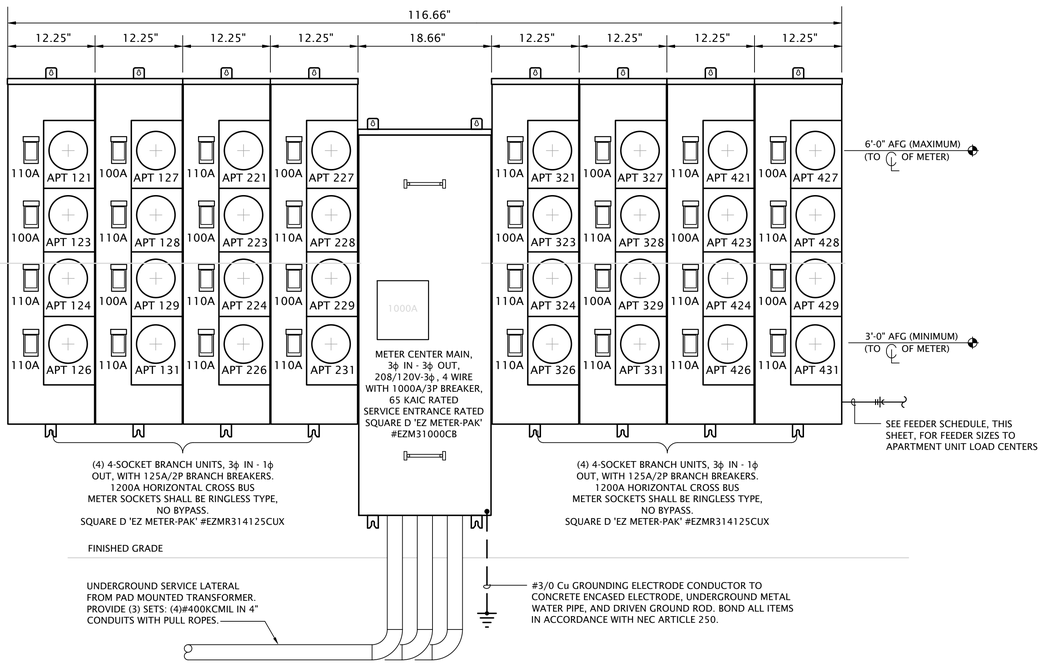

(2) ELECTRICAL RISER DIAGRAM 'MCA'

No Scale

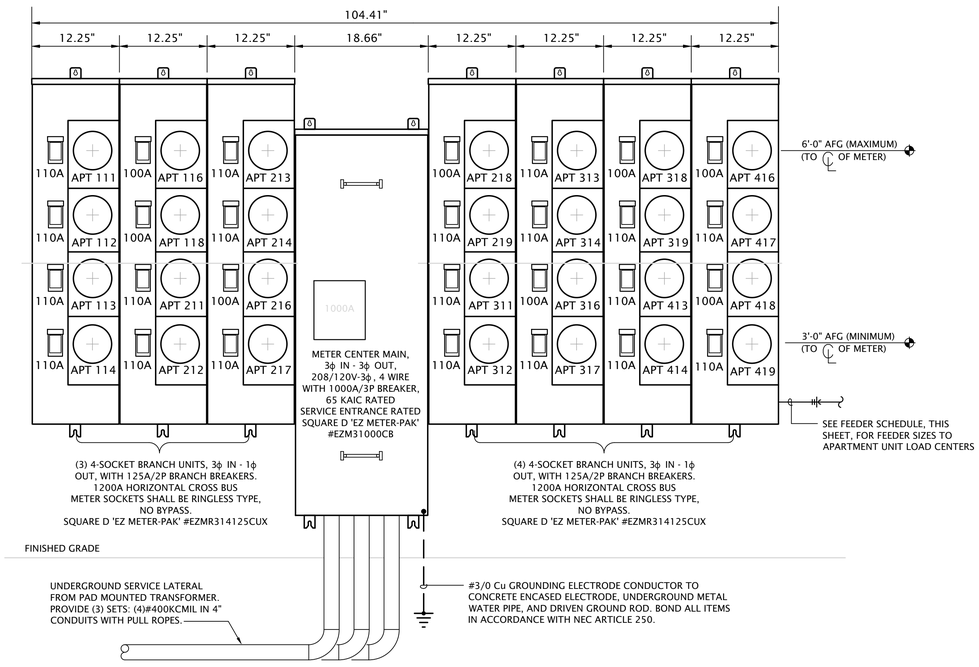

(1) ELECTRICAL RISER DIAGRAM 'MCB'

No Scale

Reviewed for Code Compliance
Josh Hamlin
04/30/2025

LST Consulting Engineers, PA
MANHATTAN
4809 Vue Du Lac Place, Suite 201
Manhattan, KS 66503
785.587.8042
WICHITA
125 S. Washington, Suite 150
Wichita, Kansas 67202
316.265.0696
www.LSTengineers.com
mail@LSTengineers.com

Project 22062 May 2023

JonesGillamRenz
730 N. Ninth 1881 Main Street, Suite 301
Salina, KS 67401 Kansas City, MO 64108
785.827.0386 jgr@jgrarchitects.com

THE RESERVES at MAGNOLIA

NEW APARTMENT COMPLEX

DENTON, TEXAS

5-17-2023

STATE OF KANSAS
TIMOTHY C. TREDWAY
95252
LICENSED PROFESSIONAL ENGINEER

REVISION:
2 ASI #1 07-22-2024

DATE: 06-26-2023
JOB: 21-3205
SHEET NO.:

E6.2

COPYRIGHTED ©

(#) DOMESTIC WATER PLAN NOTES BY SYMBOL

1. ROUTE 1-1/4" UP TO FLOOR ABOVE, SEE 1:P2.6 FOR CONTINUATION. ROUTE BRANCH TO FIRST FLOOR APARTMENT. SEE ENLARGED DOMESTIC WATER PLANS FOR SIZING AND ROUTING IN APARTMENT. PROVIDE SHUT-OFF VALVE AT BASE OF RISER.
2. ROUTE 1-1/2" UP TO FLOOR ABOVE, SEE 1:P2.6 FOR CONTINUATION. ROUTE BRANCH TO FIRST FLOOR APARTMENT. SEE ENLARGED DOMESTIC WATER PLANS FOR SIZING AND ROUTING IN APARTMENT. PROVIDE SHUT-OFF VALVE AT BASE OF RISER.
3. ROUTE 1-1/4" TO FIRST FLOOR APARTMENT. SEE ENLARGED DOMESTIC WATER PLANS FOR SIZING AND ROUTING IN APARTMENT.
4. ROUTE 1-1/2" UP TO FLOOR ABOVE, SEE 1:P2.6 FOR CONTINUATION.
5. ROUTE 1-1/4" UP TO FLOOR ABOVE, SEE 1:P2.7 FOR CONTINUATION. ROUTE BRANCH TO SECOND FLOOR APARTMENT. SEE ENLARGED DOMESTIC WATER PLANS FOR SIZING AND ROUTING IN APARTMENT.
6. ROUTE 1-1/4" UP TO FOURTH FLOOR APARTMENT ABOVE, SEE 1:P2.8 FOR CONTINUATION. ROUTE BRANCH TO THIRD FLOOR APARTMENT. SEE ENLARGED DOMESTIC WATER PLANS FOR SIZING AND ROUTING IN APARTMENTS.
7. ROUTE ALL APARTMENT WATER PIPING BELOW FLOOR.
8. PROVIDE PUBLIC LAVATORIES WITH POINT OF USE TEMPERING VALVE.
9. ROUTE HOT WATER DOWN IN WALL TO MINIMIZE DISTANCE TO LAVATORIES.
10. ROUTE 1" UP TO FOURTH FLOOR APARTMENT ABOVE, SEE 1:P2.8 FOR CONTINUATION. ROUTE BRANCH TO THIRD FLOOR APARTMENTS. SEE ENLARGED DOMESTIC WATER PLANS FOR SIZING AND ROUTING IN APARTMENTS.
11. 3/4" DOMESTIC COLD WATER LINE ROUTED IN ATTIC SPACE.
12. 3/4" DOMESTIC COLD WATER UP TO ROOF HYDRANT.
13. PROVIDE PIPING INSULATION PER SPECIFICATIONS WHERE PIPING CROSSES BREEZEWAYS.

		ALTERNATE MATERIAL/SIZE	
		Cross-linked polyethylene (PEX)	Polypropylene (PP)
COPPER PIPE SIZE INDICATED	1/2"	3/4"	1/2"
	3/4"	1"	1"
	1"		1-1/4"
	1-1/4"		1-1/2"
	1-1/2"		2"
	2"		2-1/2"
	2-1/2"		3"
	3"		3-1/2"

Note: Pipe sizes indicated on drawings are for Type L copper pipe. If alternate materials are used, sizes shall be as indicated above. Where no pipe size is shown, use of indicated material in design pipe size is prohibited. Do not use materials other than those listed.

PROJECT NUMBER: 22062
PROJECT NAME: The Reserves at Magnolia, Denton, TX
DATE: 26-Jun-23

FIXTURE TYPE	QUANTITY	TOTAL WATER FIXTURE UNITS
Bathroom Group (Private FT)	100	360
Dishwasher (Private)	61	85.4
Drinking Fountain	1	0.25
Ice Maker Connection Box	61	15.25
Kitchen Sink (Private)	61	85.4
Lavatory (Public)	2	4
Service Sink	4	12
Washing Machine(Private, 8lb.)	60	84
Water Closet (Public, FT)	2	10
	TOTAL F.U. =	657
2021 IPC		VELOCITY 3.3 PSI — TOTAL FT GPM= 152.9; MIN. PIPE SIZE = 3"

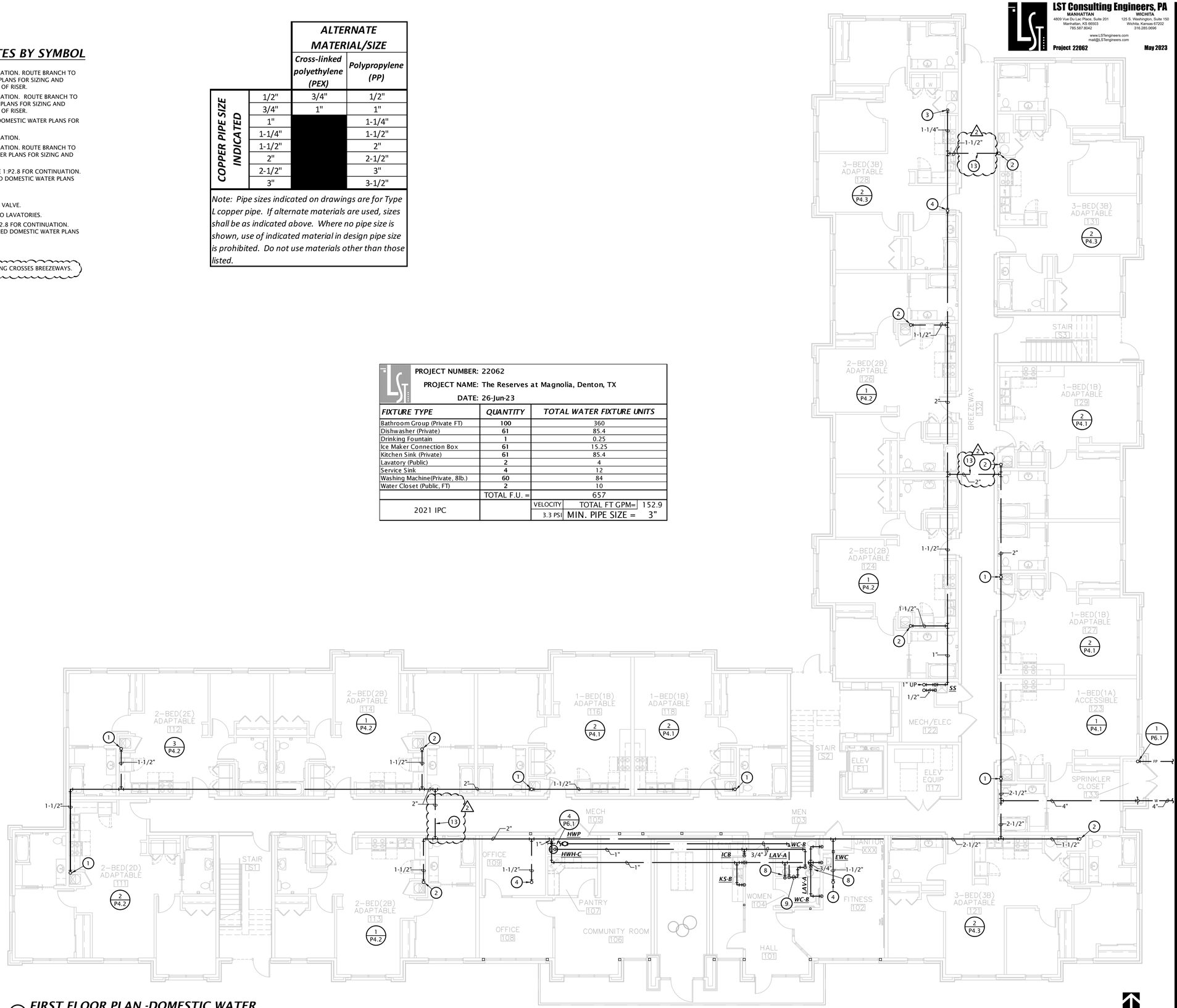

(1) FIRST FLOOR PLAN -DOMESTIC WATER
1/8" = 1'-0"

Reviewed for Code Compliance
Josh Hamlin
04/30/2025

LST Consulting Engineers, PA
MANHATTAN
4809 Vue Du Lac Place, Suite 201
Manhattan, KS 66503
785.587.8042
WICHITA
125 S. Washington, Suite 150
Wichita, Kansas 67202
316.285.0696
www.LSTengineers.com
mail@LSTengineers.com

Project 22062 May 2023

JonesGillamRenz
730 N. Ninth 1881 Main Street, Suite 301
Salina, KS 67401 Kansas City, MO 64108
785.827.0386 jgr@jgrarchitects.com

THE RESERVES at MAGNOLIA
NEW APARTMENT COMPLEX
DENTON, TEXAS

5-17-2023
TIMOTHY C. TREDWAY 95252 LICENSED PROFESSIONAL ENGINEER

REVISION:
2 ASI #1 07-22-2024

DATE: 06-26-2023
JOB: 21-3205
SHEET NO.:

P2.5

COPYRIGHTED ©

NOTES:
- PIPING SHALL NOT BE INSTALLED ABOVE ELECTRICAL PANELS.
- COORDINATE INSTALLATION OF PIPING IN MECHANICAL CLOSET W/ M.C. & E.C.
- SEE PLUMBING FIXTURE SCHEDULE ON SHEET P6.1 FOR FIXTURE ROUGH-IN INFORMATION.
- ROUTE PIPING BELOW FLOOR FOR 4TH FLOOR APARTMENTS AND WHERE NOTED ON OVERALL PLAN. DO NOT ROUTE PIPING ABOVE CEILING IN UNCONDITIONED ATTIC/ PLENUM SPACES EXPOSED TO EXTERIOR.
- INSULATE ALL HW PIPING WITH MINIMUM R-3 INSULATION PER 2021 IECC R403.5.2.

PROJECT SHALL COMPLY WITH ALL REQUIREMENTS OF THE 2021 IECC. REFERENCE SPECIFICATIONS FOR COMMISSIONING REQUIREMENTS.

(#) ENLARGED DOMESTIC WATER PLAN NOTES BY SYMBOL

1. SEE OVERALL DOMESTIC WATER PLANS FOR SIZING AND CONTINUATION.
2. PROVIDE 1-1/4" WATER SERVICE TO ALL TWO AND THREE BEDROOM APARTMENTS. PROVIDE INDIVIDUAL SHUT-OFF VALVE FOR EACH DWELLING UNIT.
3. PROVIDE 1" WATER SERVICE TO ONE BEDROOM APARTMENTS. PROVIDE INDIVIDUAL SHUT-OFF VALVE FOR EACH DWELLING UNIT.
4. CONNECT 1" CW AND HW TO WATER HEATER.
5. PROVIDE FIELD FABRICATED 1" HW AND CW MANIFOLD WITH 1/2" PEX BRANCHES AND ROUTE 1/2"PEX BRANCHES TO EACH FIXTURE. MOUNT MANIFOLDS IN ACCESSIBLE LOCATION FIELD COORDINATE EXACT LOCATION OF MANIFOLD WITH G.C. AND OTHER TRADES. PROVIDE ACCESS PANEL IF MOUNTED IN WALL. (2)
6. ROUTE 1/2" PEX BRANCHES TO MANIFOLD. PROVIDE COPPER STUB-OUTS AT ROUGH-IN FOR EACH FIXTURE.
7. PROVIDE 1/2" VALVED BRANCH BELOW SINK AND CONNECT DISHWASHER. ROUTE PIPING ALONG BACK OF CABINETRY, COORDINATE EXACT ROUTING WITH G.C. COORDINATE EXACT REQUIREMENTS WITH DISHWASHER PROVIDED.

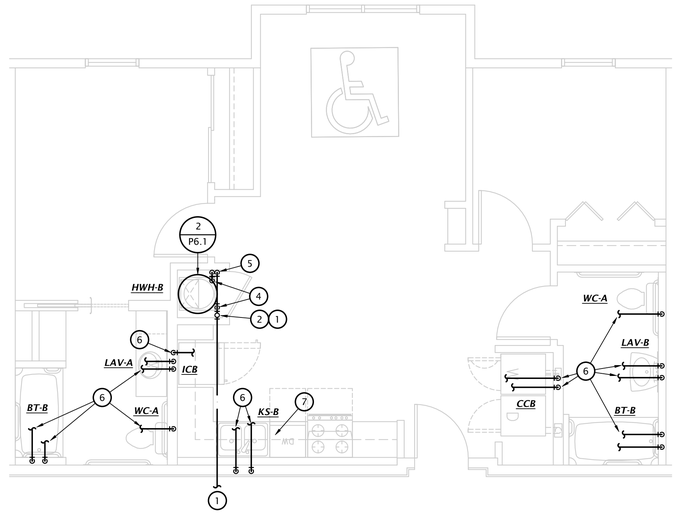

(3) 2 BEDROOM ACCESSIBLE DOMESTIC WATER PLAN (TYPE A)
1/4" = 1'-0"

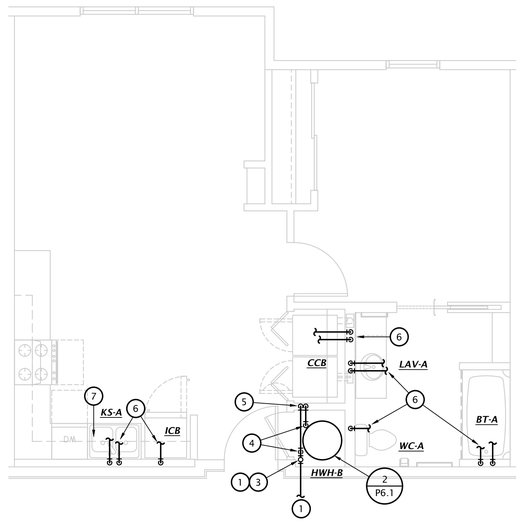

(2) 1 BEDROOM DOMESTIC WATER PLAN (TYPES B, AND C)
1/4" = 1'-0"

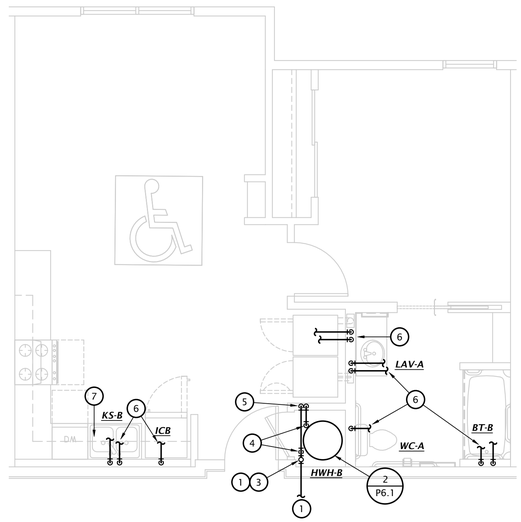

(1) 1 BEDROOM ACCESSIBLE DOMESTIC WATER PLAN (TYPE A)
1/4" = 1'-0"

Reviewed for Code Compliance
Josh Hamlin
04/30/2025

LST Consulting Engineers, PA
MANHATTAN
4809 Vue Du Lac Place, Suite 201
Manhattan, KS 66503
785.587.8042
WICHITA
125 S. Washington, Suite 150
Wichita, Kansas 67202
316.285.0696
www.LSTengineers.com
mail@LSTengineers.com

Project 22062 May 2023

JonesGillamRenz
730 N. Ninth 1881 Main Street, Suite 301
Salina, KS 67401 Kansas City, MO 64108
785.827.0386 jgr@jgrarchitects.com

THE RESERVES at MAGNOLIA
NEW APARTMENT COMPLEX
DENTON, TEXAS

5-17-2023
STATE OF KANSAS
TIMOTHY C. TREDWAY
05252
LICENSED PROFESSIONAL ENGINEER

REVISION:
(2) ASI #1 07-22-2024

DATE: 06-26-2023
JOB: 21-3205
SHEET NO.:

P4.1

COPYRIGHTED©

NOTES:
- PIPING SHALL NOT BE INSTALLED ABOVE ELECTRICAL PANELS.
- COORDINATE INSTALLATION OF PIPING IN MECHANICAL CLOSET W/ M.C. & E.C.
- SEE PLUMBING FIXTURE SCHEDULE ON SHEET P6.1 FOR FIXTURE ROUGH-IN INFORMATION.
- ROUTE PIPING BELOW FLOOR FOR 4TH FLOOR APARTMENTS AND WHERE NOTED ON OVERALL PLAN. DO NOT ROUTE PIPING ABOVE CEILING IN UNCONDITIONED ATTIC/ PLENUM SPACES EXPOSED TO EXTERIOR.
- INSULATE ALL HW PIPING WITH MINIMUM R-3 INSULATION PER 2021 IECC R403.5.2.

PROJECT SHALL COMPLY WITH ALL REQUIREMENTS OF THE 2021 IECC. REFERENCE SPECIFICATIONS FOR COMMISSIONING REQUIREMENTS.

(#) ENLARGED DOMESTIC WATER PLAN NOTES BY SYMBOL

1. SEE OVERALL DOMESTIC WATER PLANS FOR SIZING AND CONTINUATION.
2. PROVIDE 1-1/4" WATER SERVICE TO ALL TWO AND THREE BEDROOM APARTMENTS. PROVIDE INDIVIDUAL SHUT-OFF VALVE FOR EACH DWELLING UNIT.
3. PROVIDE 1" WATER SERVICE TO ONE BEDROOM APARTMENTS. PROVIDE INDIVIDUAL SHUT-OFF VALVE FOR EACH DWELLING UNIT.
4. CONNECT 1" CW AND HW TO WATER HEATER.
5. PROVIDE FIELD FABRICATED 1" HW AND CW MANIFOLD WITH 1/2" PEX BRANCHES AND ROUTE 1/2"PEX BRANCHES TO EACH FIXTURE. MOUNT MANIFOLDS IN ACCESSIBLE LOCATION FIELD COORDINATE EXACT LOCATION OF MANIFOLD WITH G.C. AND OTHER TRADES. PROVIDE ACCESS PANEL IF MOUNTED IN WALL. (2)
6. ROUTE 1/2" PEX BRANCHES TO MANIFOLD. PROVIDE COPPER STUB-OUTS AT ROUGH-IN FOR EACH FIXTURE.
7. PROVIDE 1/2" VALVED BRANCH BELOW SINK AND CONNECT DISHWASHER. ROUTE PIPING ALONG BACK OF CABINETRY, COORDINATE EXACT ROUTING WITH G.C. COORDINATE EXACT REQUIREMENTS WITH DISHWASHER PROVIDED.

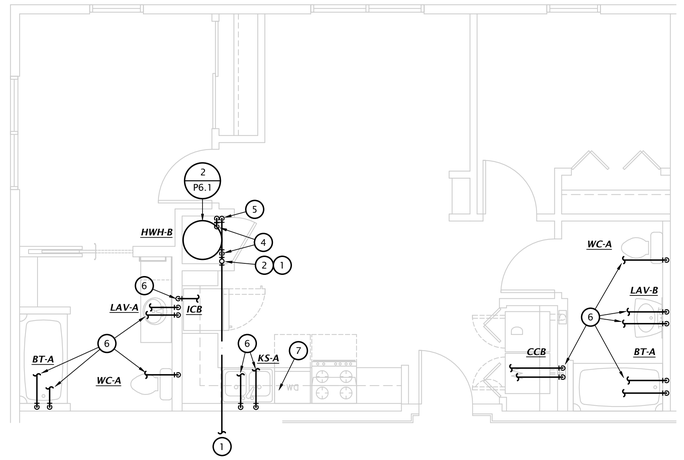

3 2 BEDROOM DOMESTIC WATER PLAN (TYPE E)
1/4" = 1'-0"

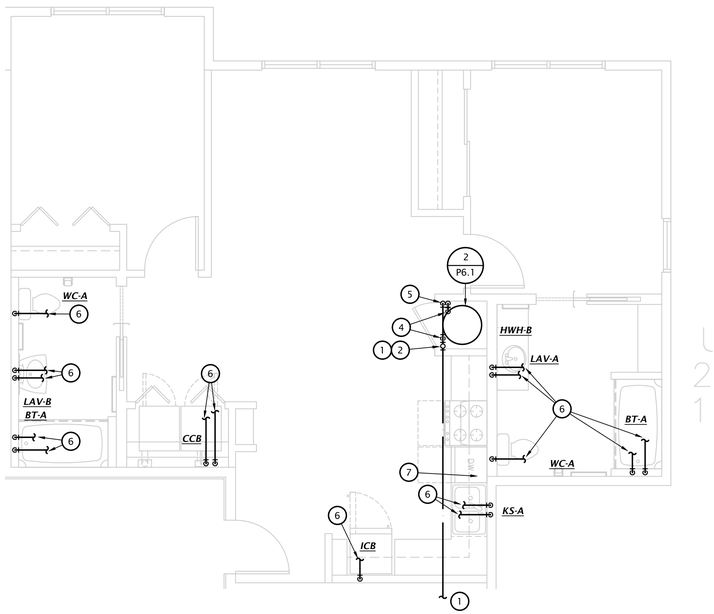

2 2 BEDROOM DOMESTIC WATER PLAN (TYPE D)
1/4" = 1'-0"

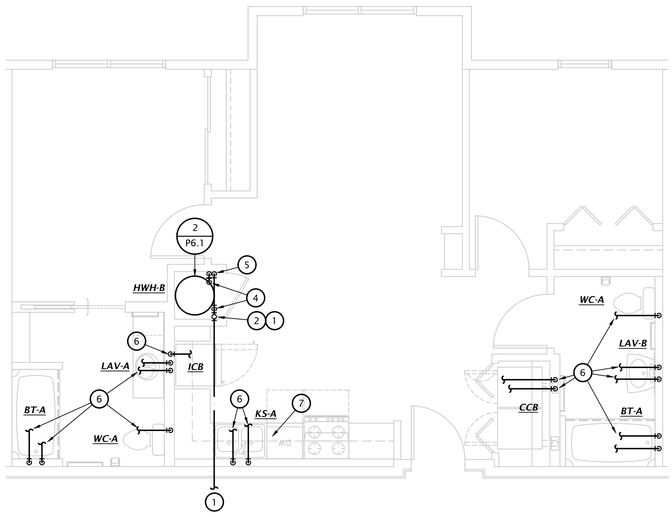

1 2 BEDROOM DOMESTIC WATER PLAN (TYPES B, AND C)
1/4" = 1'-0"

Reviewed for Code Compliance
Josh Hamlin
04/30/2025

LST Consulting Engineers, PA
MANHATTAN
4809 Vue Du Lac Place, Suite 201
Manhattan, KS 66503
785.587.8042
WICHITA
125 S. Washington, Suite 150
Wichita, Kansas 67202
316.285.0696
www.LSTengineers.com
mail@LSTengineers.com

Project 22062 May 2023

JonesGillamRenz
730 N. Ninth 1881 Main Street, Suite 301
Salina, KS 67401 Kansas City, MO 64108
785.827.0386 jgr@jgrarchitects.com

THE RESERVES at MAGNOLIA
NEW APARTMENT COMPLEX
DENTON, TEXAS

5-17-2023



REVISION:
2 ASI #1 07-22-2024

DATE: 06-26-2023
JOB: 21-3205
SHEET NO.:

P4.2

COPYRIGHTED ©

NOTES:
- PIPING SHALL NOT BE INSTALLED ABOVE ELECTRICAL PANELS.
- COORDINATE INSTALLATION OF PIPING IN MECHANICAL CLOSET W/ M.C. & E.C.
- SEE PLUMBING FIXTURE SCHEDULE ON SHEET P6.1 FOR FIXTURE ROUGH-IN INFORMATION.
- ROUTE PIPING BELOW FLOOR FOR 4TH FLOOR APARTMENTS AND WHERE NOTED ON OVERALL PLAN. DO NOT ROUTE PIPING ABOVE CEILING IN UNCONDITIONED ATTIC/ PLENUM SPACES EXPOSED TO EXTERIOR.
- INSULATE ALL HW PIPING WITH MINIMUM R-3 INSULATION PER 2021 IECC R403.5.2.

PROJECT SHALL COMPLY WITH ALL REQUIREMENTS OF THE 2021 IECC. REFERENCE SPECIFICATIONS FOR COMMISSIONING REQUIREMENTS.

(#) ENLARGED DOMESTIC WATER PLAN NOTES BY SYMBOL

1. SEE OVERALL DOMESTIC WATER PLANS FOR SIZING AND CONTINUATION.
2. PROVIDE 1-1/4" WATER SERVICE TO ALL TWO AND THREE BEDROOM APARTMENTS. PROVIDE INDIVIDUAL SHUT-OFF VALVE FOR EACH DWELLING UNIT.
3. PROVIDE 1" WATER SERVICE TO ONE BEDROOM APARTMENTS. PROVIDE INDIVIDUAL SHUT-OFF VALVE FOR EACH DWELLING UNIT.
4. CONNECT 1" CW AND HW TO WATER HEATER.
5. PROVIDE FIELD FABRICATED 1" HW AND CW MANIFOLD WITH 1/2" PEX BRANCHES AND ROUTE 1/2"PEX BRANCHES TO EACH FIXTURE. MOUNT MANIFOLDS IN ACCESSIBLE LOCATION FIELD COORDINATE EXACT LOCATION OF MANIFOLD WITH G.C. AND OTHER TRADES. PROVIDE ACCESS PANEL IF MOUNTED IN WALL.
6. ROUTE 1/2" PEX BRANCHES TO MANIFOLD. PROVIDE COPPER STUB-OUTS AT ROUGH-IN FOR EACH FIXTURE.
7. PROVIDE 1/2" VALVED BRANCH BELOW SINK AND CONNECT DISHWASHER. ROUTE PIPING ALONG BACK OF CABINETRY, COORDINATE EXACT ROUTING WITH G.C. COORDINATE EXACT REQUIREMENTS WITH DISHWASHER PROVIDED.

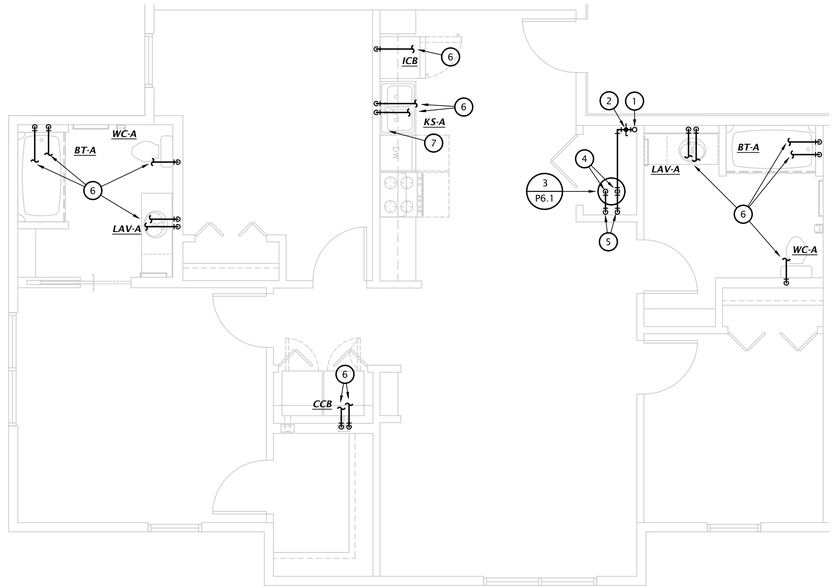

(3) 3 BEDROOM DOMESTIC WATER PLAN (TYPE D)
1/4" = 1'-0"

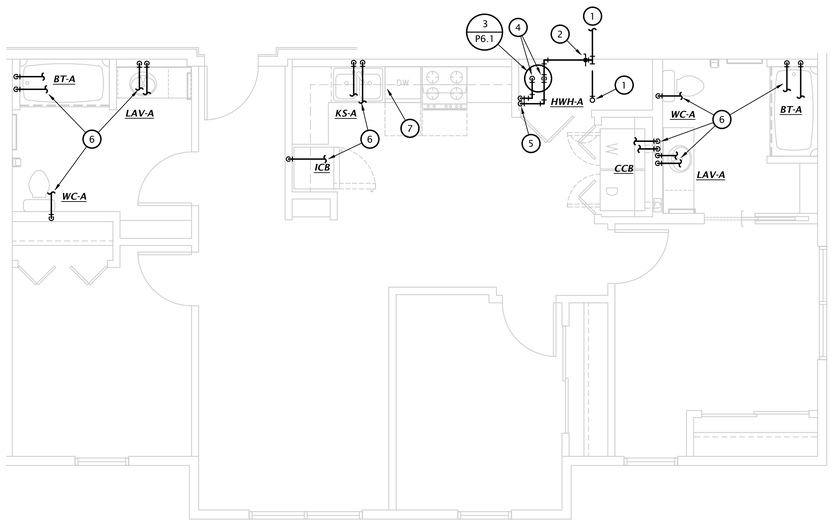

(2) 3 BEDROOM DOMESTIC WATER PLAN (TYPE B, AND E)
1/4" = 1'-0"

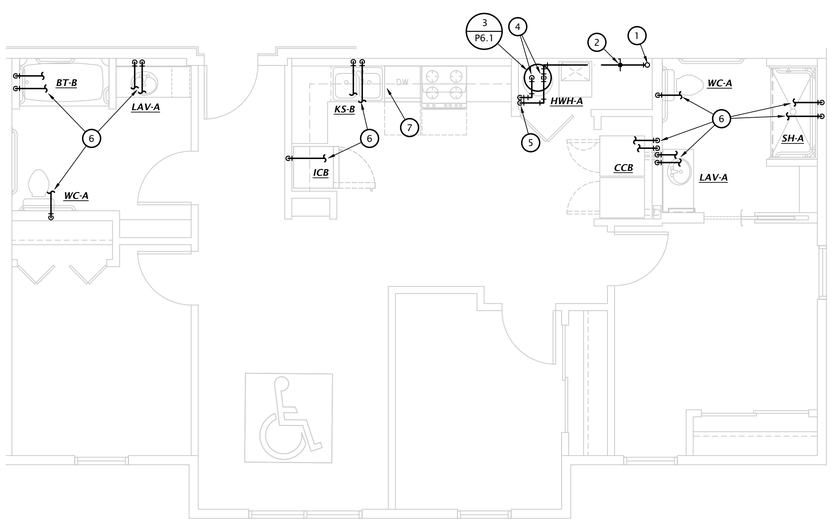

(1) 3 BEDROOM ACCESSIBLE DOMESTIC WATER PLAN (TYPE A)
1/4" = 1'-0"

Reviewed for Code Compliance
Josh Hamlin
04/30/2025

LST Consulting Engineers, PA
MANHATTAN
4809 Vue Du Lac Place, Suite 201
Manhattan, KS 66503
785.587.8042
WICHITA
125 S. Washington, Suite 150
Wichita, Kansas 67202
316.285.0696
www.LSTengineers.com
mail@LSTengineers.com

Project 22062 **May 2023**

JonesGillamRenz
730 N. Ninth 1881 Main Street, Suite 301
Salina, KS 67401 Kansas City, MO 64108
785.827.0386 jgr@jgrarchitects.com

THE RESERVES at MAGNOLIA
NEW APARTMENT COMPLEX
DENTON, TEXAS

5-17-2023

STATE OF TEXAS
TIMOTHY C. TREDWAY
95252
LICENSED PROFESSIONAL ENGINEER

REVISION:
2 ASI #1 07-22-2024

DATE: 06-26-2023
JOB: 21-3205
SHEET NO.:

P4.3

COPYRIGHTED ©

LST Consulting Engineers, PA
MANHATTAN
4809 Vue Du Lac Place, Suite 201
Manhattan, KS 66503
785.587.8042
WICHITA
125 S. Washington, Suite 150
Wichita, Kansas 67202
316.285.0696
www.LSTengineers.com
mail@LSTengineers.com

Project 22062 May 2023

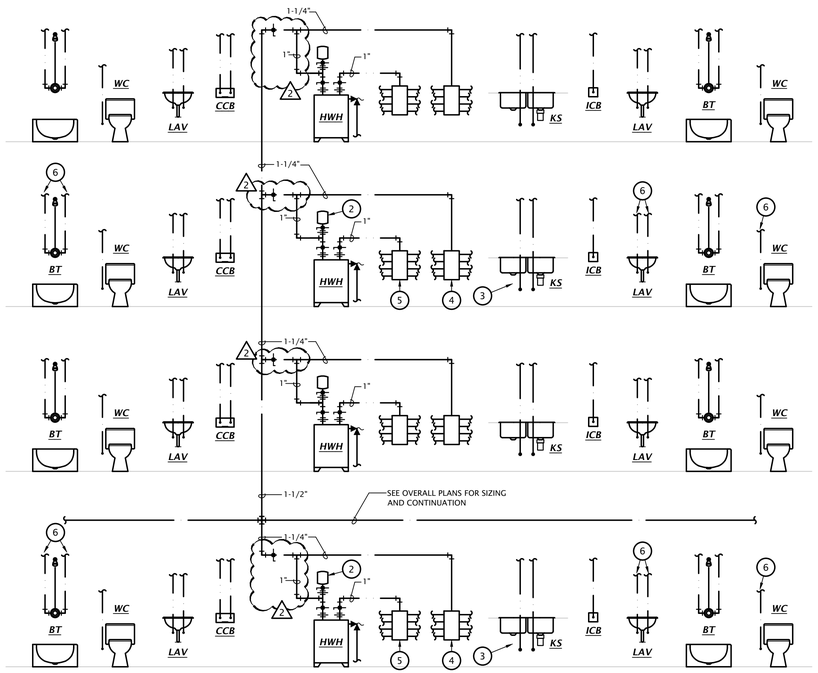

6 THREE BEDROOM TYPICAL DOMESTIC WATER RISER DIAGRAM

Not to Scale

REFERENCE P4 SHEETS FOR EXACT FIXTURE TYPES

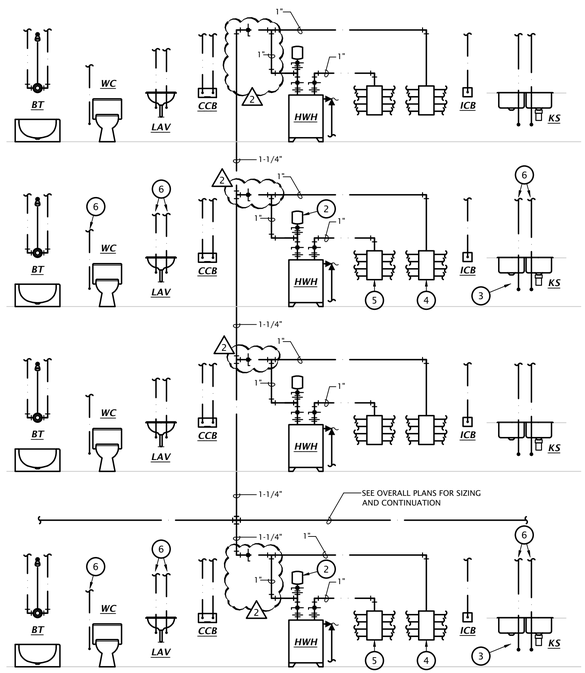

5 ONE BEDROOM TYPICAL DOMESTIC WATER RISER DIAGRAM

Not to Scale

REFERENCE P4 SHEETS FOR EXACT FIXTURE TYPES

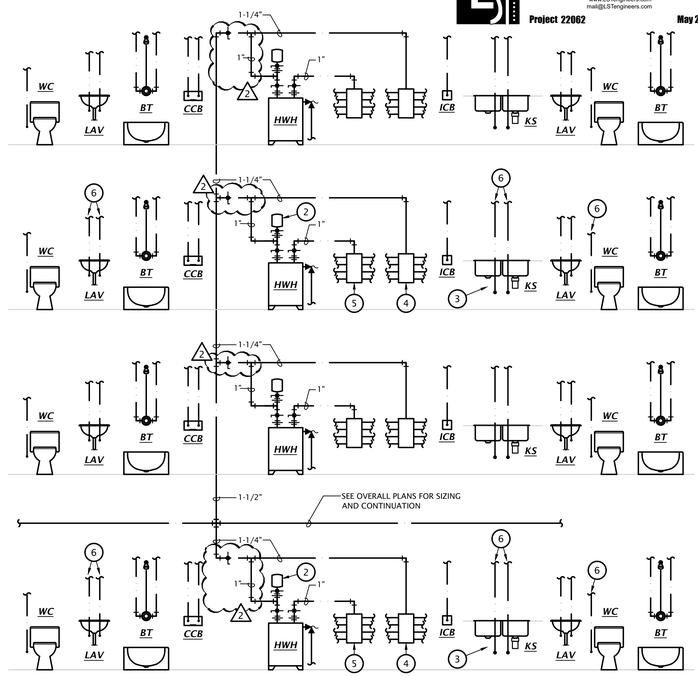

4 '2A, 2B, & 2C' TYPICAL DOMESTIC WATER RISER DIAGRAM

Not to Scale

REFERENCE P4 SHEETS FOR EXACT FIXTURE TYPES

WATER RISER DIAGRAM NOTES

1. NOT USED.
2. PROVIDE WATTS MODEL PLT-5 EXPANSION TANK. (TYPICAL)
3. PROVIDE 1/2" VALVED HOT WATER CONNECTION TO DISHWASHER. (TYPICAL)
4. COLD WATER SUPPLY PEX MANIFOLD. (TYPICAL)
5. HOW WATER SUPPLY PEX MANIFOLD. (TYPICAL)
6. ROUTE HOT AND COLD WATER PEX AS REQUIRED FROM FIXTURE TO APPROPRIATE MANIFOLD. SEE P4 SHEETS FOR SIZING AND CONTINUATION. (TYPICAL)

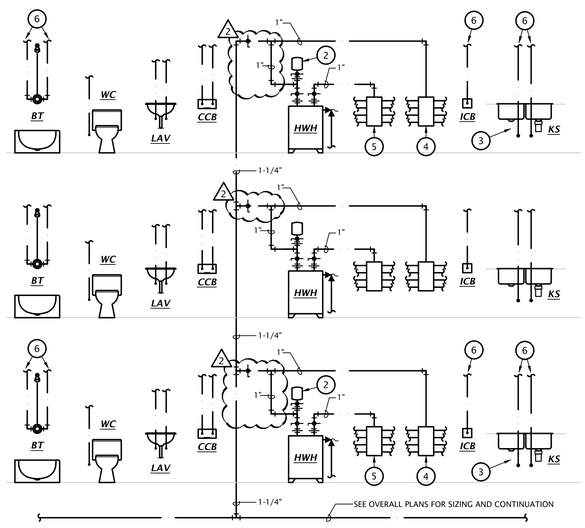

3 ALT. ONE BEDROOM DOMESTIC WATER RISER DIAGRAM

Not to Scale

REFERENCE P4 SHEETS FOR EXACT FIXTURE TYPES

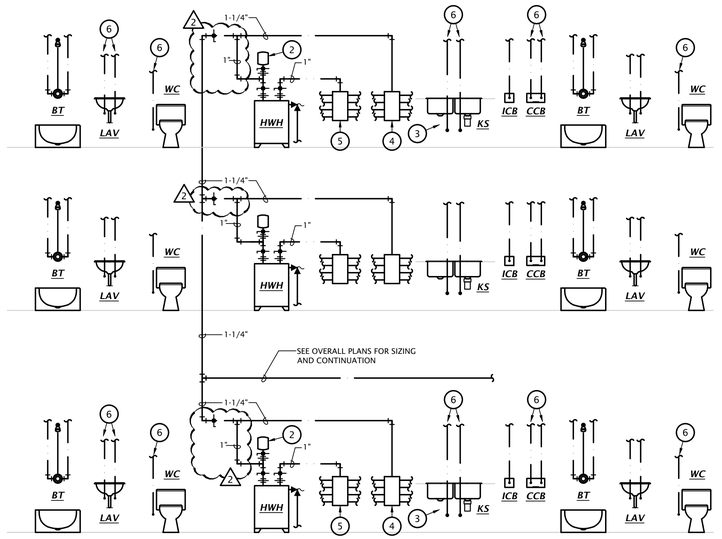

2 '2E' TYPICAL DOMESTIC WATER RISER DIAGRAM

Not to Scale

REFERENCE P4 SHEETS FOR EXACT FIXTURE TYPES

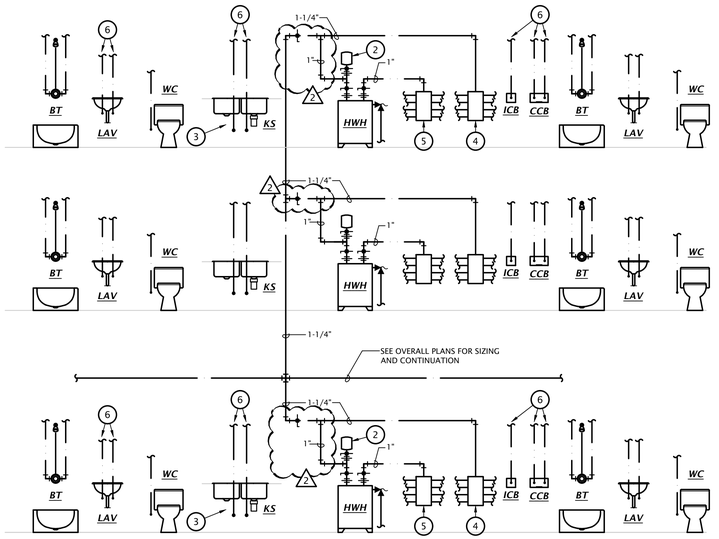

1 '2D' TYPICAL DOMESTIC WATER RISER DIAGRAM

Not to Scale

REFERENCE P4 SHEETS FOR EXACT FIXTURE TYPES

Reviewed for Code Compliance
Josh Hamlin
04/30/2025

JonesGillamRenz
730 N. Ninth 1881 Main Street, Suite 301
Salina, KS 67401 Kansas City, MO 64108
785.827.0386 jgr@jgrarchitects.com

THE RESERVES at MAGNOLIA

NEW APARTMENT COMPLEX

DENTON, TEXAS

5-17-2023

STATE OF KANSAS
TIMOTHY C. TREDWAY
95252
LICENSED PROFESSIONAL ENGINEER

REVISION:

2 ASI #1 07-22-2024

DATE: 06-26-2023
JOB: 21-3205
SHEET NO.:

P5.2

COPYRIGHTED©

LST Consulting Engineers, PA
MANHATTAN
4809 Vue Du Lac Place, Suite 201
Manhattan, KS 66503
785.587.8042
WICHITA
125 S. Washington, Suite 150
Wichita, Kansas 67202
316.285.0696
www.LSTengineers.com
mail@LSTengineers.com

Project 22062 **May 2023**

WATER RISER DIAGRAM NOTES

1. NOT USED.
2. PROVIDE WATTS MODEL PLT-5 EXPANSION TANK. (TYPICAL)
3. PROVIDE 1/2" VALVED HOT WATER CONNECTION TO DISHWASHER. (TYPICAL)
4. COLD WATER SUPPLY PEX MANIFOLD. (TYPICAL)
5. HOW WATER SUPPLY PEX MANIFOLD. (TYPICAL)
6. ROUTE HOT AND COLD WATER PEX AS REQUIRED FROM FIXTURE TO APPROPRIATE MANIFOLD. SEE P4 SHEETS FOR SIZING AND CONTINUATION. (TYPICAL)

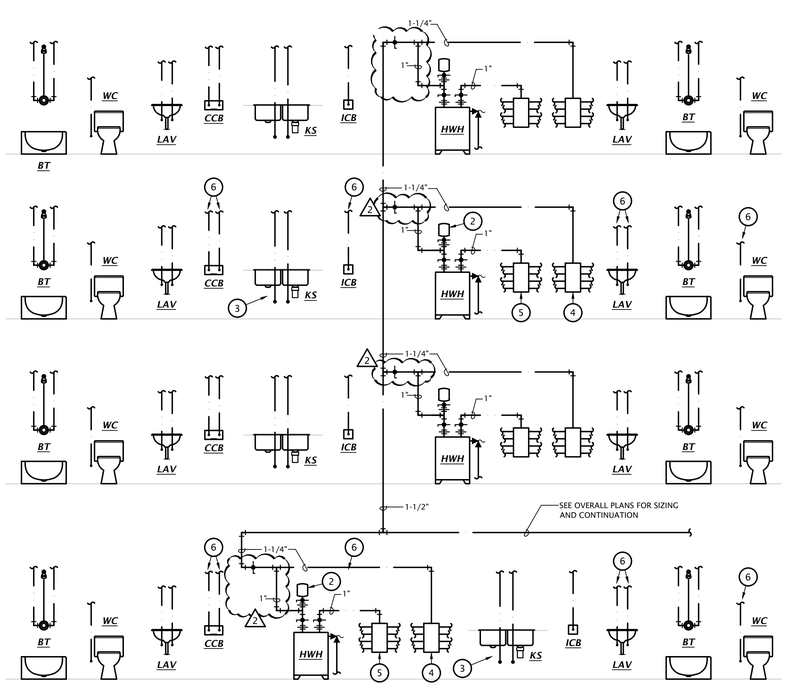

1 *ALT. THREE BEDROOM DOMESTIC WATER RISER DIAGRAM*

Not to Scale

REFERENCE P4 SHEETS FOR EXACT FIXTURE TYPES

Reviewed for Code Compliance
Josh Hamlin
04/30/2025

JonesGillamRenz
730 N. Ninth 1881 Main Street, Suite 301
Salina, KS 67401 Kansas City, MO 64108
785.827.0386 jgr@jgrarchitects.com

THE RESERVES at MAGNOLIA

NEW APARTMENT COMPLEX

DENTON, TEXAS

5-17-2023

STATE OF TEXAS
TIMOTHY C. TREDWAY
95252
LICENSED PROFESSIONAL ENGINEER

REVISION:
2 ASI #1 07-22-2024

DATE: 06-26-2023
JOB: 21-3205
SHEET NO.:

P5.3

COPYRIGHTED©

PLUMBING FIXTURE SCHEDULE

MARK	MANUFACTURER	DESCRIPTION	TRIM		ROUGH-IN SIZES				NOTES
			MANUFACTURER	DESCRIPTION	WASTE	VENT	CW	HW	
WC-A	KOHLER	Model #K-3658-(RA)-0 "Highline Classic" ADA compliant flush tank water closet, white vitreous china, two piece, 12" rough-in, elongated 16-1/2" high bowl, siphon jet flushing action, 1.28 GPF, polished chrome actuator. Coordinate location of trip lever with installation.	KOHLER	#K-4636-0 white, closed front plastic seat with slow closing lid.	4"	2"	1/2"	---	1
WC-B	KOHLER	Model #K-3658-(RA)-0 "Highline Classic" ADA compliant flush tank water closet, white vitreous china, two piece, 12" rough-in, elongated 16-1/2" high bowl, siphon jet flushing action, 1.28 GPF, polished chrome actuator. Coordinate location of trip lever with installation.	KOHLER	#K-4731-CA-0 white, open front, anti-microbial plastic seat without lid, with check hinge.	4"	2"	1/2"	---	1
LAV-A	KOHLER	Model 2196-4-0 self-rimming lavatory, white vitreous china, 20"W x 17", faucet holes on 4" centers.	KOHLER	#K-394-4-2 two handle faucet with pop-up drain and nickel finish.	2"	1-1/2"	1/2"	1/2"	1,2,3
LAV-B	KOHLER	Model 2005-0 wall hung lavatory, white vitrous china, 18-1/4"W x 17-1/4", faucet holes on 4" centers.	KOHLER	#K-394-4-2 two handle faucet with pop-up drain and nickel finish.	2"	1-1/2"	1/2"	1/2"	1,2,3
KS-A	KOHLER	Model K-3369-3 two compartment 18 GA stainless steel top-mount sink, 14-1/2"x16-1/2"x8"D inside, fully undercoated, faucet holes as required.	KOHLER INSINKERATOR	#K-780 single handle pull down kitchen sink faucet with chrome finish, single hole installation. Provide basket strainer. Badger 5 ½ HP garbage disposal with dishwasher waste connection.	2"	1-1/2"	1/2"	1/2"	1,2,4
KS-B	JUST	Model DL-ADA-2233-A-GR two compartment 18 GA stainless steel sink, self rimming, 14"x16"x5"D inside, fully undercoated, faucet holes as required, and drain hole center rear.	KOHLER IN-SINK-ERATOR	#K-780 single handle pull down kitchen sink faucet with chrome finish, single hole installation. Provide basket strainer. Badger 5 ½ HP garbage disposal with dishwasher waste connection.	2"	1-1/2"	1/2"	1/2"	1,2,4,5
SH-A	AQUARIUS	Model G-6233-8F-.75 reinforced fiberglass ADA roll-in shower, 60"W x33"D x73-3/4"H, with integral soap/toiletry shelves and grab bars in accordance with ADA requirements, fold-up seat, right or left hand rough-in as required, white finish. Provide with collapsible dam.	KOHLER	#K-304 pressure balancing valve with integral temperature limits and stops, #K-TS10584-4 valve trim, #K-355 wall supply elbow, #K-9514 60" hose, #K-22163-G hand shower, and #K-8524/K-349 slide bar. Entire assembly shall have nickel finish. Max. 2 GPM.	2"	1-1/2"	1/2"	1/2"	1
BT-A	AQUARIUS	Model A 6000 TS OT 2P cast acrylic ADA tub/shower, 60"W x33-3/4"D x78"H, with integral soap/toiletry shelves in accordance with ADA requirements right or left hand rough-in as required, white finish. Provide with blocking for grab bars and seat to be added at tenant's request.	KOHLER	#K-304 pressure balancing valve with integral temperature limits and stops, #K-TS10582-4 valve trim, #K-355 wall supply elbow, #K-9514 60" hose, #K-22163-G hand shower, and #K-8524/K-349 slide bar. Entire assembly shall have nickel finish. Max. 2 GPM.	2"	1-1/2"	1/2"	1/2"	2,4
BT-B	AQUARIUS	Model A 6000 TS OT 2P cast acrylic ADA tub/shower, 60"W x33-3/4"D x78"H, with integral soap/toiletry shelves and grab bars in accordance with ADA requirements, seat at end of tub, right or left hand rough-in as required, white finish.	KOHLER	#K-304 pressure balancing valve with integral temperature limits and stops, #K-TS10582-4 valve trim, #K-355 wall supply elbow, #K-9514 60" hose, #K-22163-G hand shower, and #K-8524/K-349 slide bar. Entire assembly shall have nickel finish. Max. 2 GPM.	2"	1-1/2"	1/2"	1/2"	1,2,4
SS	FIAT	Model MSB-2424 one piece molded stone mop basin, 24" square, stainless steel integral drain body with caulk connection, stainless steel wall guards.	DELTA	Model 28T9 faucet with hose thread outlet, vacuum breaker, pail hook, wall brace, metal lever handles.	3"	1-1/2"	3/4"	3/4"	4
WH	WOODFORD	Model 25 frost proof wall hydrant with anti-siphon vacuum breaker, metal handle.			---	---	3/4"	---	
RH	WOODFORD	Model RHY2-MS freezeless roof hydrant with vacuum breaker, cast iron mounting system, and vent to allow draining. Provide with 1/8" tapping for drain.			---	---	3/4"	---	
CCB	WATER-TITE	SUPPLIED BY OTHERS			2"	2"	1/2"	1/2"	
ICB	OATEY	Model 3848X fire rated ice maker connection box with 1/4 turn ball valve.			---	---	1/2"	---	
FD	WADE	Model 1102STD5 floor drain with satin nickel bronze strainer. Provide trap protection device equal to ProSet Trapguard.			2"	1-1/2"	---	---	
FS	WADE	Model 9140 floor sink with 8" deep body, enameled interior, sediment bucket, nickel bronze trim and grate with openings as requried. Provide trap protection device equal to ProSet Trapguard.			3"	1-1/2"	---	---	
EWC	MURDOCK	Model A172108F-UG ADA compliant dual height, self contained water cooler with stainless steal basin, from push bar actuator, and lead-free cooling system capable of cooling 8.0 GPH, 120 volts.			2"	1-1/2"	1/2"	---	1
RD	WADE	Model 3000 cast iron side outlet body roof drain with flange, flashing ring with gravel stop, unde deck clamp and cast iron dome strainer.							
OD	WADE	Model 3000 cast iron side outlet body roof drain with flange, flashing ring with gravel stop, unde deck clamp and cast iron dome strainer.							
DN	ZURN	Model ZF199 black downspout nozzle with threaded outlet and flange to secure nozzle to wall.							
HWH-A	A.O. SMITH	Model ENT-40, 40 gallon electric water heater, (2) non simultaneous 4500 watts, 208 volts heating elements, 21 GPH recovery @ 90˚F temp rise. Minimum 0.92 UEF. Supplied with temperature & pressure relief valve and brass drain valve.							
HWH-B	A.O. SMITH	Model ENJ-40, 40 gallon electric water heater, (2) non simultaneous 4500 watts, 208 volts heating elements, 21 GPH recovery @ 90˚F temp rise. Minimum 0.93 UEF. Supplied with temperature & pressure relief valve and brass drain valve.							
HWH-C	A.O. SMITH	Model EJCS-20, 20 gallon electric water heater, 2500 watts, 208 volts heating element, 11 GPH recovery @ 90˚F temp rise. Supplied with temperature & pressure relief valve and brass drain valve.							6
HWP	BELL & GOSSETT	Model NBF-33 circulation pump, bronze body, 10 GPM @ 10' head, 120 VAC. Provide clamp-on aquastat for pump control.							7

GENERAL:

- Provide fixtures with all trim necessary for complete installation.
- All toilets, lavatory faucets, showerheads, and kitchen faucets shall have EPA's WaterSense label.

NOTES:

1. In areas open to the public, fixture and installation to meet requirements of Americans with Disabilities Act. In apartments, fixture and installation to meet requirements of the Fair Housing Act.
2. Provide Dearborn supplies with stops and escutcheon plate, 1-1/4" cast brass or PVC p-trap.
3. Insulate water and waste piping below lavatory. Utilize insulation kit equivalent to LavGuard by Truebro.
4. Trim shall be provided with polished chrome finish.
5. Insulate water and waste piping below sink. Utilize insulation kit equivalent to LavGuard by Truebro. Provide Plumberex model #3071WD-N waste disposal cover.
6. Provide wall hung platform for water heater equal to Holdrite #50-SWHP-W-C. Coordinate exact location and mounting height with architect.
7. Pump shall have controls to prevent startup within 5 minutes from the end of the previous heating cycle. Hot water recirculation system shall meet all requirements of 2015 IECC.

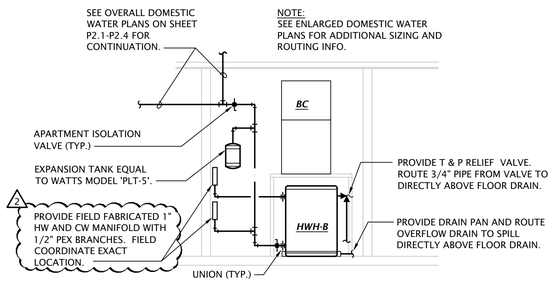

2 APARTMENT WATER HEATER PIPING DIAGRAM

NO SCALE

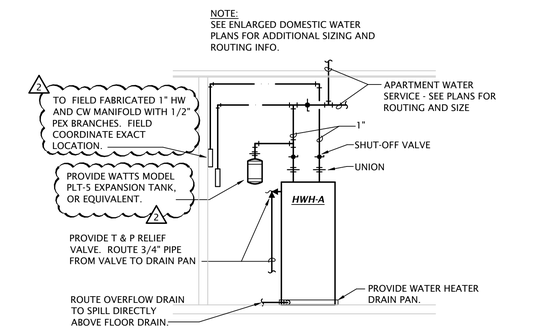

3 APARTMENT WATER HEATER PIPING DIAGRAM

NO SCALE

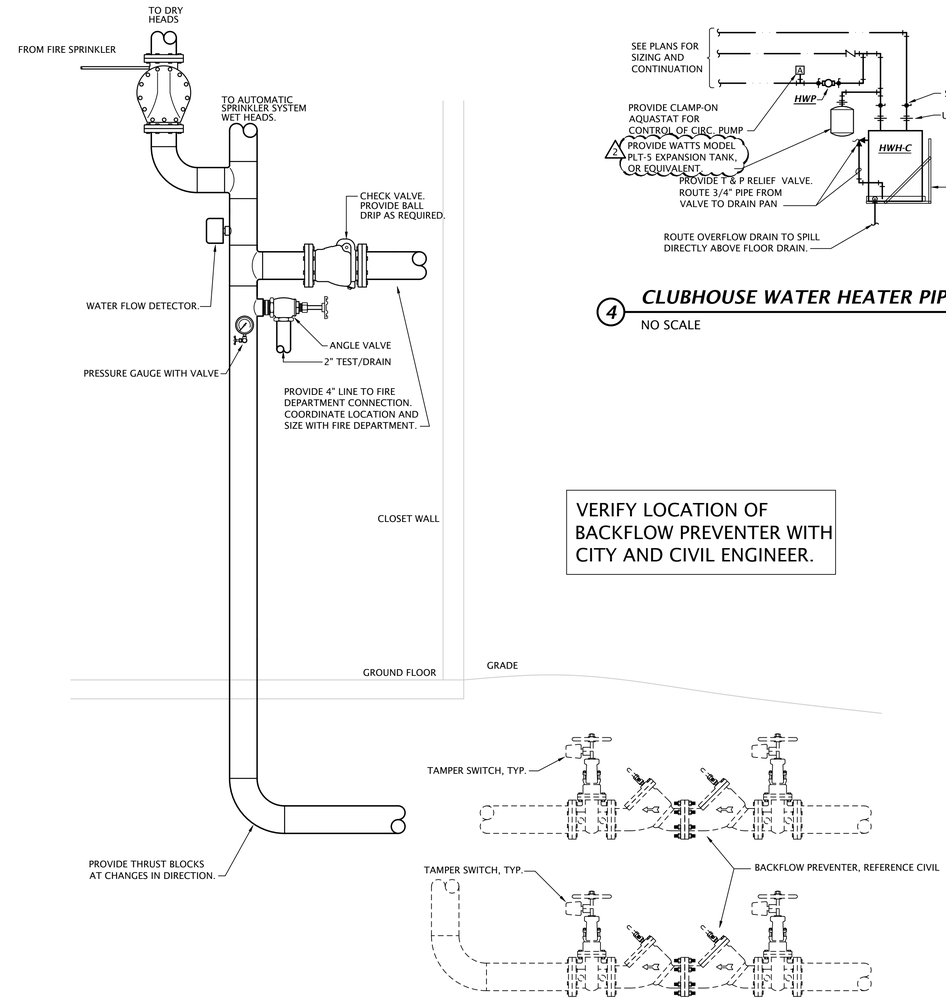

1 FIRE PROTECTION RISER DIAGRAM

NO SCALE

4 CLUBHOUSE WATER HEATER PIPING DIAGRAM

NO SCALE

Reviewed for Code Compliance
Josh Hamlin
04/30/2025

LST Consulting Engineers, PA
MANHATTAN
4809 Vue Du Lac Place, Suite 201
Manhattan, KS 66503
785.587.8042
WICHITA
125 S. Washington, Suite 150
Wichita, Kansas 67202
316.285.0696
www.LSTengineers.com
mail@LSTengineers.com

Project 22062 May 2023

JonesGillamRenz
730 N. Ninth 1881 Main Street, Suite 301
Salina, KS 67401 Kansas City, MO 64108
785.827.0386 jgr@jgrarchitects.com

THE RESERVES at MAGNOLIA
NEW APARTMENT COMPLEX
DENTON, TEXAS

5-17-2023



REVISION:
2 ASI #1 07-22-2024

DATE: 06-26-2023
JOB: 21-3205
SHEET NO.:

P6.1

COPYRIGHTED©