PAVING, STORM DRAIN, WATER AND SANITARY SEWER CONSTRUCTION PLANS for

THE RESERVES AT MAGNOLIA

1020 N. WILLOWWOOD STREET DENTON, TEXAS

OWNER

OPG MAGNOLIA PARTNER, LLC
254 N. SANTA FE AVE., SUITE A
SALINAS, KS 67401
TEL: 78-212-0810
email: aengstrom@overlandpg.com
CONTACT: APRIL ENGSTROM

DEVELOPER

OVERLAND PROPERTY GROUP
5341 W. 151st TERRACE
LEAWOOD, KS 66224
TEL: 785-212-0810
email: aengstrom@overlandpg.com
CONTACT: APRIL ENGSTROM

PREPARED BY:

m|m|a
civil engineering surveying landscape architecture planning
tbpels registration number: f - 2759
tbpels registration/license number: 10088000
519 east border
arlington, texas 76010
817-469-1671
fax: 817-274-8757
www.mmatexas.com

CONTACT: ROB CRONIN, P.E.

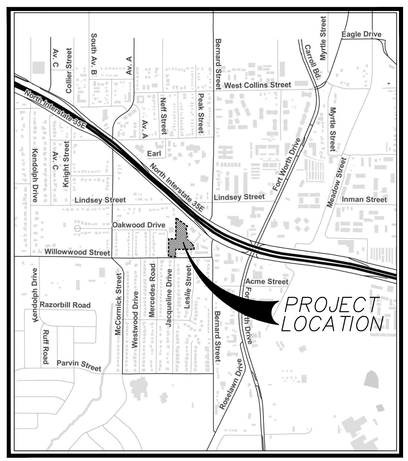

VICINITY MAP
NO SCALE

SOURCE BENCHMARK:

A: CITY OF DENTON MONUMENT #2011 - 3.5" ALUMINUM CAP ON ROD "2011" LOCATED AT JUNCTION OF FRAME ROAD NORTH OF CONCRETE CREEK RUNNING PARALLEL WITH MCKINNEY APPROXIMATELY 37.7' FROM POWER POLE TO THE WEST
ELEV: 611.24'
NAD83 TXNC (GRID)
N: 7128266.50'
E: 2389088.77'

BEARINGS & COORDINATES ARE GRID BASED ON THE "TEXAS COORDINATE SYSTEM OF 1983, NORTH CENTRAL ZONE" (2011), AS DETERMINED BY GPS OBSERVATIONS. THE CONVERGENCE ANGLE AT THIS POINT OF BEGINNING IS 0°44'22.0". ALL DISTANCES HAVE BEEN ADJUSTED TO SURFACE USING A COMBINED SCALE FACTOR OF 1.0001526521 (0.999847371200).

SITE BENCHMARK:

BM #1 - "X" CUT IN SQUARE LOCATED ON THE NORTHWEST CORNER OF AN INLET OFF THE EAST BOUND SIDE OF WILLOWWOOD STREET AND APPROXIMATELY 42' WEST FROM THE CENTERLINE OF JACQUELINE DRIVE

ELEV: 686.09'
NAD83 TXNC (GRID)
N: 7120793.43'
E: 2383257.97'

BM #2 - "X" CUT IN SQUARE LOCATED APPROXIMATELY 272' EAST FROM THE CENTERLINE OF MERCEDES ROAD AT THE END OF OAKWOOD DRIVE ON THE SOUTH SIDE ON THE CURB APPROXIMATELY 50' WEST OF THE CHURCH

ELEV: 688.85'
NAD83 TXNC (GRID)
N: 7121272.19'
E: 2383152.20'

SHEET INDEX

SHEET NO.	SHEET TITLE
C0.0	COVER SHEET
C0.1	FINAL PLAT
C1.0	GENERAL NOTES
C2.0	DEMOLITION PLAN
C3.0	SITE PLAN
C3.1	ACCESSIBLE ROUTE PLAN
C4.0	DIMENSION CONTROL PLAN
C5.0	PAVING PLAN
C6.0	OVERALL GRADING PLAN
C6.1	GRADING PLAN
C6.2	GRADING PLAN
C6.3	GRADING PLAN
C7.0	DME PLAN
C7.1	WATER PLAN
C7.2	SANITARY SEWER PLAN
C8.0	PRE-DEVELOPED DRAINAGE AREA MAP
C8.1	POST DEVELOPED DRAINAGE AREA MAP
C8.2	DETENTION CALCULATIONS
C8.3	HYDRAULIC CALCULATIONS
C8.4	STORM PLAN
C8.5	STORM PROFILES
C8.6	POND PLAN
C8.7	POND DETAILS
C9.0	EROSION CONTROL PLAN
C10.0	TRAFFIC CONTROL PLAN
C11.0	PRIVATE PAVING DETAILS
C11.1	PRIVATE PAVING DETAILS
C11.2	PRIVATE PAVING DETAILS
C11.3	PRIVATE PAVING DETAILS
C11.4	PRIVATE RAMP DETAILS
C11.5	PRIVATE WATER DETAILS
C11.6	PRIVATE SANITARY SEWER DETAILS
C11.7	PRIVATE STORM DRAIN DETAILS
C11.8	PRIVATE STORM DRAIN DETAILS
C11.9	PRIVATE EROSION CONTROL DETAILS
C12.0	PUBLIC WATER DETAILS
C12.1	PUBLIC WATER DETAILS
C12.2	PUBLIC WATER DETAILS
C12.3	PUBLIC WASTEWATER DETAILS
C12.4	PUBLIC WASTEWATER DETAILS
C12.5	PUBLIC WATER-WASTEWATER DETAILS
C12.6	PUBLIC WATER-WASTEWATER DETAILS
C12.7	PUBLIC STORM DRAINAGE DETAILS
C12.8	PUBLIC STORM DRAINAGE DETAILS
C12.9	PUBLIC PAVING DETAILS
C12.10	PUBLIC PAVING DETAILS
C12.11	PUBLIC DUMPSTER PAD DETAILS
C12.12	PUBLIC EROSION CONTROL DETAILS

THE DETAIL SHEETS SPECIFICALLY IDENTIFIED ABOVE HAVE BEEN SELECTED BY ME UNDER MY RESPONSIBLE SUPERVISION AS BEING APPLICABLE TO THIS PROJECT.

5/16/2023

STATE OF TEXAS
ROBERT J. CRONIN, JR.
122288
LICENSED
PROFESSIONAL ENGINEER

THE RESERVES AT MAGNOLIA

ISSUE DATE: MAY 2023

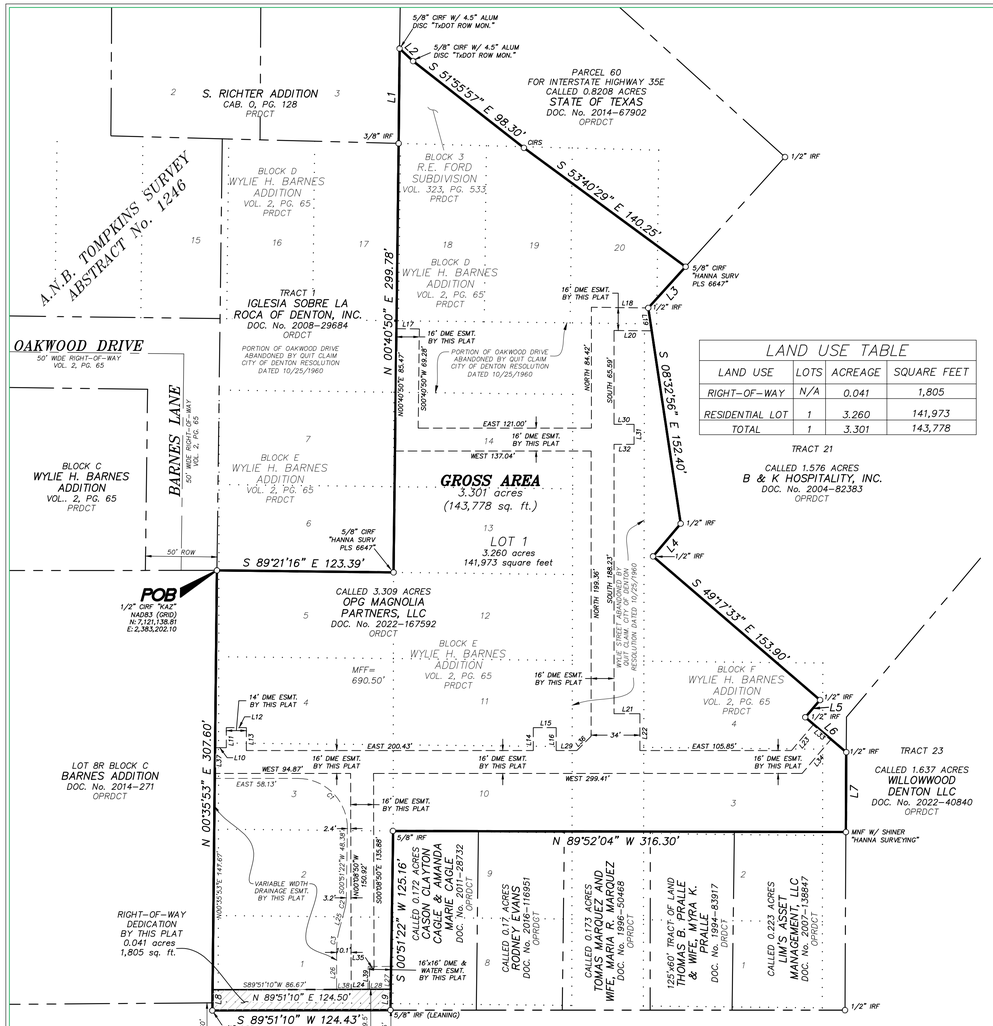

LAND USE TABLE			
LAND USE	LOTS	ACREAGE	SQUARE FEET
RIGHT-OF-WAY	N/A	0.041	1,805
RESIDENTIAL LOT	1	3.260	141,973
TOTAL	1	3.301	143,778

LINE TABLE		
LINE	BEARING	DISTANCE
L1	N 00°34'44" E	66.30'
L2	S 47°06'34" E	12.87'
L3	S 42°10'15" W	38.88'
L4	S 40°06'42" W	29.96'
L5	S 40°30'59" W	15.83'
L6	S 49°30'37" E	37.64'
L7	S 00°17'21" W	55.78'
L8	N 00°35'53" E	14.50'
L9	S 00°51'22" W	14.50'
L10	N 90°00'00" E	7.86'
L11	N 00°00'00" E	14.00'
L12	N 90°00'00" E	14.00'
L13	S 00°00'00" E	16.00'
L14	N 00°06'14" W	16.00'
L15	S 89°58'18" E	16.00'
L16	S 00°07'08" E	15.99'
L17	S 89°19'10" E	16.00'
L18	S 89°20'02" E	39.74'
L19	S 08°32'56" E	16.21'
L20	N 89°20'02" W	26.30'

LINE TABLE		
LINE	BEARING	DISTANCE
L21	N 89°59'12" E	18.09'
L22	S 00°00'00" E	25.77'
L23	N 40°11'14" E	24.00'
L24	N 89°51'10" E	12.65'
L25	S 15°00'00" W	14.88'
L26	S 00°00'00" E	27.94'
L27	S 00°47'36" W	16.00'
L28	S 89°51'10" W	16.00'
L29	S 90°00'00" E	14.43'
L30	N 90°00'00" E	14.00'
L31	S 00°00'00" E	14.00'
L32	N 90°00'00" W	14.00'
L33	S 49°30'37" E	16.00'
L34	S 40°11'14" W	31.34'
L35	S 89°51'10" W	3.08'
L36	N 45°00'00" E	14.14'
L37	N 00°35'53" E	18.00'
L38	N 89°51'10" E	10.17'
L39	S 00°51'22" W	15.00'

GENERAL NOTES

1. THIS PROPERTY MAY BE SUBJECT TO CHARGES RELATED TO IMPACT FEES AND THE APPLICANT SHOULD CONTACT THE CITY OF DENTON REGARDING ANY APPLICABLE FEES DUE.
2. BEARINGS AND COORDINATES ARE GRID BASED ON THE "TEXAS COORDINATE SYSTEM OF 1983, NORTH CENTRAL ZONE" (2011) AS DETERMINED BY GPS OBSERVATIONS. THE CONVERGENCE ANGLE AT THE POINT OF BEGINNING IS 0°44'22.0". ALL DISTANCES HAVE BEEN ADJUSTED TO SURFACE USING A COMBINED SCALE FACTOR IS 1.0001526521.
3. VISIBILITY TRIANGLES SHALL BE PROVIDED AT ALL PUBLIC OR PRIVATE STREET INTERSECTION IN ACCORDANCE WITH CURRENT ORDINANCE.THE AREA BETWEEN TWO AND ONE-HALF FEET AND EIGHT FEET IN HEIGHT, MEASURED FROM THE GRADE OF THE STREET ADJACENT TO THE VISIBILITY TRIANGLE. SHRUBS IN THIS AREA MUST BE KEPT TRIMMED SO AS TO BE SHORTER THAN TWO AND ONE-HALF FEET TALL AND TREES ARE TO BE KEPT TRIMMED SO AS NOT TO HAVE ANY SIDE BRANCHES BELOW EIGHT FEET.
4. NOTICE: SELLING A PORTION OF THIS ADDITION BY METES AND BOUNDS IS A VIOLATION OF CITY SUBDIVISION ORDINANCE AND STATE PLATTING STATUES AND IS SUBJECT TO FINES AND WITHHOLDINGS OF UTILITIES AND BUILDING CERTIFICATES.
5. THE PURPOSE OF THIS PLAT IS TO CREATE ONE (1) MULTIFAMILY LOT FROM UNDEVELOPED TRACTS.
6. MINIMUM FINISHED FLOOR ELEVATION SHALL BE 690.50'.
7. BY SCALED MAP LOCATION, THE SUBJECT PROPERTY IS LOCATED IN ZONE "X", AREAS DETERMINED TO BE OUTSIDE OF THE 0.2% ANNUAL CHANCE FLOODPLAIN, AND ZONE "X", AREAS OF 0.2% ANNUAL CHANCE FLOOD ACCORDING TO THE FLOOD INSURANCE RATE MAP NO. 48121C0360G, EFFECTIVE DATE APRIL 18, 2011.
8. ADEQUATE WATER AND WASTEWATER SERVICE WILL BE PROVIDED BY THE CITY OF DENTON.
9. THERE IS A TOTAL OF 1,054 INCHES dbh OF PROTECTED TREES PROPOSED TO BE PRESERVED ON THIS SITE. FUTURE LAND DISTURBING ACTIVITY, IF ANY, SHALL NOT IMPACT AND/OR DAMAGE TREES MARKED FOR PRESERVATION ON THE ACCOMPANYING PRESERVATION PLAN. NO PERMITS FOR CONSTRUCTION ACTIVITY SHALL BE ISSUED FOR THIS PROPERTY UNTIL REQUIRED TREE PROTECTION MEASURES PER SECTION 7.7.4.D OF THE DEVELOPMENT CODE OF THE CITY OF DENTON ARE IN PLACE.

OWNER'S CERTIFICATE

STATE OF TEXAS)(
COUNTY OF DENTON)(

WHEREAS **OPG MAGNOLIA PARTNERS, LLC**, ACTING BY AND THROUGH THE UNDERSIGNED, IT'S DULY AUTHORIZED AGENT, IS THE SOLE OWNER OF A 3.301 ACRE TRACT OF LAND.

BEING A 3.301 ACRE (143,778 SQUARE FOOT) TRACT OF LAND SITUATED IN THE A.N.B. TOMPKINS SURVEY, ABSTRACT NO. 1246, DENTON COUNTY TEXAS; BEING PART OF LOTS 17, 19 AND 20, ALL OF LOT 18, BLOCK D, ALL OF LOTS 1-5 AND 10-14, BLOCK E, AND ALL OF LOT 3 AND PART OF LOT 4, BLOCK F, WYLIE H. BARNES ADDITION, AN ADDITION TO THE CITY OF DENTON AS SHOWN ON THE PLAT RECORDED IN VOLUME 2, PAGE 65, PLAT RECORDS, DENTON COUNTY, TEXAS; PART OF A CALLED 3.62 ACRE TRACT, BLOCK 3, R.E. FORD SUBDIVISION OF THE A.N.B. TOMPKINS SURVEY AS SHOWN ON THE PLAT RECORDED IN VOLUME 323, PAGE 538, DEED RECORDS, DENTON COUNTY, TEXAS; BEING PART OF A CALLED 3.309 ACRE TRACT OF LAND DESCRIBED IN DEED TO OPG MAGNOLIA PARTNERS, LLC. AS RECORDED IN COUNTY CLERK'S FILE NO. 2022-167592, OFFICIAL RECORDS, DENTON COUNTY, TEXAS. SAID 3.301 ACRE TRACT BEING MORE PARTICULARLY DESCRIBED BY METES AND BOUNDS AS FOLLOWS:

BEARINGS AND COORDINATES ARE GRID BASED ON THE "TEXAS COORDINATE SYSTEM OF 1983, NORTH CENTRAL ZONE" AS DETERMINED BY GPS OBSERVATIONS. THE CONVERGENCE ANGLE AT THE POINT OF BEGINNING IS 00°44'22.0". ALL DISTANCES HAVE BEEN ADJUSTED TO SURFACE USING A COMBINED SCALE FACTOR OF 1.0001526521.

BEGINNING AT A 1/2" ORANGE PLASTIC CAPPED IRON ROD STAMPED "KAZ" FOUND (N: 7121138.81, E: 2383202.10) FOR THE COMMON WESTERNMOST NORTHWEST CORNER OF SAID 3.309 ACRE TRACT, THE SOUTHWEST CORNER OF A TRACT OF LAND CALLED TRACT 1 DESCRIBED IN DEED TO IGLESIA SOBRE LA ROCA OF DENTON, INC. AS RECORDED IN DOCUMENT NO. 2008-29684 OF SAID OFFICIAL RECORDS, THE NORTHEAST CORNER OF A TRACT OF LAND CALLED TRACT 2 IN SAID DEED TO IGLESIA SOBRE LA ROCA OF DENTON AND THE COMMON NORTHWEST CORNER OF LOT 5 OF SAID BLOCK E AND THE SOUTHWEST CORNER OF LOT 6 OF SAID BLOCK E AND BEING IN THE WEST RIGHT-OF-WAY LINE OF BARNES LANE (A 50 FOOT RIGHT-OF-WAY, VOLUME 2, PAGE 65 OF SAID PLAT RECORDS);

THENCE, SOUTH 89°21'16" EAST, WITH THE COMMON NORTH BOUNDARY LINE OF SAID 3.309 ACRE TRACT, THE SOUTH BOUNDARY LINE OF SAID TRACT 1, THE NORTH BOUNDARY LINE OF SAID LOT 5 AND THE SOUTH BOUNDARY LINE OF SAID LOT 6, A DISTANCE OF 123.39 FEET TO A 5/8" YELLOW PLASTIC CAPPED IRON ROD STAMPED "HANNA SURV PLS 6647" FOUND FOR A COMMON INTERIOR ELL CORNER OF SAID 3.309 ACRE TRACT, THE SOUTHEAST CORNER OF SAID TRACT 1 AND THE COMMON CORNER OF LOTS 5, 6, 12 AND 13 OF SAID BLOCK E;

THENCE, NORTH 00°40'50" EAST, WITH THE WEST BOUNDARY LINE OF SAID 3.309 ACRE TRACT, THE EAST BOUNDARY LINE OF SAID TRACT 1 AND THE COMMON WEST BOUNDARY LINE OF SAID LOT 13 AND THE EAST BOUNDARY LINE OF SAID LOT 6, PASSING A POINT FOR THE COMMON CORNER OF LOTS 6, 7, 13 AND 14 OF SAID BLOCK E, CONTINUING WITH THE COMMON WEST BOUNDARY LINE OF SAID 3.309 ACRE TRACT, THE EAST BOUNDARY LINE OF SAID TRACT 1 AND THE COMMON WEST BOUNDARY LINE OF SAID LOT 14 AND THE EAST BOUNDARY LINE OF SAID LOT 7, PASSING A POINT FOR THE COMMON NORTH CORNER OF SAID LOT 7 AND SAID LOT 14, CONTINUING OVER AND ACROSS SAID WYLIE H. BARNES ADDITION, IN ALL A DISTANCE OF 299.78 FEET TO A 3/8"IRON ROD FOUND IN THE COMMON NORTH LINE OF SAID WYLIE H. BARNES ADDITION, THE SOUTH LINE OF THE AFORESAID R.E. FORD SUBDIVISION AND BEING THE SOUTHEAST CORNER OF LOT 3, BLOCK A, S. RICHTER ADDITION, AN ADDITION TO THE CITY OF DENTON AS SHOWN ON THE PLAT RECORDED IN CABINET O, PAGE 128, PLAT RECORDS, DENTON COUNTY, TEXAS

THENCE, NORTH 00°34'44" EAST, OVER AND ACROSS SAID R.E. FORD SUBDIVISION AND THE AFORESAID CALLED 1.402 ACRE TRACT, WITH THE EAST BOUNDARY LINE OF SAID S. RICHTER ADDITION, A DISTANCE OF 66.30 FEET TO A TXDOT 5/8" ALUMINUM CAPPED IRON ROD FOUND FOR THE SOUTHWEST CORNER OF A CALLED 0.8208 ACRE TRACT OF LAND DESCRIBED IN DEED TO THE STATE OF TEXAS AS RECORDED IN DOCUMENT NO. 2014-67902 OF SAID OFFICIAL RECORDS;

THENCE, SOUTH 47°06'34" EAST, CONTINUING OVER AND ACROSS SAID R.E. FORD SUBDIVISION AND SAID 1.402 ACRE TRACT, WITH THE SOUTHWEST BOUNDARY LINE OF SAID 0.8208 ACRE TRACT, A DISTANCE OF 12.87 FEET TO A TXDOT 5/8" ALUMINUM CAPPED IRON ROD FOUND FOR AN ANGLE POINT;

THENCE, SOUTH 51°55'57" EAST, CONTINUING OVER AND ACROSS SAID R.E. FORD SUBDIVISION AND SAID 1.402 ACRE TRACT, WITH SAID SOUTHWEST BOUNDARY LINE, A DISTANCE OF 98.30 FEET TO A 5/8" YELLOW PLASTIC CAPPED IRON ROD STAMPED "MMA" SET FOR AN ANGLE POINT IN THE COMMON SOUTH LINE OF SAID 1.402 ACRE TRACT AND THE NORTH BOUNDARY LINE OF THE AFORESAID WYLIE H. BARNES ADDITION;

THENCE, SOUTH 53°40'29" EAST, CONTINUING A DISTANCE OF 140.25 FEET TO A 5/8" YELLOW PLASTIC CAPPED IRON ROD STAMPED "HANNA SURV PLS 6647" FOR THE SOUTH CORNER OF SAID 0.8208 ACRE TRACT AND BEING IN THE WEST BOUNDARY LINE OF A CALLED 1.576 ACRE TRACT OF LAND DESCRIBED IN DEED TO B & K HOSPITALITY, INC. AS RECORDED IN DOCUMENT NO. 2004-82383 OF SAID OFFICIAL RECORDS;

THENCE, ALONG SAID WEST BOUNDARY LINE OF SAID 1.576 ACRE TRACT OF LAND AND IN A SOUTHERLY DIRECTION, THE FOLLOWING SIX (6) COURSES AND DISTANCES:

SOUTH 42°10'15" WEST, A DISTANCE OF 38.88 FEET TO A 1/2"IRON ROD FOUND,
SOUTH 8°32'56" EAST, A DISTANCE OF 152.40 FEET TO A 1/2"IRON ROD FOUND,
SOUTH 40°06'42" WEST, A DISTANCE OF 29.96 FEET TO A 1/2"IRON ROD FOUND,
SOUTH 49°17'33" EAST, A DISTANCE OF 153.90 FEET TO A 1/2"IRON ROD FOUND,
SOUTH 40°30'59" WEST, A DISTANCE OF 15.83 FEET TO A 1/2"IRON ROD FOUND AND
SOUTH 49°30'37" EAST, A DISTANCE OF 37.64 FEET TO A 1/2"IRON ROD FOUND FOR THE SOUTH CORNER OF SAID 1.576 ACRE TRACT OF LAND, AND BEING IN THE WEST BOUNDARY LINE OF A CALLED 1.637 ACRES TRACT OF LAND DESCRIBED IN DEED TO WILLOWWOOD DENTON LLC, AS RECORDED IN DOCUMENT NO. 2022-40840 OF SAID OFFICIAL RECORDS;

THENCE SOUTH 0°17'21" WEST, A DISTANCE OF 55.78 FEET TO A MAG NAIL FOUND WITH SHINER STAMPED "HANNA SURVEYING" IN THE WEST BOUNDARY LINE OF SAID 1.637 ACRE TRACT OF LAND AND BEING AT THE NORTHEAST CORNER OF A CALLED 0.223 ACRE TRACT OF LAND DESCRIBED IN DEED TO LIM'S ASSET MANAGEMENT, LLC AS RECORDED IN DOCUMENT NO. 2007-138847, OF SAID OFFICIAL PUBLIC RECORDS;

THENCE NORTH 89°52'04" WEST, A DISTANCE OF 316.30 FEET TO A 5/8"IRON ROD FOUND AT THE NORTHWEST CORNER OF A CALLED 0.172 ACRE TRACT OF LAND DESCRIBED IN DEED TO CASON CLAYTON CAGLE ET AL. AS RECORDED IN DOCUMENT NO. 2011-116951 OF SAID OFFICIAL RECORDS;

THENCE SOUTH 0°51'22" WEST, WITH THE WEST BOUNDARY LINE OF SAID CALLED 0.172 ACRE TRACT, A DISTANCE OF 125.16 FEET TO A 5/8"IRON ROD FOUND AT THE SOUTHWEST CORNER OF SAID CALLED 0.172 ACRE TRACT OF LAND AND BEING IN THE NORTH LINE OF WILLOWWOOD STREET, A VARIABLE WIDTH PUBLIC RIGHT-OF-WAY;

THENCE SOUTH 89°51'10" WEST, ALONG SAID NORTH RIGHT-OF-WAY LINE, A DISTANCE OF 124.43 FEET TO A 1/2" ORANGE PLASTIC CAPPED IRON ROD STAMPED "KAZ"FOUND;

THENCE NORTH 0°35'53" EAST, A DISTANCE OF 307.60 FEET TO THE **POINT OF BEGINNING** AND CONTAINING 143,778 SQUARE FEET, OR 3.301 ACRES OF LAND, MORE OR LESS.

IMPORTANT NOTICE

THE CITY OF DENTON HAS ADOPTED THE NATIONAL ELECTRIC SAFETY CODE ("THE "CODE"). THE CODE GENERALLY PROHIBITS STRUCTURES WITHIN 17.5 FEET OF EITHER SIDE OF THE CENTER LINE OF OVERHEAD DISTRIBUTION LINES AND WITHIN 37.5 FEET ON EITHER SIDE OF THE CENTERLINE OF OVERHEAD TRANSMISSION LINES. IN SOME INSTANCES THE CODE REQUIRES GREATER CLEARANCES. BUILDING PERMITS WILL NOT BE ISSUED FOR STRUCTURES WITHIN THESE CLEARANCE AREAS. CONTACT THE BUILDING OFFICIAL WITH SPECIFIC QUESTIONS.

THIS PLAT IS HEREBY ADOPTED BY THE OWNER AND APPROVED BY THE CITY OF DENTON (CALLED "CITY") SUBJECT TO THE FOLLOWING CONDITIONS THAT SHALL BE BINDING UPON THE OWNERS, THEIR HEIRS, GRANTEES, AND SUCCESSORS. THE DRAINAGE AND DETENTION EASEMENT WITHIN THE LIMITS OF THE THIS ADDITION SHALL REMAIN OPEN AT ALL TIMES AND WILL BE MAINTAINED IN A SAFE AND SANITARY CONDITION BY THE OWNERS OF THE LOT OR LOTS THAT ARE TRAVERSED BY OR ADJACENT TO THE DRAINAGE AND DETENTION EASEMENT. THE CITY WILL NOT BE RESPONSIBLE FOR THE MAINTENANCE AND OPERATION OF SAID EASEMENT OR FOR ANY DAMAGE TO PRIVATE PROPERTY OR PERSON THAT RESULTS FROM CONDITIONS IN THE EASEMENT, OR FOR THE CONTROL OF EROSION. NO OBSTRUCTION TO THE NATURAL FLOW OF STORM WATER RUN-OFF SHALL BE PERMITTED BY CONSTRUCTION OF ANY TYPE OF BUILDING, FENCE OR ANY OTHER STRUCTURE WITHIN THE DRAINAGE AND DETENTION EASEMENT, AS HEREIN ABOVE DEFINED, UNLESS APPROVED BY THE CITY. THE OWNERS SHALL KEEP THE DRAINAGE AND DETENTION EASEMENT CLEAR AND FREE OF DEBRIS, SILT, AND ANY SUBSTANCE THAT WOULD RESULT IN UNSANITARY CONDITIONS OR OBSTRUCT THE FLOW OF WATER. THE CITY SHALL HAVE THE RIGHT OF INGRESS AND EGRESS FOR THE PURPOSE OF INSPECTION AND SUPERVISION OF MAINTENANCE BY THE OWNERS TO ALLEVIATE ANY UNDESIRABLE CONDITIONS THAT MAY OCCUR. FURTHERMORE, THE CITY SHALL HAVE THE RIGHT, BUT NOT THE OBLIGATION, TO ENTER UPON THE ABOVE-DESCRIBED DRAINAGE AND DETENTION EASEMENT TO REMOVE ANY OBSTRUCTION TO THE FLOW OF WATER, AFTER GIVING THE OWNERS WRITTEN NOTICE OF SUCH OBSTRUCTION AND OWNERS FAIL TO REMOVE SUCH OBSTRUCTION. SHOULD THE CITY OF DENTON BE COMPELLED TO REMOVE ANY OBSTRUCTION TO THE FLOW OF WATER, AFTER GIVING THE OWNERS WRITTEN NOTICE OF SUCH OBSTRUCTION AND OWNERS FAIL TO REMOVE SUCH OBSTRUCTION, THE CITY OF DENTON SHALL BE REIMBURSED BY THE OWNERS FOR REASONABLE COSTS FOR LABOR, MATERIALS, AND EQUIPMENT FOR EACH INSTANCE. THE NATURAL DRAINAGE THROUGH THE DRAINAGE AND DETENTION EASEMENT IS SUBJECT TO STORM WATER OVERFLOW AND NATURAL BANK EROSION TO AN EXTENT THAT CANNOT BE DEFINITELY DEFINED. THE CITY SHALL NOT BE HELD LIABLE FOR ANY DAMAGES OF ANY NATURE RESULTING FROM THE OCCURRENCE OF THESE NATURAL PHENOMENA OR RESULTING FROM THE FAILURE OF ANY STRUCTURE OR STRUCTURES, WITHIN THE EASEMENT OR OTHERWISE.

NOW THEREFORE, KNOW ALL MEN BY THESE PRESENTS:

OPG MAGNOLIA PARTNERS, LLC, DOES HEREBY DEDICATE TO THE USE OF PUBLIC FOREVER ALL STREETS, UNLESS SHOWN AS PRIVATE, AND ALL EASEMENTS SHOWN AND FOR ALL PURPOSES ACCOMMODATING DRAINAGE TO THE USE OF PUBLIC FOREVER. NO BUILDINGS OR OTHER IMPROVEMENTS SHALL BE CONSTRUCTED OR PLACED UPON, OVER OR ACROSS THE EASEMENTS AS SHOWN ON THIS PLAT. ANY PUBLIC UTILITY, INCLUDING THE CITY OF DENTON, SHALL HAVE THE RIGHT TO MOVE AND KEEP MOVED ALL OR PART OF ANY BUILDING, TREE SHRUB OTHER GROWTH OR IMPROVEMENTS WHICH IN ANY WAY ENDANGER OR INTERFERE WITH THE CONSTRUCTION, MAINTENANCE OR EFFICIENCY OF ITS RESPECTIVE SYSTEMS ON ANY OF THE EASEMENTS SHOWN ON THE PLAT; AND THEY SHALL HAVE THE RIGHT AT ALL TIMES TO INGRESS AND EGRESS UPON SAID EASEMENTS FOR THE PURPOSE OF CONSTRUCTION, RECONSTRUCTION, INSPECTION, MAINTAIN AND ADDING TO OR REMOVING ALL OR PART OF ITS RESPECTIVE SYSTEMS WITHOUT THE NECESSITY AT ANY TIME OF PROCURING THE PERMISSION OF ANYONE.

APPROVED THIS __ DAY OF _____2023, BY THE PLANNING AND ZONING COMMISSION OF THE CITY OF DENTON, TEXAS.

_____ _____
CHAIRMAN, PLANNING AND ZONING COMMISSION — DATE

_____ _____
CITY SECRETARY — DATE

CURVE TABLE					
CURVE	RADIUS	ARC LENGTH	DELTA ANGLE	CHORD BEARING	CHORD LENGTH
C1	34.50'	54.71'	90° 51' 22"	S 44°34'19" E	49.15'
C2	34.50'	8.52'	14° 08' 38"	S 07°55'41" W	8.50'
C3	51.50'	13.48'	15° 00' 00"	S 07°30'00" W	13.44'

OWNER'S DEDICATION

NOW, THEREFORE, KNOW ALL MEN BY THESE PRESENTS:

THAT, **OPG MAGNOLIA PARTNERS, LLC**, ACTING BY AND THROUGH THE UNDERSIGNED, DOES HEREBY ADOPT THIS PLAT DESIGNATING THE HEREIN ABOVE DESCRIBED REAL PROPERTY AS **LOT 1, BLOCK 1, THE RESERVES AT MAGNOLIA**, AN ADDITION TO THE CITY OF DENTON, DENTON COUNTY, TEXAS, AND DO HEREBY DEDICATE TO THE PUBLIC'S USE THE STREETS, ALLEYS, EASEMENTS, PARKS AND OTHER OPEN SPACES SHOWN THEREON, EXCEPT THE PRIVATE EASEMENTS SHOWN THEREON. THIS PLAT DOES NOT ALTER OR REMOVE EXISTING DEED RESTRICTION OR COVENANTS, IF ANY, ON THIS PROPERTY.

PURSUANT TO SECTION 12.002 OF THE TEXAS PROPERTY CODE, I HAVE OBTAINED ORIGINAL TAX CERTIFICATES FROM EACH TAXING UNIT WITH JURISDICTION OVER EACH PARCEL OF REAL PROPERTY IN SAID SUBDIVISION INDICATING THAT NO DELINQUENT AD VALOREM TAXES ARE OWED ON THE REAL PROPERTY WHICH IS THE SUBJECT OF THE PLAT OR REPLAT I HAVE SUBMITTED TO THE CITY OF DENTON, DENTON COUNTY, TEXAS FOR FILING AND RECORDING WITH THE DENTON COUNTY CLERK'S OFFICE.

WITNESS MY HAND THIS THE _____ DAY OF _____, 2023.

GRANTOR:

OPG MAGNOLIA PARTNERS, LLC.
A TEXAS LIMITED LIABILITY COMPANY

BY: _____
APRIL ENGSTROM

ITS: _____

STATE OF TEXAS §
COUNTY OF _____ §

THIS INSTRUMENT WAS ACKNOWLEDGED BEFORE ME ON THIS ___ DAY OF _____, 2023, BY APRIL ENGSTROM, _____, OPG MAGNOLIA PARTNERS, LLC A TEXAS LIMITED LIABILITY COMPANY.

_____
NOTARY PUBLIC, STATE OF _____

PRINTED NAME: _____

COMMISSION EXPIRES: _____

SURVEYOR'S CERTIFICATE

THAT I, LON E. WHITTEN, A REGISTERED PROFESSIONAL LAND SURVEYOR IN THE STATE OF TEXAS, DO HEREBY DECLARE THAT I PREPARED THIS PLAT FROM AN ACTUAL AND ACCURATE SURVEY OF THE LAND AND THAT THE CORNER MONUMENTS SHOWN HEREON AS SET WERE PROPERLY PLACED UNDER MY PERSONAL SUPERVISION IN ACCORDANCE WITH THE SUBDIVISION REGULATIONS OF THE CITY OF DENTON, TEXAS.

PRELIMINARY
This document shall not be recorded for any purpose and shall not be used or viewed or relied upon as a final survey document. Released for review by

_____
LON E. WHITTEN DATE: MAY 15, 2023
REGISTERED PROFESSIONAL LAND SURVEYOR
TEXAS REGISTRATION NO. 5893

STATE OF TEXAS)(
COUNTY OF TARRANT)(

BEFORE ME, THE UNDERSIGNED AUTHORITY ON THIS DAY PERSONALLY APPEARED LON E. WHITTEN, KNOWN TO ME TO BE THE PERSON WHOSE NAME IS SUBSCRIBED TO THE FOREGOING INSTRUMENT, AND ACKNOWLEDGED TO ME THAT HE EXECUTED THE SAME FOR THE PURPOSES AND CONSIDERATIONS THEREIN EXPRESSED IN THE CAPACITY THEREIN STATED.

GIVEN UNDER MY HAND AND SEAL OF OFFICE ON THIS _____ DAY OF_____, 2023.

_____
NOTARY PUBLIC IN AND FOR THE STATE OF TEXAS

MY COMMISSION EXPIRES: _____

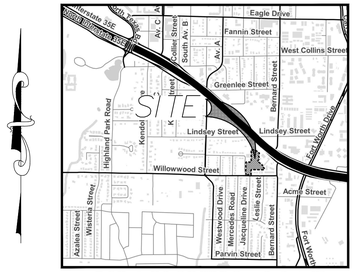

VICINITY MAP

NO SCALE

50 0 25 50 100

1 inch = 50 ft.

LEGEND/ABBREVIATIONS

CIRS	5/8" CAPPED IRON ROD SET STAMPED "MMA" (UNLESS OTHERWISE NOTED)
CIRF	CAPPED IRON ROD FOUND
FND.	FOUND
IRF	IRON ROD FOUND
IPF	IRON PIPE FOUND
DRDCT	DEED RECORDS DENTON COUNTY, TEXAS
PRDCT	PLAT RECORDS DENTON COUNTY, TEXAS
ORDCT	OFFICIAL RECORDS DENTON COUNTY, TEXAS
VOL.	VOLUME
PG.	PAGE
DOC No.	COUNTY CLERK'S DOCUMENT NUMBER
ESMT.	EASEMENT
UE	UTILITY EASEMENT
DE	DRAINAGE EASEMENT
DME	DENTON MUNICIPAL ELECTRIC
SSE	SANITARY SEWER EASEMENT
WE	WATER LINE EASEMENT
POB	POINT OF BEGINNING
MFF	MINIMUM FINISHED FLOOR ELEVATION
*	FEMA ELEVATION CERTIFICATE NOT REQUIRED
BL	BUILDING SETBACK LINE
CM	CONTROLLING MONUMENT
———	BOUNDARY LINE
— — —	ADJOINER OR RIGHT-OF-WAY LINE
· · · · ·	OLD LOT LINE
– – – – –	EASEMENT LINE

FINAL PLAT
LOT 1, BLOCK 1
THE RESERVES at MAGNOLIA

BEING A REPLAT OF
PART OF THE AMENDED PLAT OF THE WYLIE H. BARNES ADDITION, AN ADDITION TO THE CITY OF DENTON, DENTON COUNTY, TEXAS VOLUME 2, PAGE 65, PRDCT AND PART OF THE PLAT OF THE R.E. FORD SUBDIVISION, AN ADDITION TO THE CITY OF DENTON, DENTON COUNTY, TEXAS VOLUME 323, PAGE 533, PRDCT AND BEING 3.301 ACRES OF LAND SITUATED IN THE A.N.B. TOMPKINS SURVEY, ABSTRACT NO. 1246 CITY OF DENTON, DENTON COUNTY, TEXAS

CITY PROJECT NUMBER: PP23-0002

MAY 2023

OWNER:
OPG MAGNOLIA PARTNERS, LLC
254 N. SANTA FE AVE., SUITE A
SALINA, KS 67401
TEL: 785-212-0810
email: aengstrom@overlandpg.com
CONTACT: APRIL ENGSTROM

DEVELOPER:
OVERLAND PROPERTY GROUP
5341 W. 151st TERRACE
LEAWOOD, KS 66224
TEL: 785-212-0810
email: aengstrom@overlandpg.com
CONTACT: APRIL ENGSTROM

SURVEYOR/ENGINEER:
mma
civil engineering surveying landscape architecture planning
tbpels registration number: f - 2759
tbpels registration/license number: 10088000
519 east border
arlington, texas 76010
817-469-1671
fax: 817-274-8757
www.mmatexas.com
CONTACT: DOUGLAS COOPER, AICP

COPYRIGHT © 2023 MMA, INC.

SHEET 1 OF 1

MMA PROJECT NO. 3597-00-02

PLOTTED BY: CARLOS BEJARANO DATE: 5/15/2023 11:00 AM PATH: P:\3597-00\02\00\Land Survey\dgn\06 Platting\3597-00-02 Final Plat.dwg

GENERAL NOTES:

1. ALL MATERIALS AND WORKMANSHIP SHALL CONFORM TO THE LATEST EDITION OF THE CITY OF **DENTON** STANDARD CONSTRUCTION SPECIFICATION DOCUMENTS.
2. THE LOCATIONS OF ALL EXISTING UTILITIES INDICATED ON THE PLANS ARE TAKEN FROM EXISTING PUBLIC RECORDS OR PROVIDED BY VARIOUS OWNERS OF THE FACILITIES. THE CONTRACTOR IS SOLELY RESPONSIBLE FOR VERIFICATION OF VERTICAL AND HORIZONTAL LOCATIONS OF ALL UTILITIES PRIOR TO CONSTRUCTION. SUCH VERIFICATION SHALL BE CONSIDERED SUBSIDIARY TO ALL OTHER BID ITEMS. NOTIFY THE PROJECT INSPECTOR PROMPTLY OF ALL CONFLICTS OF THE WORK WITH EXISTING UTILITIES.
3. THE CONTRACTOR SHALL NOTIFY ALL UTILITY COMPANIES WITH FACILITIES IN PROJECT AREA 48 HOURS PRIOR TO CONSTRUCTION. THE CONTRACTOR SHALL COORDINATE WITH THE PROPER UTILITY COMPANIES TO RELOCATE, BRACE, AND SUPPORT ANY UTILITY IN CONFLICT WITH THE PROPOSED STRUCTURE OR CONSTRUCTION. ALL ASSOCIATED WORK SHALL BE CONSIDERED SUBSIDIARY TO ALL OTHER BID ITEMS. ANY REPAIR TO THE DAMAGED EXISTING UTILITIES SHALL BE THE COST OF CONTRACTOR.
4. PUBLIC OR PRIVATE UTILITY LINES MAY EXIST THAT ARE NOT SHOWN ON THE CONSTRUCTION PLANS. THE CONTRACTOR IS RESPONSIBLE FOR PROTECTING THE INTEGRITY OF THESE LINES. SUCH WORK SHALL BE CONSIDERED SUBSIDIARY TO ALL OTHER BID ITEMS.
5. A TEXAS DEPARTMENT OF TRANSPORTATION (TXDOT) PERMIT WILL BE REQUIRED WHEN ENTERING/CROSSING RIGHT-OF-WAY OF TXDOT. CONTRACTOR IS RESPONSIBLE FOR NOTIFYING TXDOT 48 HOURS PRIOR TO CONSTRUCTION.
6. TRENCH SAFETY PLAN SHALL BE STAMPED, SIGNED, AND DATED BY A LICENSED PROFESSIONAL ENGINEER AND SUBMITTED TO THE PROJECT ENGINEER AND PUBLIC WORKS INSPECTOR BEFORE OR DURING PRE-CONSTRUCTION MEETING.
7. THREE COPIES OF "STORM WATER POLLUTION PREVENTION PLAN (SWPPP)" SEALED BY A LICENSED PROFESSIONAL ENGINEER SHALL BE SUBMITTED TO THE PROJECT ENGINEER AT LEAST 10 WORKING DAYS PRIOR TO CONSTRUCTION. A "NOTICE OF INTENT" (NOI) SHALL BE INCLUDED IN THE SUBMITTAL IF THE PROJECT IS 5 ACRES IN SIZE OR LARGER. THE CONTRACTOR IS RESPONSIBLE FOR SUBMITTING A NOTICE OF TERMINATION (NOT) WITHIN 30 DAYS OF THE PROJECT COMPLETION.
8. A TRAFFIC CONTROL PLAN SHALL BE SUBMITTED TO PUBLIC WORKS/TRANSPORTATION DEPARTMENT – TRANSPORTATION DIVISION FOR APPROVAL FOR ANY UTILITY AND STREET WORK THAT WILL CAUSE LANE CLOSURES. AT LEAST ONE LANE TRAFFIC SHALL BE MAINTAINED AT ALL TIMES. THE CONTRACTOR IS RESPONSIBLE FOR PROVIDING AN APPROVED TRAFFIC CONTROL PLAN TO THE PROJECT INSPECTOR.
9. THE CONTRACTOR SHALL NOTIFY THE PROJECT INSPECTOR AT LEAST THREE (3) WORKING DAYS PRIOR TO CONSTRUCTION IN ORDER TO COORDINATE CONSTRUCTION, ADMINISTRATION, AND INSPECTION ACTIVITIES.
10. ALL WATER AND SANITARY SEWER WORK REQUIRED WITHIN THE PRIVATE PROPERTY SHALL BE PERFORMED BY A LICENSED PLUMBER. THE CONTRACTOR SHALL NOTIFY THE PROPERTY OWNER AND IMMEDIATELY COMMENCE SURFACE RESTORATION TO AN EQUAL OR BETTER CONDITION AFTER THE WATER AND SEWER WORK IS COMPLETE.
11. THE CONTRACTOR SHALL AVOID DAMAGING ANY EXISTING SPRINKLER SYSTEM THAT MAY BE IN THE CONSTRUCTION AREA. REMOVED OR DAMAGED SPRINKLER SYSTEM SHALL BE REPAIRED BY A LICENSED IRRIGATOR. THIS WORK SHALL BE CONSIDERED SUBSIDIARY TO ALL OTHER BID ITEMS.
12. THE CONTRACTOR SHALL AVOID DAMAGING ANY LANDSCAPING THAT MAY BE IN THE CONSTRUCTION AREA. REPLACING DAMAGED LANDSCAPING SHALL BE CONSIDERED SUBSIDIARY TO ALL OTHER BID ITEMS UNLESS OTHERWISE INDICATED ON THE CONSTRUCTION PLAN OR BID PROPOSAL.
13. REMOVAL OF TREES AND OTHER EXISTING STRUCTURES SHALL BE CONSIDERED SUBSIDIARY TO ALL OTHER BID ITEMS UNLESS OTHERWISE INDICATED ON THE CONSTRUCTION PLAN OR BID PROPOSAL OR APPROVED BY THE PROJECT INSPECTOR.
14. ALL TRENCHES SHALL BE BACKFILLED AT THE END OF EACH WORKING DAY. THE CONTRACTOR SHALL PROVIDE ALL FENCING AND/OR BARRICADES TO MAINTAIN PUBLIC SAFETY AROUND THE CONSTRUCTION AREA.
15. THE CONTRACTOR SHALL CLEAN UP DIRT AND DEBRIS IN THE PAVED AREAS TO ENSURE THE STREET IS IN DRIVABLE CONDITION AT THE END OF EACH WORKING DAY.
16. EXISTING MAIL BOXES SHALL BE PROTECTED AND MAIL SERVICE SHALL NOT BE INTERRUPTED.
17. ALL WATER AND SANITARY SEWER LINES USING DUCTILE IRON PIPE SHALL BE CLASS 350 UNLESS OTHERWISE SHOWN ON THE CONSTRUCTION PLANS OR BID ITEMS. ALL DUCTILE IRON PIPES SHALL BE WRAPPED BY POLYETHYLENE ENCASEMENT TO MEET ANSI/AWWA C105/A21.5 SPECIFICATIONS WITH A MINIMUM 8MIL THICKNESS.
18. ALL PIPE FITTINGS SHALL BE DUCTILE IRON AND RESTRAINED WITH BOTH CONCRETE BLOCKING AND MEGALUGS. ALL PIPE FITTINGS SHALL BE CONSIDERED SUBSIDIARY TO THE PIPE PRICES.
19. REMOVAL, SALVAGE, AND ABANDONMENT OF THE EXISTING WATER AND SEWER LINES SHALL BE CONSIDERED SUBSIDIARY TO ALL OTHER BID ITEMS.
20. REMOVAL AND HAUL-OFF EXCESS CONSTRUCTION MATERIALS FROM THE CONSTRUCTION SITE SHALL BE CONSIDERED SUBSIDIARY TO ALL OTHER BID ITEMS.
21. ALL EXISTING FENCES REMOVED OR DAMAGED BY CONSTRUCTION SHALL BE REPLACED OR RESTORED WITH SAME TYPE, STYLE, AND MATERIAL TO AN EQUAL OR BETTER CONDITION. THIS WORK SHALL BE CONSIDERED SUBSIDIARY TO ALL OTHER BID ITEMS UNLESS OTHERWISE INDICATED ON THE CONSTRUCTION PLAN OR BID PROPOSAL.
22. ALL TEMPORARY FENCES SHALL BE INSTALLED TO PROTECT PRIVATE PROPERTIES WHEN THE CONSTRUCTION WORK IS PERFORMED WITHIN THE EASEMENTS. THIS WORK SHALL BE CONSIDERED SUBSIDIARY TO ALL OTHER BID ITEMS UNLESS OTHERWISE INDICATED ON THE CONSTRUCTION PLAN OR BID PROPOSAL.

WATER NOTES:

1. ALL WATER MAINS USING PVC PIPE SHALL BE IN COMPLIANCE WITH AWWA C900 AND DR-14.
2. UTILITY SAND MEETING THE REQUIREMENTS OF CITY OF DENTON SPECIFICATIONS 33.05.05 SECTION 2.2.A.1 SHALL BE USED FOR ALL WATER MAINS.
3. THERE SHALL BE A MINIMUM COVER OF FORTY-TWO INCHES (42") OVER THE WATER PIPE AS MEASURED FROM THE TOP OF THE PIPE TO THE EXISTING GROUND, OR THE PROPOSED FINISHED GRADES, WHICHEVER IS GREATER.
4. FIRE HYDRANTS SHALL BE PLACED A MINIMUM DISTANCE OF AND AS CLOSE TO 2 FEET BEHIND BACK OF CURB AS POSSIBLE. ALTERNATE LOCATIONS MUST BE APPROVED BY CITY OF DENTON WATER DISTRIBUTION.
5. WHEN REPLACING WATER SERVICES, ALL EXISTING WATER METER BOXES SHALL BE REPLACED AND THE METERS SHALL BE RELOCATED TO THREE FEET (3') BACK OF THE CURB OR AS SHOWN ON THE CONSTRUCTION PLANS.
6. ALL VALVE BOXES SHALL BE ADJUSTED UP TO THE FINISHED PAVEMENT GRADE. THIS WORK SHALL BE CONSIDERED SUBSIDIARY TO ALL OTHER BID ITEMS UNLESS OTHERWISE INDICATED ON THE CONSTRUCTION PLAN OR BID PROPOSAL.
7. NO WELDED OUTLET IS ALLOWED FOR THE DUCTILE IRON WATER LINE.

SANITARY SEWER NOTES:

1. ALL SANITARY SEWER MAINS USING PVC PIPE SHALL BE SDR-26, HEAVY WALL, IN COMPLIANCE WITH ASTM D-3034 LATEST REVISION.
2. CRUSHED ROCK MEETING THE REQUIREMENTS OF CITY OF DENTON SPECIFICATIONS 33.05.05 SECTION 2.2.A.2 SHALL BE USED FOR ALL SANITARY SEWER MAINS.
3. THE CONTRACTOR SHALL ENSURE ALL THE EXISTING SEWER SERVICES THAT CAN BE RECONNECTED OR REROUTED TO THE NEW MAINS. THE CONTRACTOR SHALL NOTIFY THE PROJECT ENGINEER ANY POTENTIAL CONFLICTS PRIOR TO CONSTRUCTION SO THE MODIFICATION CAN BE MADE IF NECESSARY.
4. THE CONTRACTOR SHALL CONDUCT A PRE-CONSTRUCTION TELEVISION INSPECTION OF ALL THE EXISTING SEWER LINES TO BE ABANDONED OR REHABILITATED BY OTHER THAN OPEN CUT TO VERIFY THE SERVICE LOCATIONS AND LINE CONDITIONS. THIS WORK SHALL BE CONSIDERED SUBSIDIARY TO ALL OTHER BID ITEMS UNLESS OTHERWISE INDICATED ON THE CONSTRUCTION PLAN OR BID PROPOSAL.
5. MINIMUM LATERAL SIZE 6" IS REQUIRED FOR ANY DEVELOPMENT ABOVE SINGLE FAMILY RESIDENTIAL.
6. THE CONTRACTOR SHALL VERIFY THE EXISTING SANITARY SEWER SLOPE PRIOR TO MAKING CONNECTION. SLOPE OF THE NEW MAIN AND THE EXISTING MAIN SHALL MATCH UNLESS OTHERWISE INDICATED ON THE CONSTRUCTION PLAN. A REDUCER SHALL BE USED WHEN A LARGER SIZE LINE CONNECTS TO A SMALLER SIZE LINE.
7. THE CONTRACTOR SHALL VERIFY THE SIZE, ELEVATION, AND MATERIAL OF THE EXISTING LINE PRIOR TO ORDERING PREFABRICATED MANHOLE.
8. REWORK THE INVERT WHERE TYING INTO AN EXISTING MANHOLE.
9. BYPASS PUMP REQUIRED FOR PERFORMING CONSTRUCTION WORK SHALL BE CONSIDERED SUBSIDIARY TO ALL OTHER BID ITEMS UNLESS OTHERWISE INDICATED ON THE CONSTRUCTION PLAN OR BID PROPOSAL. A BYPASS PUMPING PLAN MUST BE SUBMITTED AND APPROVED BY THE CITY OF DENTON PRIOR TO ANY BYPASS PUMPING OPERATIONS MAY TAKE PLACE.
10. ALL MANHOLE AND CLEANOUT SHALL BE ADJUSTED UP TO THE FINISHED PAVEMENT GRADE. THIS WORK SHALL BE CONSIDERED SUBSIDIARY TO ALL OTHER BID ITEMS UNLESS OTHERWISE INDICATED ON THE CONSTRUCTION PLAN OR BID PROPOSAL.

GENERAL UTILITY NOTES:

ALL EXISTING UTILITY DATA IS PROVIDED FOR INFORMATION ONLY. ALTHOUGH THIS DATA IS SHOWN AS ACCURATELY AS POSSIBLE, THE CONTRACTOR IS CAUTIONED THAT THE OWNER AND THE ENGINEER NEITHER ASSUME NOR IMPLY ANY RESPONSIBILITY FOR THE ACCURACY OF THIS DATA. IT SHALL BE THE CONTRACTOR'S RESPONSIBILITY TO CONTACT THE UTILITY AFFECTED AND VERIFY THESE LOCATIONS AND ELEVATIONS PRIOR TO CONSTRUCTION.

CALL TEXAS 811 OR OTHER UTILITY LOCATING SERVICES 48 HOURS PRIOR TO CONSTRUCTION ACTIVITY. MMA, INC. IS NOT RESPONSIBLE FOR KNOWING ALL EXISTING UTILITIES OR DEPICTING EXACT LOCATIONS OF UTILITIES ON DRAWINGS.

811 Know what's **below.** **Call** before you dig.

SOURCE BENCHMARK:

CITY OF DENTON MONUMENT #2011 – 3.5" ALUMINUM CAP ON ROD "2011" LOCATED AT JUNCTION OF FRAME ROAD NORTH OF CONCRETE CREEK RUNNING PARALLEL WITH MCKINNEY APPROXIMATELY 37.7' FROM POWER POLE TO THE WEST
A: 611.24'
NAD83 TXNC (GRID)
N: 7128266.50'
E: 2389088.77'

SITE BENCHMARK:

BM #1 – "X" CUT IN SQUARE LOCATED ON THE NORTHWEST CORNER OF AN INLET OFF THE EAST BOUND SIDE OF WILLOWWOOD STREET AND APPROXIMATELY 42' WEST FROM THE CENTERLINE OF JACQUELINE DRIVE

ELEV: 686.09'
NAD83 TXNC (GRID)
N: 7120793.43'
E: 2383257.97'

BM #2 – "X" CUT IN SQUARE LOCATED APPROXIMATELY 272' EAST FROM THE CENTERLINE OF MERCEDES ROAD AT THE END OF OAKWOOD DRIVE ON THE SOUTH SIDE ON THE CURB APPROXIMATELY 50' WEST OF THE CHURCH

ELEV: 688.85'
NAD83 TXNC (GRID)
N: 7121272.19'
E: 2383152.20'

BEARINGS & COORDINATE VALUES SHOWN HEREON ARE IN REFERENCE TO THE NAD83 – TEXAS COORDINATE SYSTEM – NORTH CENTRAL ZONE, 4202, BASED ON GPS OBSERVATIONS UTILIZING THE LEICA GPS REFERENCE NETWORK. ALL DISTANCES SHOWN HEREON WERE ADJUSTED TO SURFACE USING A COMBINED SCALE FACTOR OF 1.0001526521 (0.999847371200), BASE POINT OF 0,0,0.

THE RESERVES AT MAGNOLIA
DENTON, TEXAS

GENERAL NOTES

mma
civil engineering surveying landscape architecture planning
tbpels registration number: f - 2759
tbpels registration/license number: 10088000
519 east border
arlington, texas 76010
817-469-1671
fax: 817-274-8757
www.mmatexas.com

5/16/2023

STATE OF TEXAS
ROBERT J. CRONIN JR.
122288
LICENSED PROFESSIONAL ENGINEER

PROJECT NUMBER:	3597-00-02
PROJECT MANAGER:	R. CRONIN
DRAWN BY:	G. SANCHEZ
CHECKED BY:	A. TAYLOR
ISSUE DATE:	5/16/2023

REV.	DATE	DESCRIP.	BY

SHEET CONTENT:

GENERAL NOTES

SHEET NO:

C1.0

COPYRIGHT © 2023 MMA, INC.

PLOTTED BY: ISIS HERNANDEZ DATE: 5/16/2023 11:31 AM PATH: P:\3597-00-02\700 Land Development\703 Construction Documents\Design\Plot Sheets\GENERAL NOTES.dwg

THE RESERVES AT MAGNOLIA
DENTON, TEXAS

DEMOLITION PLAN

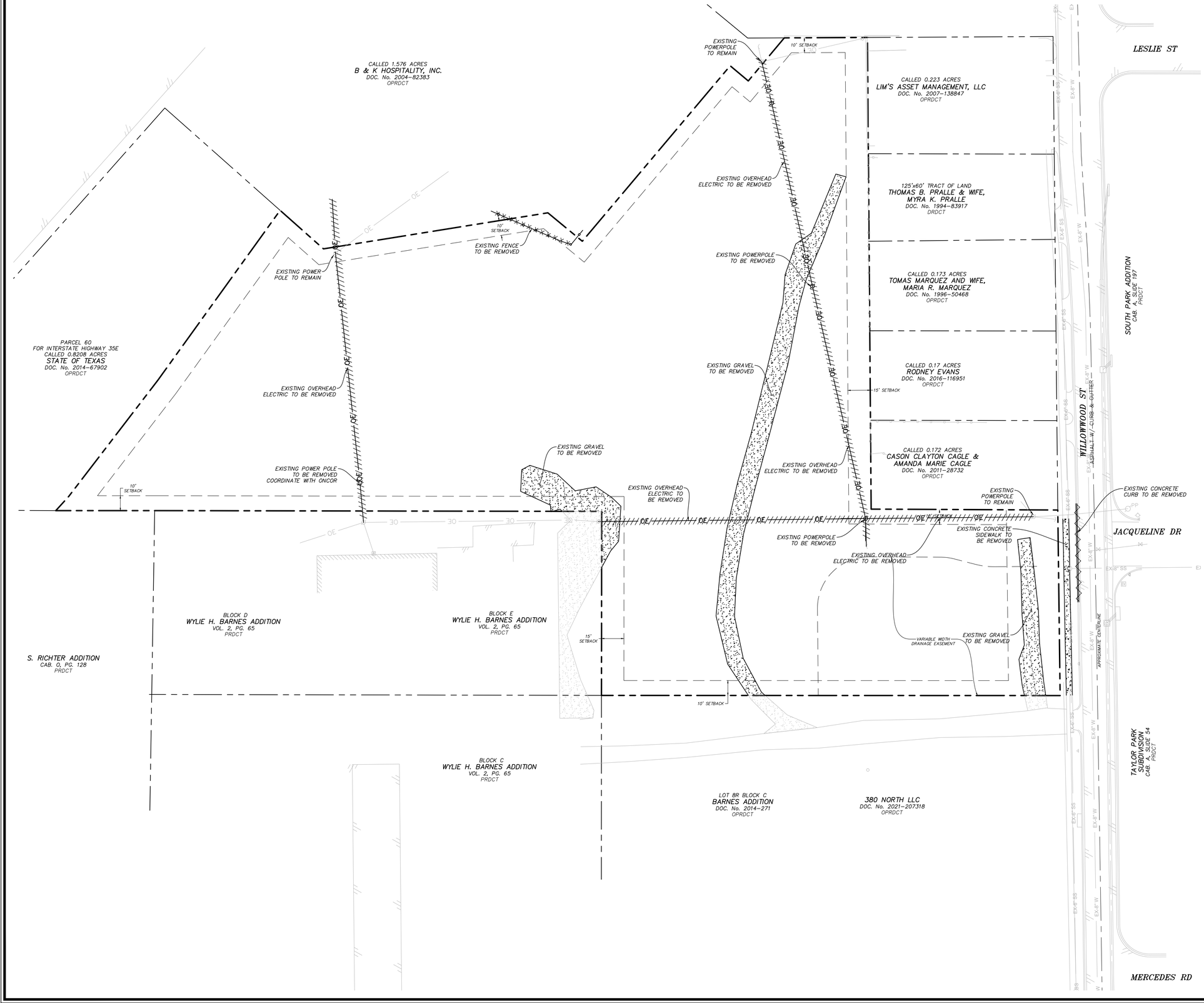

LEGEND:

- REMOVE EXIST. CURB & GUTTER
- REMOVE EXIST. PAVEMENT
- REMOVE EXIST. GRAVEL
- REMOVE EX. FENCE
- REMOVE OVERHEAD ELEC.

NOTES:

1. CONTRACTOR TO DISPOSE OF ALL DEMOLITION DEBRIS AT AN APPROVED DISPOSAL FACILITY.
2. CONTRACTOR IS RESPONSIBLE FOR LOCATING EXISTING UTILITIES AND PROTECTING THEM THROUGHOUT CONSTRUCTION.
3. CONTRACTOR IS RESPONSIBLE FOR OBTAINING ALL PERMITS REQUIRED FOR SITE DEMOLITION.
4. ALL WASTE WATER AND SANITARY SEWER SERVICES TO BE ABANDONED SHALL BE DISCONNECTED AND CAPPED IN ACCORDANCE WITH JURISDICTIONAL REQUIREMENTS.
5. REFER TO SITE AND GRADING PLAN FOR CONSTRUCTION LIMITS.
6. CONTRACTOR TO MAINTAIN EXISTING DRAINAGE PATTERNS.

GENERAL UTILITY NOTES:

ALL EXISTING UTILITY DATA IS PROVIDED FOR INFORMATION ONLY. ALTHOUGH THIS DATA IS SHOWN AS ACCURATELY AS POSSIBLE, THE CONTRACTOR IS CAUTIONED THAT THE OWNER AND THE ENGINEER NEITHER ASSUME NOR IMPLY ANY RESPONSIBILITY FOR THE ACCURACY OF THIS DATA. IT SHALL BE THE CONTRACTOR'S RESPONSIBILITY TO CONTACT THE UTILITY AFFECTED AND VERIFY THESE LOCATIONS AND ELEVATIONS PRIOR TO CONSTRUCTION.

CALL TEXAS 811 OR OTHER UTILITY LOCATING SERVICES 48 HOURS PRIOR TO CONSTRUCTION ACTIVITY. MMA INC. IS NOT RESPONSIBLE FOR KNOWING ALL EXISTING UTILITIES OR DEPICTING EXACT LOCATIONS OF UTILITIES ON DRAWINGS.

811 Know what's below. Call before you dig.

SOURCE BENCHMARK:

CITY OF DENTON MONUMENT #2011 – 3.5" ALUMINUM CAP ON ROD "2011" LOCATED AT JUNCTION OF FRAME ROAD NORTH OF CONCRETE CREEK RUNNING PARALLEL WITH MCKINNEY APPROXIMATELY 37.7' FROM POWER POLE TO THE WEST
A: 611.24'
NAD83 TXNC (GRID)
N: 7128266.50'
E: 2389088.77'

SITE BENCHMARK:

BM #1 – "X" CUT IN SQUARE LOCATED ON THE NORTHWEST CORNER OF AN INLET OFF THE EAST BOUND SIDE OF WILLOWWOOD STREET AND APPROXIMATELY 42' WEST FROM THE CENTERLINE OF JACQUELINE DRIVE

ELEV: 686.09'
NAD83 TXNC (GRID)
N: 7120793.43'
E: 2383257.97'

BM #2 – "X" CUT IN SQUARE LOCATED APPROXIMATELY 272' EAST FROM THE CENTERLINE OF MERCEDES ROAD AT THE END OF OAKWOOD DRIVE ON THE SOUTH SIDE ON THE CURB APPROXIMATELY 50' WEST OF THE CHURCH

ELEV: 688.85'
NAD83 TXNC (GRID)
N: 7121272.19'
E: 2383152.20'

BEARINGS & COORDINATE VALUES SHOWN HEREON ARE IN REFERENCE TO THE NAD83 – TEXAS COORDINATE SYSTEM – NORTH CENTRAL ZONE, 4202, BASED ON GPS OBSERVATIONS UTILIZING THE LEICA GPS REFERENCE NETWORK. ALL DISTANCES SHOWN HEREON WERE ADJUSTED TO SURFACE USING A COMBINED SCALE FACTOR OF 1.0001526521 (0.999847371200), BASE POINT OF 0,0,0.

mma
civil engineering surveying landscape architecture planning
tbpels registration number: f - 2759
tbpels registration/license number: 10088000
519 east border
arlington, texas 76010
817-469-1671
fax: 817-274-8757
www.mmatexas.com

5/16/2023

STATE OF TEXAS
ROBERT J. CRONIN JR.
122288
LICENSED PROFESSIONAL ENGINEER

PROJECT NUMBER:	3597-00-02
PROJECT MANAGER:	R. CRONIN
DRAWN BY:	G. SANCHEZ
CHECKED BY:	A. TAYLOR
ISSUE DATE:	5/16/2023

REV.	DATE	DESCRIP.	BY

SHEET CONTENT:

DEMOLITION PLAN

SHEET NO:

C2.0

COPYRIGHT © 2023 MMA, INC.

PLOTTED BY: ISIS HERNANDEZ DATE: 5/16/2023 11:31 AM PATH: P:\3597-00-02\700 Land Development\703 Construction Documents\Design\Plot Sheets\DEMOLITION PLAN.dwg

THE RESERVES AT MAGNOLIA
DENTON, TEXAS

SITE PLAN

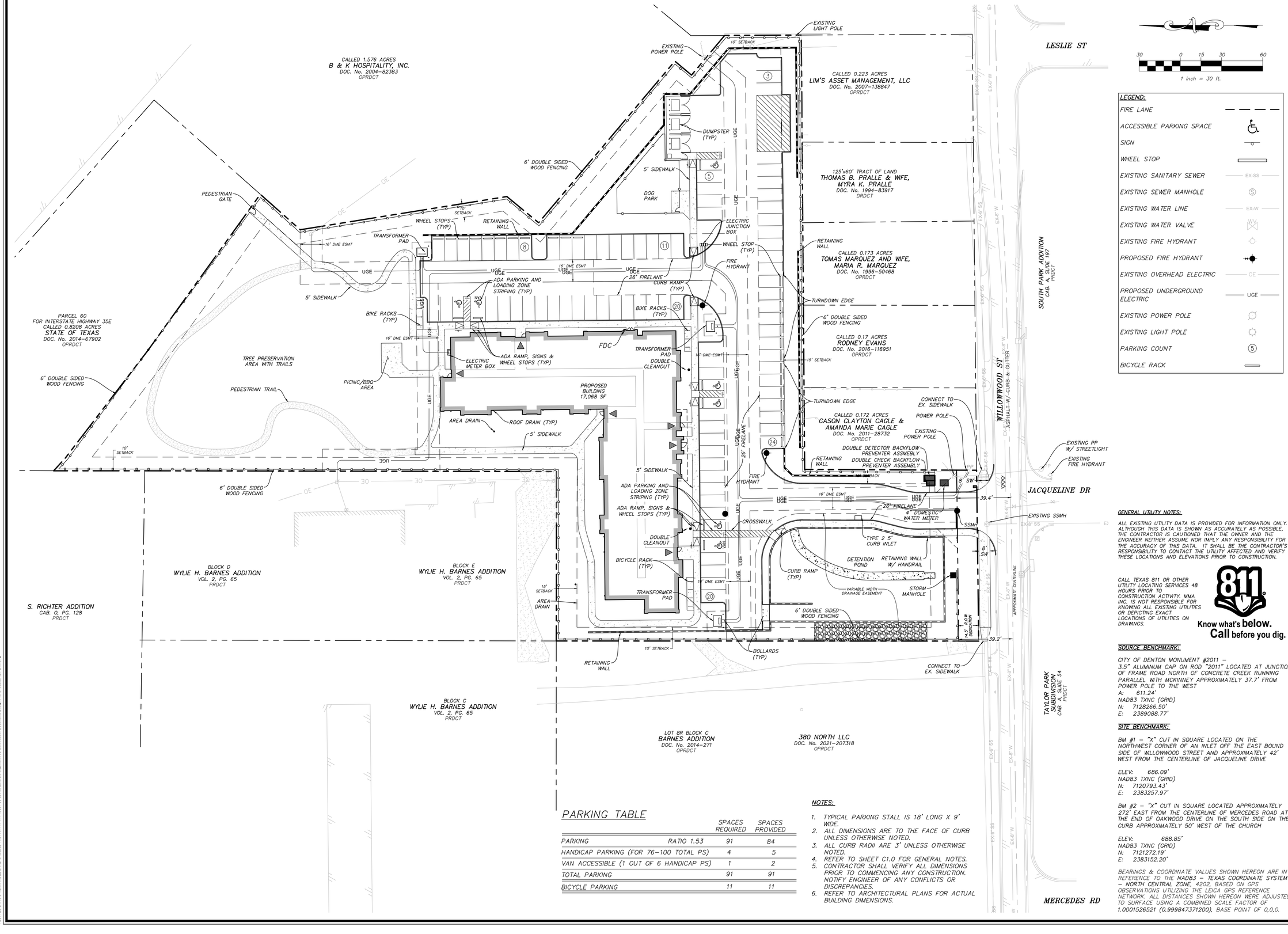

LEGEND:

FIRE LANE	
ACCESSIBLE PARKING SPACE	
SIGN	
WHEEL STOP	
EXISTING SANITARY SEWER	EX-SS
EXISTING SEWER MANHOLE	S
EXISTING WATER LINE	EX-W
EXISTING WATER VALVE	WV
EXISTING FIRE HYDRANT	
PROPOSED FIRE HYDRANT	
EXISTING OVERHEAD ELECTRIC	OE
PROPOSED UNDERGROUND ELECTRIC	UGE
EXISTING POWER POLE	
EXISTING LIGHT POLE	
PARKING COUNT	5
BICYCLE RACK	

PARKING TABLE

	SPACES REQUIRED	SPACES PROVIDED
PARKING RATIO 1.53	91	84
HANDICAP PARKING (FOR 76-100 TOTAL PS)	4	5
VAN ACCESSIBLE (1 OUT OF 6 HANDICAP PS)	1	2
TOTAL PARKING	91	91
BICYCLE PARKING	11	11

NOTES:

1. TYPICAL PARKING STALL IS 18' LONG X 9' WIDE.
2. ALL DIMENSIONS ARE TO THE FACE OF CURB UNLESS OTHERWISE NOTED.
3. ALL CURB RADII ARE 3' UNLESS OTHERWISE NOTED.
4. REFER TO SHEET C1.0 FOR GENERAL NOTES.
5. CONTRACTOR SHALL VERIFY ALL DIMENSIONS PRIOR TO COMMENCING ANY CONSTRUCTION. NOTIFY ENGINEER OF ANY CONFLICTS OR DISCREPANCIES.
6. REFER TO ARCHITECTURAL PLANS FOR ACTUAL BUILDING DIMENSIONS.

GENERAL UTILITY NOTES:

ALL EXISTING UTILITY DATA IS PROVIDED FOR INFORMATION ONLY. ALTHOUGH THIS DATA IS SHOWN AS ACCURATELY AS POSSIBLE, THE CONTRACTOR IS CAUTIONED THAT THE OWNER AND THE ENGINEER NEITHER ASSUME NOR IMPLY ANY RESPONSIBILITY FOR THE ACCURACY OF THIS DATA. IT SHALL BE THE CONTRACTOR'S RESPONSIBILITY TO CONTACT THE UTILITY AFFECTED AND VERIFY THESE LOCATIONS AND ELEVATIONS PRIOR TO CONSTRUCTION.

CALL TEXAS 811 OR OTHER UTILITY LOCATING SERVICES 48 HOURS PRIOR TO CONSTRUCTION ACTIVITY. MMA, INC. IS NOT RESPONSIBLE FOR KNOWING ALL EXISTING UTILITIES OR DEPICTING EXACT LOCATIONS OF UTILITIES ON DRAWINGS.

811 Know what's below. Call before you dig.

SOURCE BENCHMARK:

CITY OF DENTON MONUMENT #2011 – 3.5" ALUMINUM CAP ON ROD "2011" LOCATED AT JUNCTION OF FRAME ROAD NORTH OF CONCRETE CREEK RUNNING PARALLEL WITH MCKINNEY APPROXIMATELY 37.7' FROM POWER POLE TO THE WEST
A: 611.24'
NAD83 TXNC (GRID)
N: 7128266.50'
E: 2389088.77'

SITE BENCHMARK:

BM #1 – "X" CUT IN SQUARE LOCATED ON THE NORTHWEST CORNER OF AN INLET OFF THE EAST BOUND SIDE OF WILLOWWOOD STREET AND APPROXIMATELY 42' WEST FROM THE CENTERLINE OF JACQUELINE DRIVE

ELEV: 686.09'
NAD83 TXNC (GRID)
N: 7120793.43'
E: 2383257.97'

BM #2 – "X" CUT IN SQUARE LOCATED APPROXIMATELY 272' EAST FROM THE CENTERLINE OF MERCEDES ROAD AT THE END OF OAKWOOD DRIVE ON THE SOUTH SIDE ON THE CURB APPROXIMATELY 50' WEST OF THE CHURCH

ELEV: 688.85'
NAD83 TXNC (GRID)
N: 7121272.19'
E: 2383152.20'

BEARINGS & COORDINATE VALUES SHOWN HEREON ARE IN REFERENCE TO THE NAD83 – TEXAS COORDINATE SYSTEM – NORTH CENTRAL ZONE, 4202, BASED ON GPS OBSERVATIONS UTILIZING THE LEICA GPS REFERENCE NETWORK. ALL DISTANCES SHOWN HEREON WERE ADJUSTED TO SURFACE USING A COMBINED SCALE FACTOR OF 1.0001526521 (0.999847371200). BASE POINT OF 0,0,0.

mma
civil engineering surveying landscape architecture planning
tbpels registration number: f - 2759
tbpels registration/license number: 10088000
519 east border
arlington, texas 76010
817-469-1671
fax: 817-274-8757
www.mmatexas.com

5/16/2023

STATE OF TEXAS
ROBERT J. CRONIN JR.
122288
LICENSED PROFESSIONAL ENGINEER

PROJECT NUMBER:	3597-00-02
PROJECT MANAGER:	R. CRONIN
DRAWN BY:	G. SANCHEZ
CHECKED BY:	A. TAYLOR
ISSUE DATE:	5/16/2023

REV.	DATE	DESCRIP.	BY

SHEET CONTENT:

SITE PLAN

SHEET NO:

C3.0

COPYRIGHT © 2023 MMA, INC.

PLOTTED BY: ERIS HERNANDEZ DATE: 5/16/2023 11:31 AM PATH: P:\3597-00-02\700 Land Development\703 Construction Documents\Design\Plot Sheets\SITE PLAN.dwg

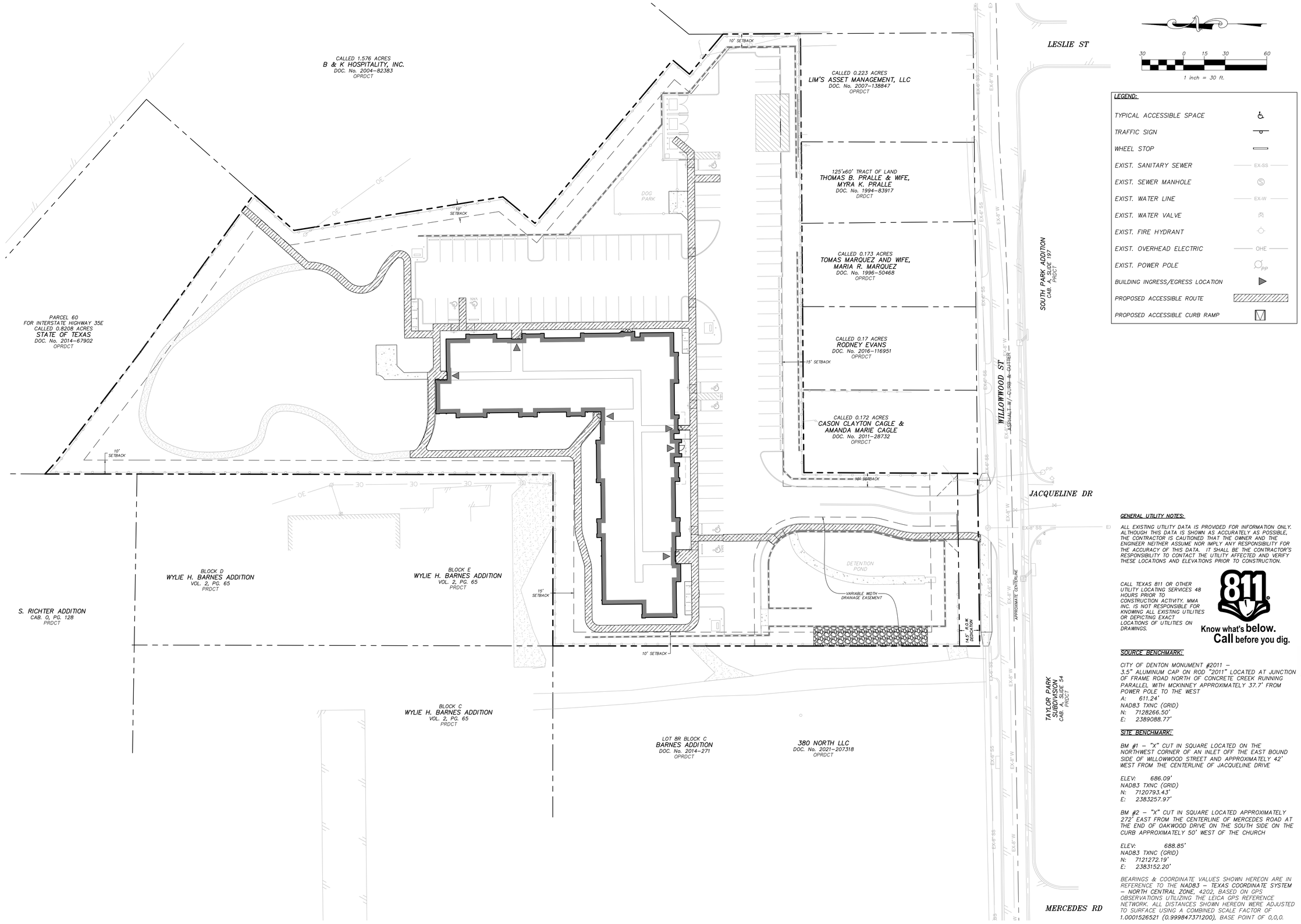

LEGEND:

- TYPICAL ACCESSIBLE SPACE
- TRAFFIC SIGN
- WHEEL STOP
- EXIST. SANITARY SEWER
- EXIST. SEWER MANHOLE
- EXIST. WATER LINE
- EXIST. WATER VALVE
- EXIST. FIRE HYDRANT
- EXIST. OVERHEAD ELECTRIC
- EXIST. POWER POLE
- BUILDING INGRESS/EGRESS LOCATION
- PROPOSED ACCESSIBLE ROUTE
- PROPOSED ACCESSIBLE CURB RAMP

GENERAL UTILITY NOTES:

ALL EXISTING UTILITY DATA IS PROVIDED FOR INFORMATION ONLY. ALTHOUGH THIS DATA IS SHOWN AS ACCURATELY AS POSSIBLE, THE CONTRACTOR IS CAUTIONED THAT THE OWNER AND THE ENGINEER NEITHER ASSUME NOR IMPLY ANY RESPONSIBILITY FOR THE ACCURACY OF THIS DATA. IT SHALL BE THE CONTRACTOR'S RESPONSIBILITY TO CONTACT THE UTILITY AFFECTED AND VERIFY THESE LOCATIONS AND ELEVATIONS PRIOR TO CONSTRUCTION.

CALL TEXAS 811 OR OTHER UTILITY LOCATING SERVICES 48 HOURS PRIOR TO CONSTRUCTION ACTIVITY. MMA INC. IS NOT RESPONSIBLE FOR KNOWING ALL EXISTING UTILITIES OR DEPICTING EXACT LOCATIONS OF UTILITIES ON DRAWINGS.

811 Know what's below. Call before you dig.

SOURCE BENCHMARK:

CITY OF DENTON MONUMENT #2011 – 3.5" ALUMINUM CAP ON ROD "2011" LOCATED AT JUNCTION OF FRAME ROAD NORTH OF CONCRETE CREEK RUNNING PARALLEL WITH MCKINNEY APPROXIMATELY 37.7' FROM POWER POLE TO THE WEST
A: 611.24'
NAD83 TXNC (GRID)
N: 7128266.50'
E: 2389088.77'

SITE BENCHMARK:

BM #1 – "X" CUT IN SQUARE LOCATED ON THE NORTHWEST CORNER OF AN INLET OFF THE EAST BOUND SIDE OF WILLOWWOOD STREET AND APPROXIMATELY 42' WEST FROM THE CENTERLINE OF JACQUELINE DRIVE

ELEV: 686.09'
NAD83 TXNC (GRID)
N: 7120793.43'
E: 2383257.97'

BM #2 – "X" CUT IN SQUARE LOCATED APPROXIMATELY 272' EAST FROM THE CENTERLINE OF MERCEDES ROAD AT THE END OF OAKWOOD DRIVE ON THE SOUTH SIDE ON THE CURB APPROXIMATELY 50' WEST OF THE CHURCH

ELEV: 688.85'
NAD83 TXNC (GRID)
N: 7121272.19'
E: 2383152.20'

BEARINGS & COORDINATE VALUES SHOWN HEREON ARE IN REFERENCE TO THE NAD83 – TEXAS COORDINATE SYSTEM – NORTH CENTRAL ZONE, 4202, BASED ON GPS OBSERVATIONS UTILIZING THE LEICA GPS REFERENCE NETWORK. ALL DISTANCES SHOWN HEREON WERE ADJUSTED TO SURFACE USING A COMBINED SCALE FACTOR OF 1.0001526521 (0.999847371200), BASE POINT OF 0,0,0.

THE RESERVES AT MAGNOLIA
DENTON, TEXAS

ACCESSIBLE ROUTE PLAN

m|m|a
civil engineering surveying landscape architecture planning
tbpels registration number: f – 2759
tbpels registration/license number: 10088000
519 east border
arlington, texas 76010
817-469-1671
fax: 817-274-8757
www.mmatexas.com

5/16/2023
STATE OF TEXAS
ROBERT J. CRONIN JR
122288
LICENSED PROFESSIONAL ENGINEER

PROJECT NUMBER:	3597-00-02
PROJECT MANAGER:	R. CRONIN
DRAWN BY:	G. SANCHEZ
CHECKED BY:	A. TAYLOR
ISSUE DATE:	5/16/2023

REV.	DATE	DESCRIP.	BY

SHEET CONTENT:

ACCESSIBLE ROUTE PLAN

SHEET NO:

C3.1

COPYRIGHT © 2023 MMA, INC.

PLOTTED BY: ISIS HERNANDEZ DATE: 5/16/2023 11:31 AM PATH: P:\3597-00-02\700 Land Development\703 Construction Documents\Design\Plot Sheets\ACCESSIBLE ROUTE PLAN.dwg

THE RESERVES AT MAGNOLIA
DENTON, TEXAS

DIMENSION CONTROL PLAN

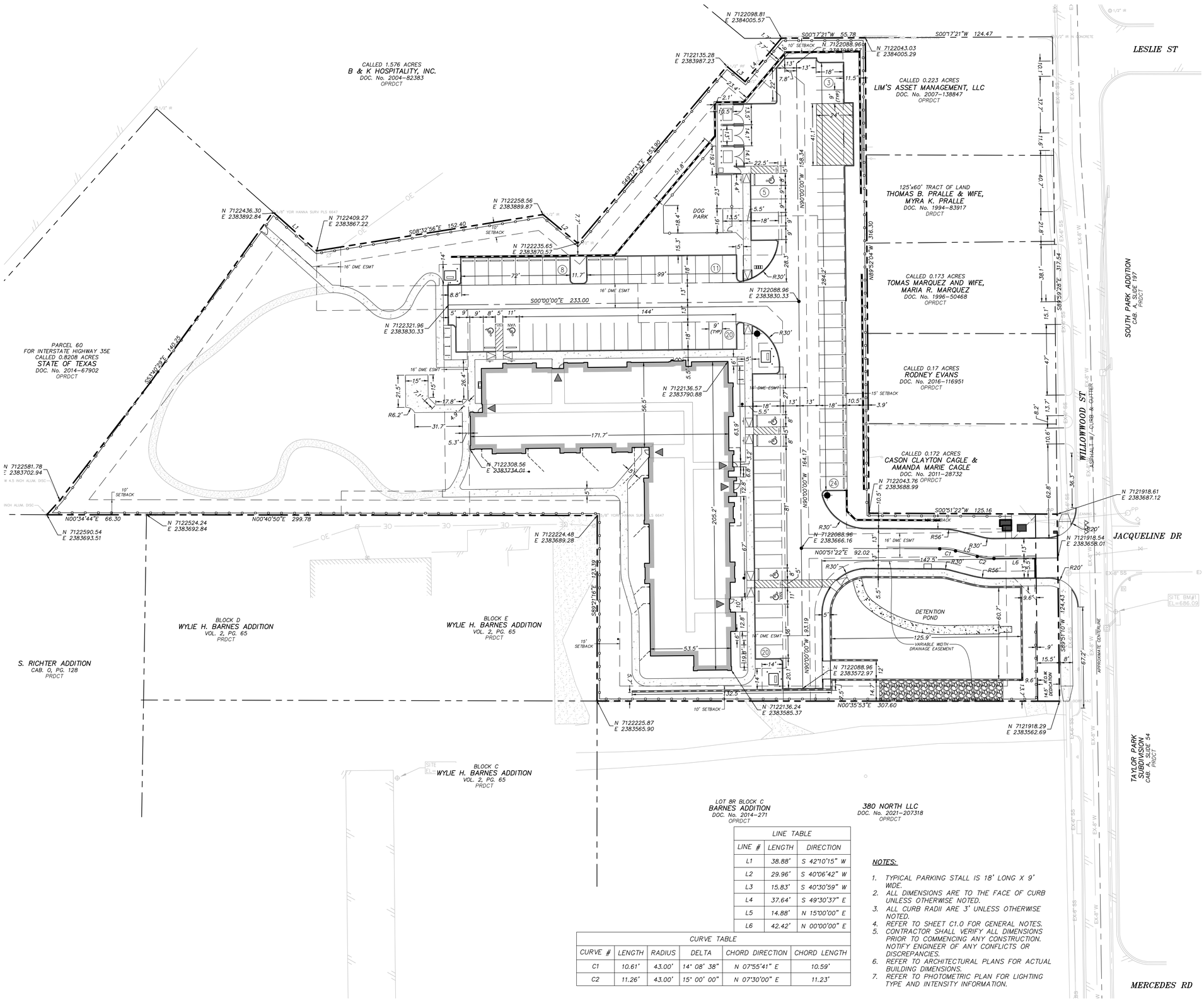

LINE TABLE		
LINE #	LENGTH	DIRECTION
L1	38.88'	S 42°10'15" W
L2	29.96'	S 40°06'42" W
L3	15.83'	S 49°30'37" E
L4	37.64'	S 49°30'37" E
L5	14.88'	N 15°00'00" E
L6	42.42'	N 00°00'00" E

CURVE TABLE					
CURVE #	LENGTH	RADIUS	DELTA	CHORD DIRECTION	CHORD LENGTH
C1	10.61'	43.00'	14° 08' 38"	N 07°55'41" E	10.59'
C2	11.26'	43.00'	15° 00' 00"	N 07°30'00" E	11.23'

NOTES:

1. TYPICAL PARKING STALL IS 18' LONG X 9' WIDE.
2. ALL DIMENSIONS ARE TO THE FACE OF CURB UNLESS OTHERWISE NOTED.
3. ALL CURB RADII ARE 3' UNLESS OTHERWISE NOTED.
4. REFER TO SHEET C1.0 FOR GENERAL NOTES.
5. CONTRACTOR SHALL VERIFY ALL DIMENSIONS PRIOR TO COMMENCING ANY CONSTRUCTION. NOTIFY ENGINEER OF ANY CONFLICTS OR DISCREPANCIES.
6. REFER TO ARCHITECTURAL PLANS FOR ACTUAL BUILDING DIMENSIONS.
7. REFER TO PHOTOMETRIC PLAN FOR LIGHTING TYPE AND INTENSITY INFORMATION.

LEGEND:

- FIRE LANE
- ACCESSIBLE PARKING SPACE
- SIGN
- WHEEL STOP
- EXISTING SANITARY SEWER — EX-SS
- EXISTING SEWER MANHOLE
- EXISTING WATER LINE — EX-W
- EXISTING WATER VALVE
- EXISTING FIRE HYDRANT
- PROPOSED FIRE HYDRANT
- EXISTING OVERHEAD ELECTRIC — OHE
- EXISTING POWER POLE
- EXISTING LIGHT POLE
- PARKING COUNT (5)

GENERAL UTILITY NOTES:

ALL EXISTING UTILITY DATA IS PROVIDED FOR INFORMATION ONLY. ALTHOUGH THIS DATA IS SHOWN AS ACCURATELY AS POSSIBLE, THE CONTRACTOR IS CAUTIONED THAT THE OWNER AND THE ENGINEER NEITHER ASSUME NOR IMPLY ANY RESPONSIBILITY FOR THE ACCURACY OF THIS DATA. IT SHALL BE THE CONTRACTOR'S RESPONSIBILITY TO CONTACT THE UTILITY AFFECTED AND VERIFY THESE LOCATIONS AND ELEVATIONS PRIOR TO CONSTRUCTION.

CALL TEXAS 811 OR OTHER UTILITY LOCATING SERVICES 48 HOURS PRIOR TO CONSTRUCTION ACTIVITY. MMA INC. IS NOT RESPONSIBLE FOR KNOWING ALL EXISTING UTILITIES OR DEPICTING EXACT LOCATIONS OF UTILITIES ON DRAWINGS.

811 Know what's below. Call before you dig.

SOURCE BENCHMARK:

CITY OF DENTON MONUMENT #2011 – 3.5" ALUMINUM CAP ON ROD "2011" LOCATED AT JUNCTION OF FRAME ROAD NORTH OF CONCRETE CREEK RUNNING PARALLEL WITH MCKINNEY APPROXIMATELY 37.7' FROM POWER POLE TO THE WEST
A: 611.24'
NAD83 TXNC (GRID)
N: 7128266.50'
E: 2389088.77'

SITE BENCHMARK:

BM #1 – "X" CUT IN SQUARE LOCATED ON THE NORTHWEST CORNER OF AN INLET OFF THE EAST BOUND SIDE OF WILLOWWOOD STREET AND APPROXIMATELY 42' WEST FROM THE CENTERLINE OF JACQUELINE DRIVE

ELEV: 686.09'
NAD83 TXNC (GRID)
N: 7120793.43'
E: 2383257.97'

BM #2 – "X" CUT IN SQUARE LOCATED APPROXIMATELY 272' EAST FROM THE CENTERLINE OF MERCEDES ROAD AT THE END OF OAKWOOD DRIVE ON THE SOUTH SIDE ON THE CURB APPROXIMATELY 50' WEST OF THE CHURCH

ELEV: 688.85'
NAD83 TXNC (GRID)
N: 7121272.19'
E: 2383152.20'

BEARINGS & COORDINATE VALUES SHOWN HEREON ARE IN REFERENCE TO THE NAD83 – TEXAS COORDINATE SYSTEM – NORTH CENTRAL ZONE, 4202, BASED ON GPS OBSERVATIONS UTILIZING THE LEICA GPS REFERENCE NETWORK. ALL DISTANCES SHOWN HEREON WERE ADJUSTED TO SURFACE USING A COMBINED SCALE FACTOR OF 1.0001526521 (0.9998473712OO), BASE POINT OF 0,0,0.

mma
civil engineering surveying landscape architecture planning
tbpels registration number: f – 2759
tbpels registration/license number: 10088000
519 east border
arlington, texas 76010
817-469-1671
fax: 817-274-8757
www.mmatexas.com

5/16/2023
STATE OF TEXAS
ROBERT J. CRONIN JR.
122288
LICENSED PROFESSIONAL ENGINEER

PROJECT NUMBER:	3597-00-02
PROJECT MANAGER:	R. CRONIN
DRAWN BY:	G. SANCHEZ
CHECKED BY:	A. TAYLOR
ISSUE DATE:	5/16/2023

REV.	DATE	DESCRIP.	BY

SHEET CONTENT:
DIMENSION CONTROL PLAN

SHEET NO:
C4.0

COPYRIGHT © 2023 MMA, INC.

PLOTTED BY: ISIS HERNANDEZ DATE: 5/16/2023 11:32 AM PATH: P:\3597-00-02\700 Land Development\703 Construction Documents\Design\Plot Sheets\DIMENSION CONTROL PLAN.dwg

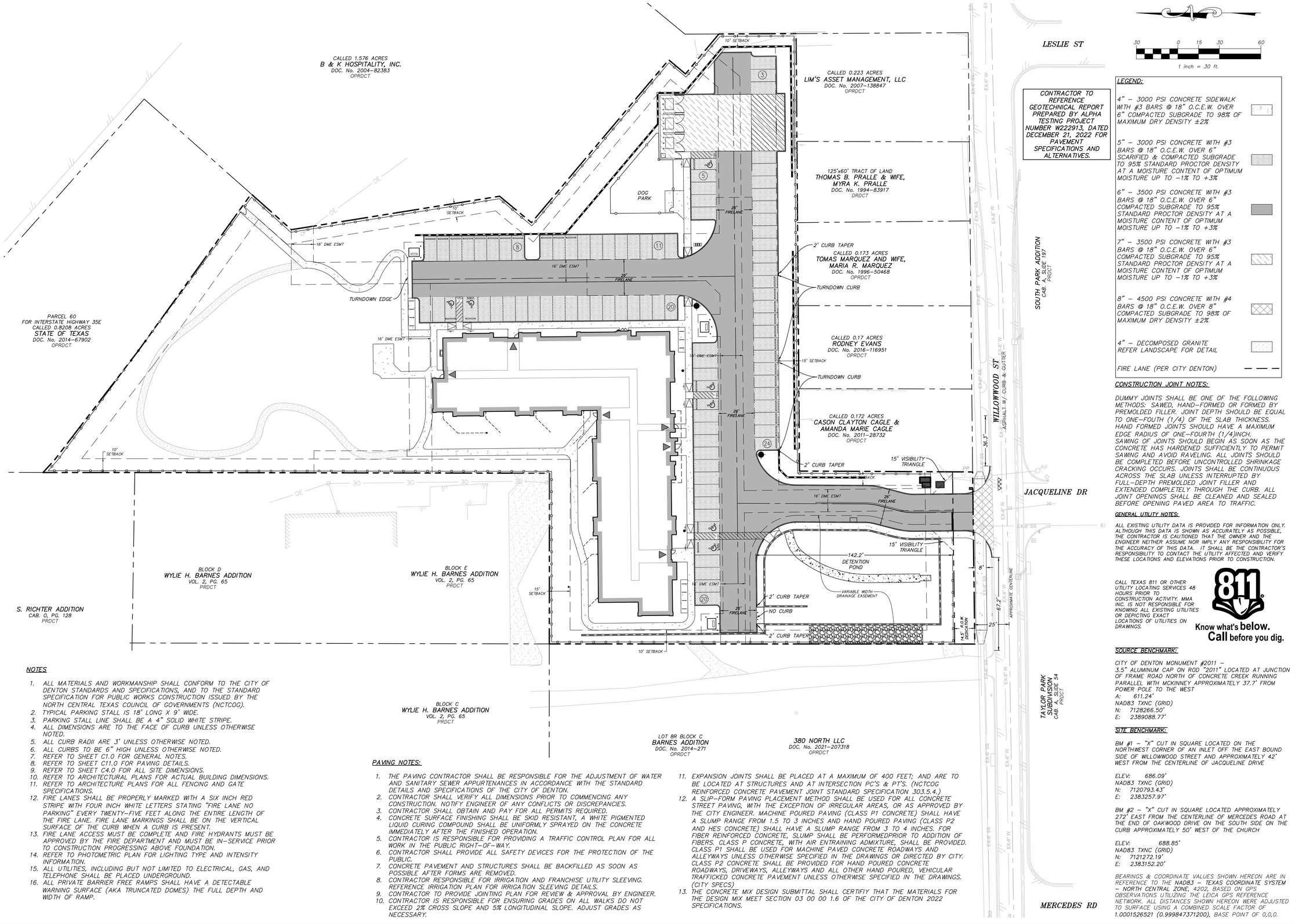

CONTRACTOR TO REFERENCE GEOTECHNICAL REPORT PREPARED BY ALPHA TESTING PROJECT NUMBER W222913, DATED DECEMBER 21, 2022 FOR PAVEMENT SPECIFICATIONS AND ALTERNATIVES.

LEGEND:

- 4" – 3000 PSI CONCRETE SIDEWALK WITH #3 BARS @ 18" O.C.E.W. OVER 6" COMPACTED SUBGRADE TO 98% OF MAXIMUM DRY DENSITY ±2%
- 5" – 3000 PSI CONCRETE WITH #3 BARS @ 18" O.C.E.W. OVER 6" SCARIFIED & COMPACTED SUBGRADE TO 95% STANDARD PROCTOR DENSITY AT A MOISTURE CONTENT OF OPTIMUM MOISTURE UP TO −1% TO +3%
- 6" – 3500 PSI CONCRETE WITH #3 BARS @ 18" O.C.E.W. OVER 6" COMPACTED SUBGRADE TO 95% STANDARD PROCTOR DENSITY AT A MOISTURE CONTENT OF OPTIMUM MOISTURE UP TO −1% TO +3%
- 7" – 3500 PSI CONCRETE WITH #3 BARS @ 18" O.C.E.W. OVER 6" COMPACTED SUBGRADE TO 95% STANDARD PROCTOR DENSITY AT A MOISTURE CONTENT OF OPTIMUM MOISTURE UP TO −1% TO +3%
- 8" – 4500 PSI CONCRETE WITH #4 BARS @ 18" O.C.E.W. OVER 8" COMPACTED SUBGRADE TO 98% OF MAXIMUM DRY DENSITY ±2%
- 4" – DECOMPOSED GRANITE REFER LANDSCAPE FOR DETAIL
- FIRE LANE (PER CITY DENTON)

CONSTRUCTION JOINT NOTES:

DUMMY JOINTS SHALL BE ONE OF THE FOLLOWING METHODS: SAWED, HAND-FORMED OR FORMED BY PREMOLDED FILLER. JOINT DEPTH SHOULD BE EQUAL TO ONE-FOUTH (1/4) OF THE SLAB THICKNESS. HAND FORMED JOINTS SHOULD HAVE A MAXIMUM EDGE RADIUS OF ONE-FOURTH (1/4)INCH. SAWING OF JOINTS SHOULD BEGIN AS SOON AS THE CONCRETE HAS HARDENED SUFFICIENTLY TO PERMIT SAWING AND AVOID RAVELING. ALL JOINTS SHOULD BE COMPLETED BEFORE UNCONTROLLED SHRINKAGE CRACKING OCCURS. JOINTS SHALL BE CONTINUOUS ACROSS THE SLAB UNLESS INTERRUPTED BY FULL-DEPTH PREMOLDED JOINT FILLER AND EXTENDED COMPLETELY THROUGH THE CURB. ALL JOINT OPENINGS SHALL BE CLEANED AND SEALED BEFORE OPENING PAVED AREA TO TRAFFIC.

GENERAL UTILITY NOTES:

ALL EXISTING UTILITY DATA IS PROVIDED FOR INFORMATION ONLY. ALTHOUGH THIS DATA IS SHOWN AS ACCURATELY AS POSSIBLE, THE CONTRACTOR IS CAUTIONED THAT THE OWNER AND THE ENGINEER NEITHER ASSUME NOR IMPLY ANY RESPONSIBILITY FOR THE ACCURACY OF THIS DATA. IT SHALL BE THE CONTRACTOR'S RESPONSIBILITY TO CONTACT THE UTILITY AFFECTED AND VERIFY THESE LOCATIONS AND ELEVATIONS PRIOR TO CONSTRUCTION.

CALL TEXAS 811 OR OTHER UTILITY LOCATING SERVICES 48 HOURS PRIOR TO CONSTRUCTION ACTIVITY. MMA INC. IS NOT RESPONSIBLE FOR KNOWING ALL EXISTING UTILITIES OR DEPICTING EXACT LOCATIONS OF UTILITIES ON DRAWINGS.

811 Know what's below. Call before you dig.

SOURCE BENCHMARK:

CITY OF DENTON MONUMENT #2011 – 3.5" ALUMINUM CAP ON ROD "2011" LOCATED AT JUNCTION OF FRAME ROAD NORTH OF CONCRETE CREEK RUNNING PARALLEL WITH MCKINNEY APPROXIMATELY 37.7' FROM POWER POLE TO THE WEST
A: 611.24'
NAD83 TXNC (GRID)
N: 7128266.50'
E: 2389088.77'

SITE BENCHMARK:

BM #1 – "X" CUT IN SQUARE LOCATED ON THE NORTHWEST CORNER OF AN INLET OFF THE EAST BOUND SIDE OF WILLOWWOOD STREET AND APPROXIMATELY 42' WEST FROM THE CENTERLINE OF JACQUELINE DRIVE

ELEV: 686.09'
NAD83 TXNC (GRID)
N: 7120793.43'
E: 2383257.97'

BM #2 – "X" CUT IN SQUARE LOCATED APPROXIMATELY 272' EAST FROM THE CENTERLINE OF MERCEDES ROAD AT THE END OF OAKWOOD DRIVE ON THE SOUTH SIDE ON THE CURB APPROXIMATELY 50' WEST OF THE CHURCH

ELEV: 688.85'
NAD83 TXNC (GRID)
N: 7121272.19'
E: 2383152.20'

BEARINGS & COORDINATE VALUES SHOWN HEREON ARE IN REFERENCE TO THE NAD83 – TEXAS COORDINATE SYSTEM – NORTH CENTRAL ZONE, 4202, BASED ON GPS OBSERVATIONS UTILIZING THE LEICA GPS REFERENCE NETWORK. ALL DISTANCES SHOWN HEREON WERE ADJUSTED TO SURFACE USING A COMBINED SCALE FACTOR OF 1.0001526521 (0.999847371200), BASE POINT OF 0,0,0.

NOTES

1. ALL MATERIALS AND WORKMANSHIP SHALL CONFORM TO THE CITY OF DENTON STANDARDS AND SPECIFICATIONS, AND TO THE STANDARD SPECIFICATION FOR PUBLIC WORKS CONSTRUCTION ISSUED BY THE NORTH CENTRAL TEXAS COUNCIL OF GOVERNMENTS (NCTCOG).
2. TYPICAL PARKING STALL IS 18' LONG X 9' WIDE.
3. PARKING STALL LINE SHALL BE A 4" SOLID WHITE STRIPE.
4. ALL DIMENSIONS ARE TO THE FACE OF CURB UNLESS OTHERWISE NOTED.
5. ALL CURB RADII ARE 3' UNLESS OTHERWISE NOTED.
6. ALL CURBS TO BE 6" HIGH UNLESS OTHERWISE NOTED.
7. REFER TO SHEET C1.0 FOR GENERAL NOTES.
8. REFER TO SHEET C11.0 FOR PAVING DETAILS.
9. REFER TO SHEET C4.0 FOR ALL SITE DIMENSIONS.
10. REFER TO ARCHITECTURAL PLANS FOR ACTUAL BUILDING DIMENSIONS.
11. REFER TO ARCHITECTURE PLANS FOR ALL FENCING AND GATE SPECIFICATIONS.
12. FIRE LANES SHALL BE PROPERLY MARKED WITH A SIX INCH RED STRIPE WITH FOUR INCH WHITE LETTERS STATING "FIRE LANE NO PARKING" EVERY TWENTY-FIVE FEET ALONG THE ENTIRE LENGTH OF THE FIRE LANE. FIRE LANE MARKINGS SHALL BE ON THE VERTICAL SURFACE OF THE CURB WHEN A CURB IS PRESENT.
13. FIRE LANE ACCESS MUST BE COMPLETE AND FIRE HYDRANTS MUST BE APPROVED BY THE FIRE DEPARTMENT AND MUST BE IN-SERVICE PRIOR TO CONSTRUCTION PROGRESSING ABOVE FOUNDATION.
14. REFER TO PHOTOMETRIC PLAN FOR LIGHTING TYPE AND INTENSITY INFORMATION.
15. ALL UTILITIES, INCLUDING BUT NOT LIMITED TO ELECTRICAL, GAS, AND TELEPHONE SHALL BE PLACED UNDERGROUND.
16. ALL PRIVATE BARRIER FREE RAMPS SHALL HAVE A DETECTABLE WARNING SURFACE (AKA TRUNCATED DOMES) THE FULL DEPTH AND WIDTH OF RAMP.

PAVING NOTES:

1. THE PAVING CONTRACTOR SHALL BE RESPONSIBLE FOR THE ADJUSTMENT OF WATER AND SANITARY SEWER APPURTENANCES IN ACCORDANCE WITH THE STANDARD DETAILS AND SPECIFICATIONS OF THE CITY OF DENTON.
2. CONTRACTOR SHALL VERIFY ALL DIMENSIONS PRIOR TO COMMENCING ANY CONSTRUCTION. NOTIFY ENGINEER OF ANY CONFLICTS OR DISCREPANCIES.
3. CONTRACTOR SHALL OBTAIN AND PAY FOR ALL PERMITS REQUIRED.
4. CONCRETE SURFACE FINISHING SHALL BE SKID RESISTANT, A WHITE PIGMENTED LIQUID CURING COMPOUND SHALL BE UNIFORMLY SPRAYED ON THE CONCRETE IMMEDIATELY AFTER THE FINISHED OPERATION.
5. CONTRACTOR IS RESPONSIBLE FOR PROVIDING A TRAFFIC CONTROL PLAN FOR ALL WORK IN THE PUBLIC RIGHT-OF-WAY.
6. CONTRACTOR SHALL PROVIDE ALL SAFETY DEVICES FOR THE PROTECTION OF THE PUBLIC.
7. CONCRETE PAVEMENT AND STRUCTURES SHALL BE BACKFILLED AS SOON AS POSSIBLE AFTER FORMS ARE REMOVED.
8. CONTRACTOR RESPONSIBLE FOR IRRIGATION AND FRANCHISE UTILITY SLEEVING. REFERENCE IRRIGATION PLAN FOR IRRIGATION SLEEVING DETAILS.
9. CONTRACTOR TO PROVIDE JOINTING PLAN FOR REVIEW & APPROVAL BY ENGINEER.
10. CONTRACTOR IS RESPONSIBLE FOR ENSURING GRADES ON ALL WALKS DO NOT EXCEED 2% CROSS SLOPE AND 5% LONGITUDINAL SLOPE. ADJUST GRADES AS NECESSARY.
11. EXPANSION JOINTS SHALL BE PLACED AT A MAXIMUM OF 400 FEET; AND ARE TO BE LOCATED AT STRUCTURES AND AT INTERSECTION PC'S & PT'S. (NCTCOG REINFORCED CONCRETE PAVEMENT JOINT STANDARD SPECIFICATION 303.5.4.)
12. A SLIP-FORM PAVING PLACEMENT METHOD SHALL BE USED FOR ALL CONCRETE STREET PAVING, WITH THE EXCEPTION OF IRREGULAR AREAS, OR AS APPROVED BY THE CITY ENGINEER. MACHINE POURED PAVING (CLASS P1 CONCRETE) SHALL HAVE A SLUMP RANGE FROM 1.5 TO 3 INCHES AND HAND POURED PAVING (CLASS P2 AND HES CONCRETE) SHALL HAVE A SLUMP RANGE FROM 3 TO 4 INCHES. FOR FIBER REINFORCED CONCRETE, SLUMP SHALL BE PERFORMEDPRIOR TO ADDITION OF FIBERS. CLASS P CONCRETE, WITH AIR ENTRAINING ADMIXTURE, SHALL BE PROVIDED. CLASS P1 SHALL BE USED FOR MACHINE PAVED CONCRETE ROADWAYS AND ALLEYWAYS UNLESS OTHERWISE SPECIFIED IN THE DRAWINGS OR DIRECTED BY CITY. CLASS P2 CONCRETE SHALL BE PROVIDED FOR HAND POURED CONCRETE ROADWAYS, DRIVEWAYS, ALLEYWAYS AND ALL OTHER HAND POURED, VEHICULAR TRAFFICKED CONCRETE PAVEMENT UNLESS OTHERWISE SPECIFIED IN THE DRAWINGS. (CITY SPECS)
13. THE CONCRETE MIX DESIGN SUBMITTAL SHALL CERTIFIY THAT THE MATERIALS FOR THE DESIGN MIX MEET SECTION 03 00 00 1.6 OF THE CITY OF DENTON 2022 SPECIFICATIONS.

THE RESERVES AT MAGNOLIA
DENTON, TEXAS

PAVING PLAN

mma
civil engineering surveying landscape architecture planning
tbpels registration number: f – 2759
tbpels registration/license number: 10088000
519 east border
arlington, texas 76010
817-469-1671
fax: 817-274-8757
www.mmatexas.com

5/16/2023
STATE OF TEXAS
ROBERT J. CRONIN JR.
122288
LICENSED PROFESSIONAL ENGINEER

PROJECT NUMBER:	3597-00-02
PROJECT MANAGER:	R. CRONIN
DRAWN BY:	G. SANCHEZ
CHECKED BY:	A. TAYLOR
ISSUE DATE:	5/16/2023

REV.	DATE	DESCRIP.	BY

SHEET CONTENT:
PAVING PLAN

SHEET NO:
C5.0

COPYRIGHT © 2023 MMA, INC.

PLOTTED BY: ISIS HERNANDEZ DATE: 5/16/2023 11:32 AM PATH: P:\3597-00-02\700 Land Development\703 Construction Documents\Design\Plot Sheets\PAVING PLAN.dwg

OVERALL GRADING PLAN

THE RESERVES AT MAGNOLIA
DENTON, TEXAS

Stall Ty
90 Degree
Total Spa

SECOND SECTION
SOUTH PARK
CAB. J, SLIDE 36
PRDCT

LESLIE ST

CALLED 1.576 ACRES
B & K HOSPITALITY, INC.
DOC. No. 2004-82383
OPRDCT

CALLED 0.223 ACRES
LIM'S ASSET MANAGEMENT, LLC
DOC. No. 2007-138847
OPRDCT

CALLED 0.173 ACRES
TOMAS MARQUEZ AND WIFE,
MARIA R. MARQUEZ
DOC. No. 1996-50468
OPRDCT

CALLED 0.17 ACRES
RODNEY EVANS
DOC. No. 2016-116951
OPRDCT

CALLED 0.172 ACRES
CASON CLAYTON CAGLE &
AMANDA MARIE CAGLE
DOC. No. 2011-28732
OPRDCT

SOUTH PARK ADDITION
CAB. A, SLIDE 197
PRDCT

WILLOWWOOD ST
ASPHALT W/ CURB & GUTTER

JACQUELINE DR

MERCEDES RD

PARCEL 60
FOR INTERSTATE HIGHWAY 35E
CALLED 0.8208 ACRES
STATE OF TEXAS
DOC. No. 2014-67902
OPRDCT

BLOCK D
WYLIE H. BARNES ADDITION
VOL. 2, PG. 65
PRDCT

BLOCK E
WYLIE H. BARNES ADDITION
VOL. 2, PG. 65
PRDCT

S. RICHTER ADDITION
CAB. O, PG. 128
PRDCT

BLOCK C
WYLIE H. BARNES ADDITION
VOL. 2, PG. 65
PRDCT

LOT 8R BLOCK C
BARNES ADDITION
DOC. No. 2014-271
OPRDCT

380 NORTH LLC
DOC. No. 2021-207318
OPRDCT

TAYLOR PARK
SUBDIVISION
CAB. A, SLIDE 54
PRDCT

ASPHALT PARKING LOT

ONE STORY
BRICK CHURCH BUILDING

GRAVEL ROAD

NO PARKING SIGN

GRADING LIMITS

10' SETBACK

15' SETBACK

16' DME ESMT

WOOD FENCE LINE

SHEET C6.1

SHEET C6.2

SHEET C6.3

40 0 20 40 80
1 inch = 40 ft.

LEGEND:	
EXISTING MAJOR CONTOUR	-640-
EXISTING MINOR CONTOUR	-641-
PROPOSED MINOR CONTOUR	640
PROPOSED MAJOR CONTOUR	641
FINISHED GRADE	• FG 630.00
FINISHED FLOOR ELEVATION	FF 630.0
PROPOSED TOP OF PAVEMENT	• TP 630.00
PROPOSED TOP OF CURB	• TC 630.00
PROPOSED GUTTER	• GT 630.00
PROPOSED TOP OF WALL	• TW 630.00
PROPOSED BOTTOM OF WALL	• BW 630.00
MATCH EXISTING	• NG 630.00±
PROPOSED RETAINING WALL	

GRADING NOTES

1. CLEARING AND GRUBBING SHALL CONSIST OF REMOVING ALL NATURAL AND ARTIFICIAL OBJECTIONABLE MATERIALS FROM THE PROJECT SITE.
2. ALL TREES, SHRUBS AND ALL SCRUB GROWTH SHALL BE CLEARED. ALL DEAD TREES, LOGS, STUMPS, RUBBISH OF ANY NATURE, AND OTHER SURFACE DEBRIS SHALL ALSO BE CLEARED.
3. THE CONTRACTOR WILL BE RESPONSIBLE FOR AND SHALL TAKE ALL PRECAUTIONS NECESSARY TO AVOID PROPERTY DAMAGE TO ADJACENT PROPERTIES DURING CONSTRUCTION. THE CONTRACTOR SHALL, AT ALL TIMES, KEEP THE SITE OF THE WORK AND THE ADJACENT PREMISES AS FREE FROM MATERIAL, DEBRIS AND RUBBISH AS IS PRACTICABLE AND SHALL REMOVE SAME FROM ANY PORTION OF THE SITE.
4. UNSUITABLE MATERIAL, INCLUDING ALL ROCKS MEASURING LARGER THAN 6" IN THE LARGEST DIMENSION, REFUSE AND OTHER DEBRIS SHALL BECOME THE PROPERTY OF THE CONTRACTOR AND SHALL BE REMOVED FROM THE SITE AND DISPOSED OF BY THE CONTRACTOR. CONTRACTOR SHALL, ALSO, COMPLY WITH ALL APPLICABLE LAWS GOVERNING THE SPILLING OF DEBRIS WHILE TRANSPORTING TO A DISPOSAL SITE.
5. SIX (6") INCHES OF TOP SOIL SHALL BE PLACED ON ALL LANDSCAPE AREAS AND PARKING ISLANDS.
6. POSITIVE DRAINAGE AWAY FROM BUILDING FOUNDATION MUST BE PROVIDED. CONTRACTOR TO ENSURE THERE IS NO PONDING AROUND FOUNDATION.
7. THE GRADES SHOWN ON THIS PLAN ARE TOP OF PAVEMENT UNLESS OTHERWISE NOTED.
8. SHOULD THE CONTRACTOR ENCOUNTER ANY UNUSUAL GEOLOGICAL CONDITIONS DURING CONSTRUCTION, THE CONTRACTOR IS RESPONSIBLE FOR NOTIFYING GEOTECHNICAL ENGINEER AND REQUESTING SUPPLEMENTAL RECOMMENDATIONS.
9. TESTING IS REQUIRED AND SHALL BE PERFORMED BY A LABORATORY APPROVED BY THE ENGINEER/OWNER AND PAID FOR BY THE OWNER.
10. LIMIT CONSTRUCTION ACTIVITY TO IMPROVEMENT AREAS ONLY.
11. REFERENCE LANDSCAPE PLANS FOR TREE PROTECTION METHODS.
12. CONTRACTOR IS RESPONSIBLE FOR ENSURING GRADES ON ALL WALKS DO NOT EXCEED 2% CROSS SLOPE AND 5% LONGITUDINAL SLOPE. ADJUST GRADES AS NECESSARY.
13. CONTRACTOR SHALL OBTAIN AND PAY FOR ALL PERMITS REQUIRED.

GENERAL UTILITY NOTES:

ALL EXISTING UTILITY DATA IS PROVIDED FOR INFORMATION ONLY. ALTHOUGH THIS DATA IS SHOWN AS ACCURATELY AS POSSIBLE, THE CONTRACTOR IS CAUTIONED THAT THE OWNER AND THE ENGINEER NEITHER ASSUME NOR IMPLY ANY RESPONSIBILITY FOR THE ACCURACY OF THIS DATA. IT SHALL BE THE CONTRACTOR'S RESPONSIBILITY TO CONTACT THE UTILITY AFFECTED AND VERIFY THESE LOCATIONS AND ELEVATIONS PRIOR TO CONSTRUCTION.

CALL TEXAS 811 OR OTHER UTILITY LOCATING SERVICES 48 HOURS PRIOR TO CONSTRUCTION ACTIVITY. MMA, INC. IS NOT RESPONSIBLE FOR KNOWING ALL EXISTING UTILITIES OR DEPICTING EXACT LOCATIONS OF UTILITIES ON DRAWINGS.

811 Know what's below. Call before you dig.

SOURCE BENCHMARK:

CITY OF DENTON MONUMENT #2011 – 3.5" ALUMINUM CAP ON ROD "2011" LOCATED AT JUNCTION OF FRAME ROAD NORTH OF CONCRETE CREEK RUNNING PARALLEL WITH MCKINNEY APPROXIMATELY 37.7' FROM POWER POLE TO THE WEST
A: 611.24'
NAD83 TXNC (GRID)
N: 7128266.50'
E: 2389088.77'

SITE BENCHMARK:

BM #1 – "X" CUT IN SQUARE LOCATED ON THE NORTHWEST CORNER OF AN INLET OFF THE EAST BOUND SIDE OF WILLOWWOOD STREET AND APPROXIMATELY 42' WEST FROM THE CENTERLINE OF JACQUELINE DRIVE

ELEV: 686.09'
NAD83 TXNC (GRID)
N: 7120793.43'
E: 2383257.97'

BM #2 – "X" CUT IN SQUARE LOCATED APPROXIMATELY 272' EAST FROM THE CENTERLINE OF MERCEDES ROAD AT THE END OF OAKWOOD DRIVE ON THE SOUTH SIDE ON THE CURB APPROXIMATELY 50' WEST OF THE CHURCH

ELEV: 688.85'
NAD83 TXNC (GRID)
N: 7121272.19'
E: 2383152.20'

BEARINGS & COORDINATE VALUES SHOWN HEREON ARE IN REFERENCE TO THE NAD83 – TEXAS COORDINATE SYSTEM – NORTH CENTRAL ZONE, 4202, BASED ON GPS OBSERVATIONS UTILIZING THE LEICA GPS REFERENCE NETWORK. ALL DISTANCES SHOWN HEREON WERE ADJUSTED TO SURFACE USING A COMBINED SCALE FACTOR OF 1.0001526521 (0.999847371200). BASE POINT OF 0,0,0.

mma
civil engineering surveying landscape architecture planning
tbpels registration number: f – 2759
tbpels registration/license number: 10088000
519 east border
arlington, texas 76010
817-469-1671
fax: 817-274-8757
www.mmatexas.com

5/16/2023
STATE OF TEXAS
ROBERT J. CRONIN JR.
122288
LICENSED
PROFESSIONAL ENGINEER

PROJECT NUMBER:	3597-00-02
PROJECT MANAGER:	R. CRONIN
DRAWN BY:	G. SANCHEZ
CHECKED BY:	A. TAYLOR
ISSUE DATE:	5/16/2023

REV.	DATE	DESCRIP.	BY

SHEET CONTENT:
OVERALL GRADING PLAN

SHEET NO:
C6.0

COPYRIGHT © 2023 MMA, INC.

PLOTTED BY: ISIS HERNANDEZ DATE: 5/16/2023 11:32 AM PATH: P:\3597-00-02\700 Land Development\703 Construction Documents\Design\Plot Sheets\OVERALL GRADING PLAN.dwg

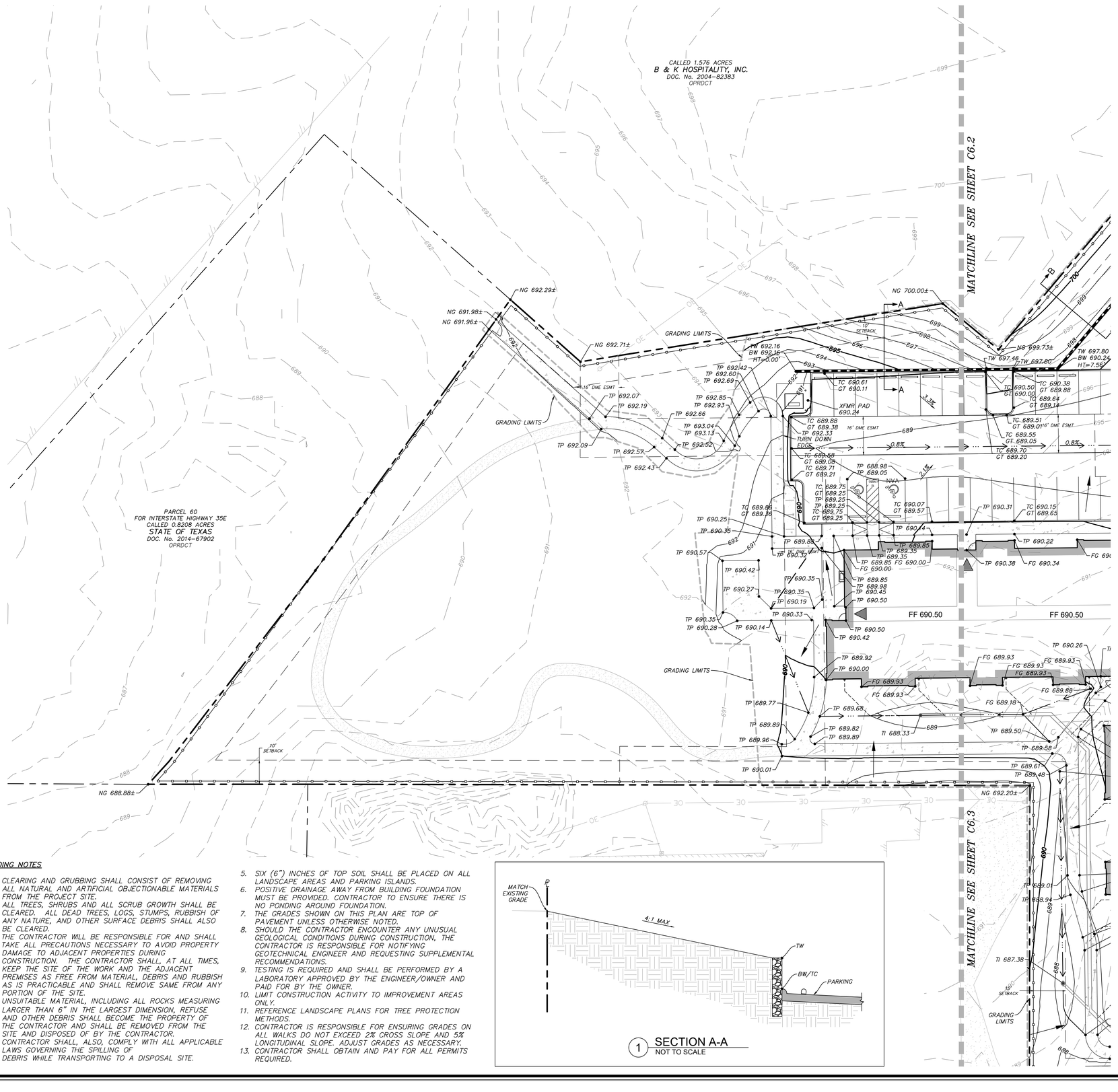

1 SECTION A-A
NOT TO SCALE

20 0 10 20 40

1 inch = 20 ft.

LEGEND:

EXISTING MAJOR CONTOUR	-640-
EXISTING MINOR CONTOUR	-641-
PROPOSED MINOR CONTOUR	640
PROPOSED MAJOR CONTOUR	641
FINISHED GRADE	• FG 630.00
FINISHED FLOOR ELEVATION	FF 630.0
PROPOSED TOP OF PAVEMENT	• TP 630.00
PROPOSED TOP OF CURB	• TC 630.00
PROPOSED GUTTER	• GT 630.00
PROPOSED TOP OF WALL	• TW 630.00
PROPOSED BOTTOM OF WALL	• BW 630.00
PROPOSED TOP INLET	• TI 630.00
MATCH EXISTING	• NG 630.00±
PROPOSED RETAINING WALL	

GRADING NOTES

1. CLEARING AND GRUBBING SHALL CONSIST OF REMOVING ALL NATURAL AND ARTIFICIAL OBJECTIONABLE MATERIALS FROM THE PROJECT SITE.
2. ALL TREES, SHRUBS AND ALL SCRUB GROWTH SHALL BE CLEARED. ALL DEAD TREES, LOGS, STUMPS, RUBBISH OF ANY NATURE, AND OTHER SURFACE DEBRIS SHALL ALSO BE CLEARED.
3. THE CONTRACTOR WILL BE RESPONSIBLE FOR AND SHALL TAKE ALL PRECAUTIONS NECESSARY TO AVOID PROPERTY DAMAGE TO ADJACENT PROPERTIES DURING CONSTRUCTION. THE CONTRACTOR SHALL, AT ALL TIMES, KEEP THE SITE OF THE WORK AND THE ADJACENT PREMISES AS FREE FROM MATERIAL, DEBRIS AND RUBBISH AS IS PRACTICABLE AND SHALL REMOVE SAME FROM ANY PORTION OF THE SITE.
4. UNSUITABLE MATERIAL, INCLUDING ALL ROCKS MEASURING LARGER THAN 6" IN THE LARGEST DIMENSION, REFUSE AND OTHER DEBRIS SHALL BECOME THE PROPERTY OF THE CONTRACTOR AND SHALL BE REMOVED FROM THE SITE AND DISPOSED OF BY THE CONTRACTOR. CONTRACTOR SHALL, ALSO, COMPLY WITH ALL APPLICABLE LAWS GOVERNING THE SPILLING OF DEBRIS WHILE TRANSPORTING TO A DISPOSAL SITE.
5. SIX (6") INCHES OF TOP SOIL SHALL BE PLACED ON ALL LANDSCAPE AREAS AND PARKING ISLANDS.
6. POSITIVE DRAINAGE AWAY FROM BUILDING FOUNDATION MUST BE PROVIDED. CONTRACTOR TO ENSURE THERE IS NO PONDING AROUND FOUNDATION.
7. THE GRADES SHOWN ON THIS PLAN ARE TOP OF PAVEMENT UNLESS OTHERWISE NOTED.
8. SHOULD THE CONTRACTOR ENCOUNTER ANY UNUSUAL GEOLOGICAL CONDITIONS DURING CONSTRUCTION, THE CONTRACTOR IS RESPONSIBLE FOR NOTIFYING GEOTECHNICAL ENGINEER AND REQUESTING SUPPLEMENTAL RECOMMENDATIONS.
9. TESTING IS REQUIRED AND SHALL BE PERFORMED BY A LABORATORY APPROVED BY THE ENGINEER/OWNER AND PAID FOR BY THE OWNER.
10. LIMIT CONSTRUCTION ACTIVITY TO IMPROVEMENT AREAS ONLY.
11. REFERENCE LANDSCAPE PLANS FOR TREE PROTECTION METHODS.
12. CONTRACTOR IS RESPONSIBLE FOR ENSURING GRADES ON ALL WALKS DO NOT EXCEED 2% CROSS SLOPE AND 5% LONGITUDINAL SLOPE. ADJUST GRADES AS NECESSARY.
13. CONTRACTOR SHALL OBTAIN AND PAY FOR ALL PERMITS REQUIRED.

GENERAL UTILITY NOTES:

ALL EXISTING UTILITY DATA IS PROVIDED FOR INFORMATION ONLY. ALTHOUGH THIS DATA IS SHOWN AS ACCURATELY AS POSSIBLE, THE CONTRACTOR IS CAUTIONED THAT THE OWNER AND THE ENGINEER NEITHER ASSUME NOR IMPLY ANY RESPONSIBILITY FOR THE ACCURACY OF THIS DATA. IT SHALL BE THE CONTRACTOR'S RESPONSIBILITY TO CONTACT THE UTILITY AFFECTED AND VERIFY THESE LOCATIONS AND ELEVATIONS PRIOR TO CONSTRUCTION.

CALL TEXAS 811 OR OTHER UTILITY LOCATING SERVICES 48 HOURS PRIOR TO CONSTRUCTION ACTIVITY. MMA INC. IS NOT RESPONSIBLE FOR KNOWING ALL EXISTING UTILITIES OR DEPICTING EXACT LOCATIONS OF UTILITIES ON DRAWINGS.

811 Know what's below. Call before you dig.

SOURCE BENCHMARK:

CITY OF DENTON MONUMENT #2011 – 3.5" ALUMINUM CAP ON ROD "2011" LOCATED AT JUNCTION OF FRAME ROAD NORTH OF CONCRETE CREEK RUNNING PARALLEL WITH MCKINNEY APPROXIMATELY 37.7' FROM POWER POLE TO THE WEST
A: 611.24'
NAD83 TXNC (GRID)
N: 7128266.50'
E: 2389088.77'

SITE BENCHMARK:

BM #1 – "X" CUT IN SQUARE LOCATED ON THE NORTHWEST CORNER OF AN INLET OFF THE EAST BOUND SIDE OF WILLOWWOOD STREET AND APPROXIMATELY 42' WEST FROM THE CENTERLINE OF JACQUELINE DRIVE

ELEV: 686.09'
NAD83 TXNC (GRID)
N: 7120793.43'
E: 2383257.97'

BM #2 – "X" CUT IN SQUARE LOCATED APPROXIMATELY 272' EAST FROM THE CENTERLINE OF MERCEDES ROAD AT THE END OF OAKWOOD DRIVE ON THE SOUTH SIDE ON THE CURB APPROXIMATELY 50' WEST OF THE CHURCH

ELEV: 688.85'
NAD83 TXNC (GRID)
N: 7121272.19'
E: 2383152.20'

BEARINGS & COORDINATE VALUES SHOWN HEREON ARE IN REFERENCE TO THE NAD83 – TEXAS COORDINATE SYSTEM – NORTH CENTRAL ZONE, 4202, BASED ON GPS OBSERVATIONS UTILIZING THE LEICA GPS REFERENCE NETWORK. ALL DISTANCES SHOWN HEREON WERE ADJUSTED TO SURFACE USING A COMBINED SCALE FACTOR OF 1.0001526521 (0.999847371200), BASE POINT OF 0,0,0.

THE RESERVES AT MAGNOLIA
DENTON, TEXAS

GRADING PLAN

mma
civil engineering surveying landscape architecture planning
tbpels registration number: f – 2759
tbpels registration/license number: 10088000
519 east border
arlington, texas 76010
817-469-1671
fax: 817-274-8757
www.mmatexas.com

5/16/2023
STATE OF TEXAS
ROBERT J. CRONIN JR.
122288
LICENSED
PROFESSIONAL ENGINEER

PROJECT NUMBER:	3597-00-02
PROJECT MANAGER:	R. CRONIN
DRAWN BY:	G. SANCHEZ
CHECKED BY:	A. TAYLOR
ISSUE DATE:	5/16/2023

REV.	DATE	DESCRIP.	BY

SHEET CONTENT:
GRADING PLAN

SHEET NO:
C6.1

COPYRIGHT © 2023 MMA, INC.

PLOTTED BY: ISIS HERNANDEZ DATE: 5/16/2023 11:31 AM PATH: P:\3597-00-02\700 Land Development\700 Construction Documents\Design\Plot Sheets\GRADING PLAN.dwg

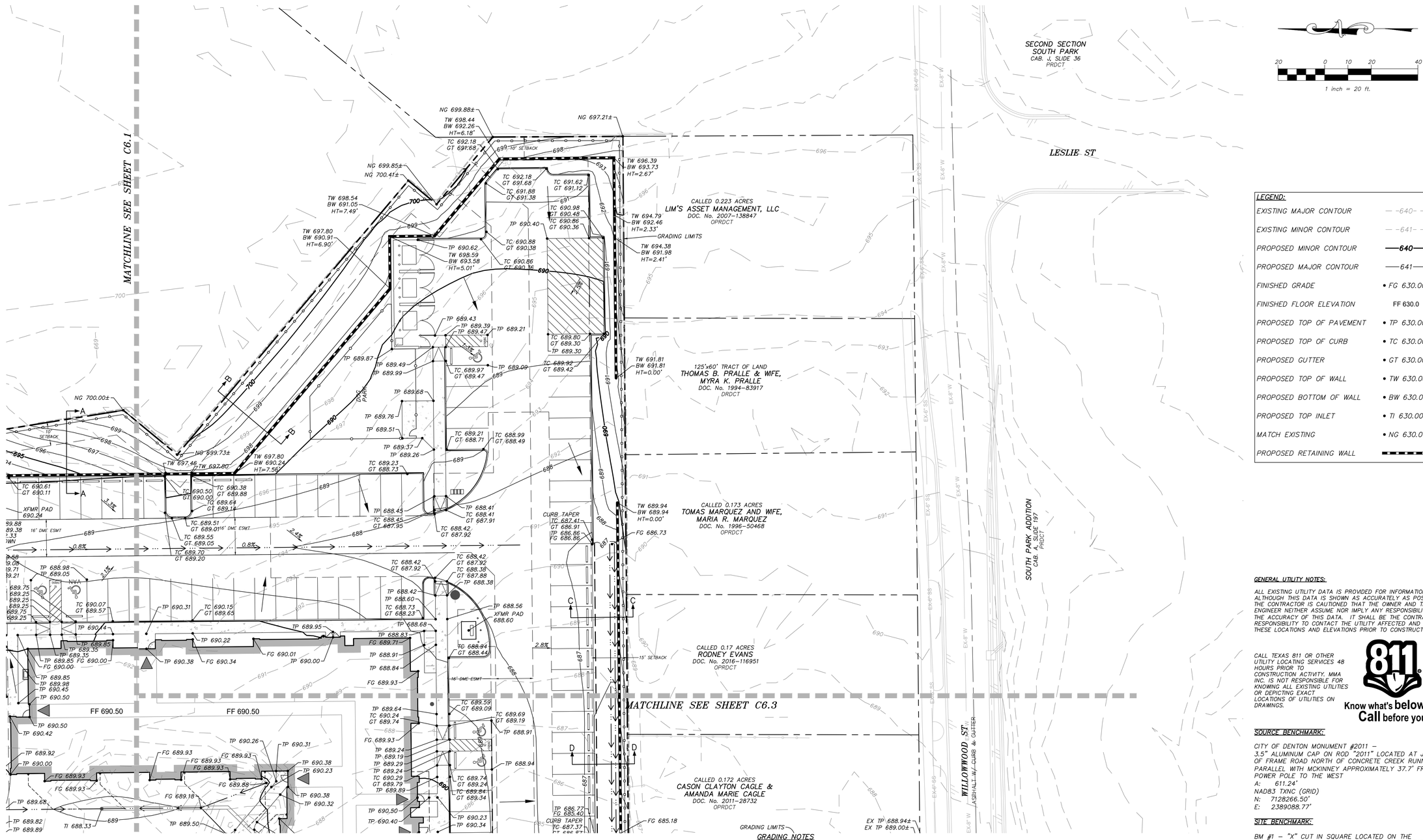

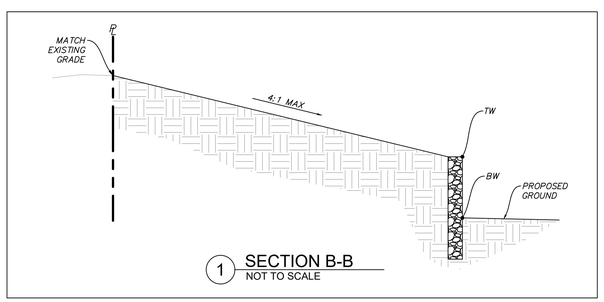

1 SECTION B-B
NOT TO SCALE

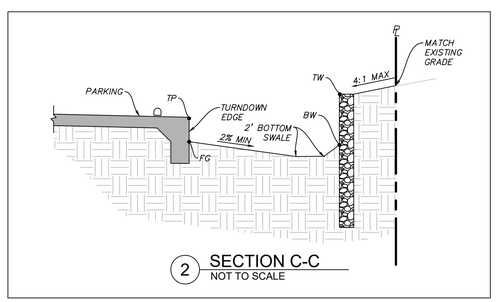

2 SECTION C-C
NOT TO SCALE

GRADING NOTES

1. CLEARING AND GRUBBING SHALL CONSIST OF REMOVING ALL NATURAL AND ARTIFICIAL OBJECTIONABLE MATERIALS FROM THE PROJECT SITE.
2. ALL TREES, SHRUBS AND ALL SCRUB GROWTH SHALL BE CLEARED. ALL DEAD TREES, LOGS, STUMPS, RUBBISH OF ANY NATURE, AND OTHER SURFACE DEBRIS SHALL ALSO BE CLEARED.
3. THE CONTRACTOR WILL BE RESPONSIBLE FOR AND SHALL TAKE ALL PRECAUTIONS NECESSARY TO AVOID PROPERTY DAMAGE TO ADJACENT PROPERTIES DURING CONSTRUCTION. THE CONTRACTOR SHALL, AT ALL TIMES, KEEP THE SITE OF THE WORK AND THE ADJACENT PREMISES AS FREE FROM MATERIAL, DEBRIS AND RUBBISH AS IS PRACTICABLE AND SHALL REMOVE SAME FROM ANY PORTION OF THE SITE.
4. UNSUITABLE MATERIAL, INCLUDING ALL ROCKS MEASURING LARGER THAN 6" IN THE LARGEST DIMENSION, REFUSE AND OTHER DEBRIS SHALL BECOME THE PROPERTY OF THE CONTRACTOR AND SHALL BE REMOVED FROM THE SITE AND DISPOSED OF BY THE CONTRACTOR. CONTRACTOR SHALL, ALSO, COMPLY WITH ALL APPLICABLE LAWS GOVERNING THE SPILLING OF DEBRIS WHILE TRANSPORTING TO A DISPOSAL SITE.
5. SIX (6") INCHES OF TOP SOIL SHALL BE PLACED ON ALL LANDSCAPE AREAS AND PARKING ISLANDS.
6. POSITIVE DRAINAGE AWAY FROM BUILDING FOUNDATION MUST BE PROVIDED. CONTRACTOR TO ENSURE THERE IS NO PONDING AROUND FOUNDATION.
7. THE GRADES SHOWN ON THIS PLAN ARE TOP OF PAVEMENT UNLESS OTHERWISE NOTED.
8. SHOULD THE CONTRACTOR ENCOUNTER ANY UNUSUAL GEOLOGICAL CONDITIONS DURING CONSTRUCTION, THE CONTRACTOR IS RESPONSIBLE FOR NOTIFYING GEOTECHNICAL ENGINEER AND REQUESTING SUPPLEMENTAL RECOMMENDATIONS.
9. TESTING IS REQUIRED AND SHALL BE PERFORMED BY A LABORATORY APPROVED BY THE ENGINEER/OWNER AND PAID FOR BY THE OWNER.
10. LIMIT CONSTRUCTION ACTIVITY TO IMPROVEMENT AREAS ONLY.
11. REFERENCE LANDSCAPE PLANS FOR TREE PROTECTION METHODS.
12. CONTRACTOR IS RESPONSIBLE FOR ENSURING GRADES ON ALL WALKS DO NOT EXCEED 2% CROSS SLOPE AND 5% LONGITUDINAL SLOPE. ADJUST GRADES AS NECESSARY.
13. CONTRACTOR SHALL OBTAIN AND PAY FOR ALL PERMITS REQUIRED.

LEGEND:	
EXISTING MAJOR CONTOUR	--640--
EXISTING MINOR CONTOUR	--641--
PROPOSED MINOR CONTOUR	640
PROPOSED MAJOR CONTOUR	641
FINISHED GRADE	• FG 630.00
FINISHED FLOOR ELEVATION	FF 630.0
PROPOSED TOP OF PAVEMENT	• TP 630.00
PROPOSED TOP OF CURB	• TC 630.00
PROPOSED GUTTER	• GT 630.00
PROPOSED TOP OF WALL	• TW 630.00
PROPOSED BOTTOM OF WALL	• BW 630.00
PROPOSED TOP INLET	• TI 630.00
MATCH EXISTING	• NG 630.00±
PROPOSED RETAINING WALL	

GENERAL UTILITY NOTES:

ALL EXISTING UTILITY DATA IS PROVIDED FOR INFORMATION ONLY. ALTHOUGH THIS DATA IS SHOWN AS ACCURATELY AS POSSIBLE, THE CONTRACTOR IS CAUTIONED THAT THE OWNER AND THE ENGINEER NEITHER ASSUME NOR IMPLY ANY RESPONSIBILITY FOR THE ACCURACY OF THIS DATA. IT SHALL BE THE CONTRACTOR'S RESPONSIBILITY TO CONTACT THE UTILITY AFFECTED AND VERIFY THESE LOCATIONS AND ELEVATIONS PRIOR TO CONSTRUCTION.

CALL TEXAS 811 OR OTHER UTILITY LOCATING SERVICES 48 HOURS PRIOR TO CONSTRUCTION ACTIVITY. MMA INC. IS NOT RESPONSIBLE FOR KNOWING ALL EXISTING UTILITIES OR DEPICTING EXACT LOCATIONS OF UTILITIES ON DRAWINGS.

811 Know what's below. Call before you dig.

SOURCE BENCHMARK:

CITY OF DENTON MONUMENT #2011 – 3.5" ALUMINUM CAP ON ROD "2011" LOCATED AT JUNCTION OF FRAME ROAD NORTH OF CONCRETE CREEK RUNNING PARALLEL WITH MCKINNEY APPROXIMATELY 37.7' FROM POWER POLE TO THE WEST
A: 611.24'
NAD83 TXNC (GRID)
N: 7128266.50'
E: 2389088.77'

SITE BENCHMARK:

BM #1 – "X" CUT IN SQUARE LOCATED ON THE NORTHWEST CORNER OF AN INLET OFF THE EAST BOUND SIDE OF WILLOWWOOD STREET AND APPROXIMATELY 42' WEST FROM THE CENTERLINE OF JACQUELINE DRIVE

ELEV: 686.09'
NAD83 TXNC (GRID)
N: 7120793.43'
E: 2383257.97'

BM #2 – "X" CUT IN SQUARE LOCATED APPROXIMATELY 272' EAST FROM THE CENTERLINE OF MERCEDES ROAD AT THE END OF OAKWOOD DRIVE ON THE SOUTH SIDE ON THE CURB APPROXIMATELY 50' WEST OF THE CHURCH

ELEV: 688.85'
NAD83 TXNC (GRID)
N: 7121272.19'
E: 2383152.20'

BEARINGS & COORDINATE VALUES SHOWN HEREON ARE IN REFERENCE TO THE NAD83 – TEXAS COORDINATE SYSTEM – NORTH CENTRAL ZONE, 4202, BASED ON GPS OBSERVATIONS UTILIZING THE LEICA GPS REFERENCE NETWORK. ALL DISTANCES SHOWN HEREON WERE ADJUSTED TO SURFACE USING A COMBINED SCALE FACTOR OF 1.0001526521 (0.999847371200). BASE POINT OF 0,0,0.

THE RESERVES AT MAGNOLIA
DENTON, TEXAS

GRADING PLAN

mma
civil engineering surveying landscape architecture planning
tbpels registration number: f – 2759
tbpels registration/license number: 10088000
519 east border
arlington, texas 76010
817-469-1671
fax: 817-274-8757
www.mmatexas.com

5/16/2023
STATE OF TEXAS
ROBERT J. CRONIN JR.
122288
LICENSED PROFESSIONAL ENGINEER

PROJECT NUMBER:	3597-00-02
PROJECT MANAGER:	R. CRONIN
DRAWN BY:	G. SANCHEZ
CHECKED BY:	A. TAYLOR
ISSUE DATE:	5/16/2023

REV.	DATE	DESCRIP.	BY

SHEET CONTENT:
GRADING PLAN

SHEET NO:
C6.2

COPYRIGHT © 2023 MMA, INC.

PLOTTED BY: ISIS HERNANDEZ DATE: 5/16/2023 11:33 AM PATH: P:\3597-00-02\700 Land Development\703 Construction Documents\Design\Plot Sheets\GRADING PLAN.dwg

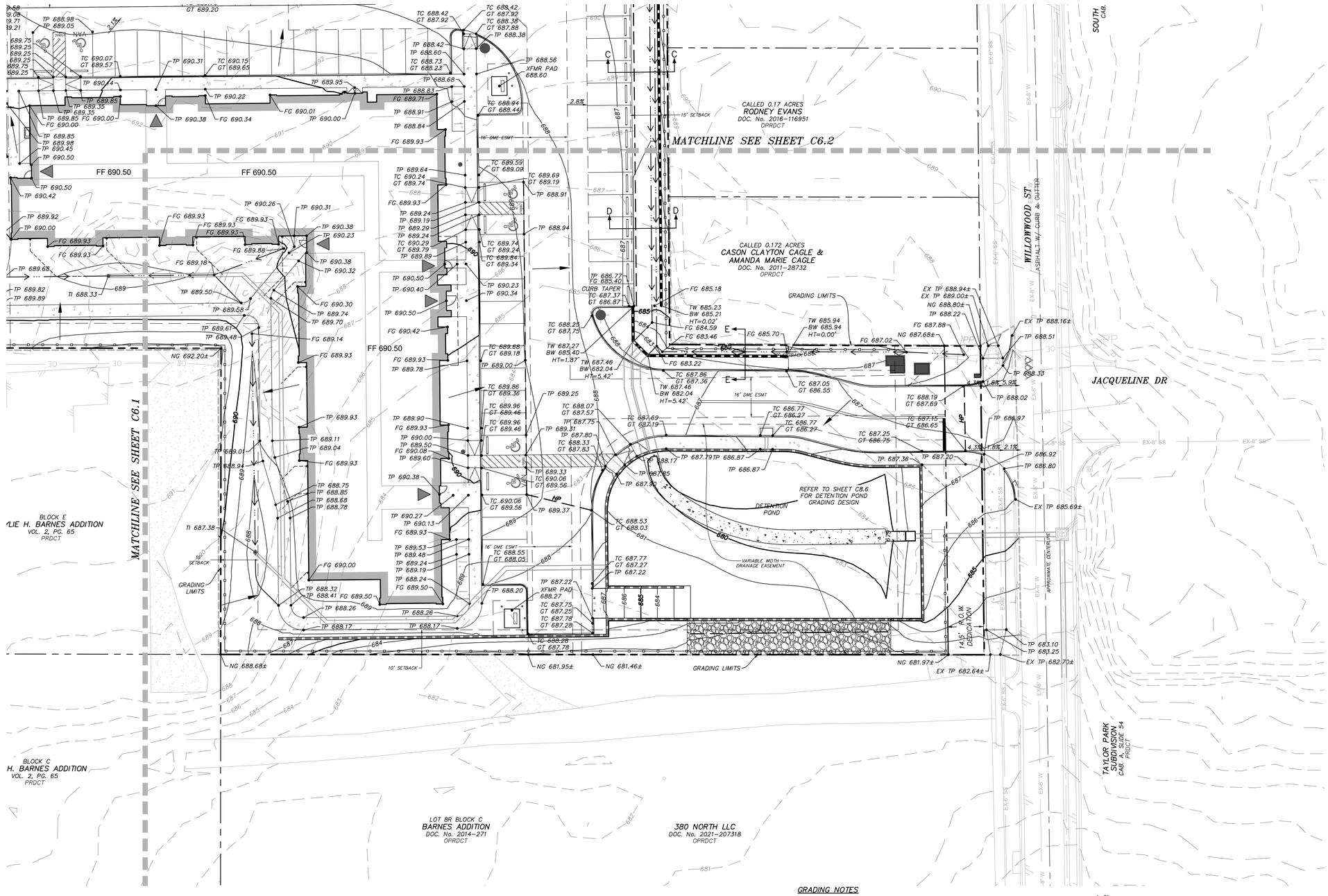

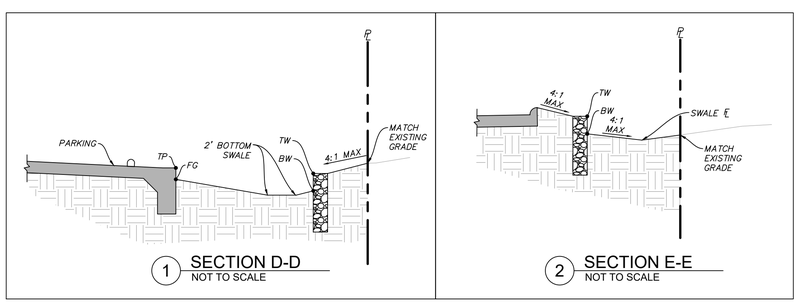

1 SECTION D-D
NOT TO SCALE

2 SECTION E-E
NOT TO SCALE

LEGEND:

EXISTING MAJOR CONTOUR	--640--
EXISTING MINOR CONTOUR	--641--
PROPOSED MINOR CONTOUR	640
PROPOSED MAJOR CONTOUR	641
FINISHED GRADE	• FG 630.00
FINISHED FLOOR ELEVATION	FF 630.0
PROPOSED TOP OF PAVEMENT	• TP 630.00
PROPOSED TOP OF CURB	• TC 630.00
PROPOSED GUTTER	• GT 630.00
PROPOSED TOP OF WALL	• TW 630.00
PROPOSED BOTTOM OF WALL	• BW 630.00
PROPOSED TOP INLET	• TI 630.00
MATCH EXISTING	• NG 630.00±
PROPOSED RETAINING WALL	

GRADING NOTES

1. CLEARING AND GRUBBING SHALL CONSIST OF REMOVING ALL NATURAL AND ARTIFICIAL OBJECTIONABLE MATERIALS FROM THE PROJECT SITE.
2. ALL TREES, SHRUBS AND ALL SCRUB GROWTH SHALL BE CLEARED. ALL DEAD TREES, LOGS, STUMPS, RUBBISH OF ANY NATURE, AND OTHER SURFACE DEBRIS SHALL ALSO BE CLEARED.
3. THE CONTRACTOR WILL BE RESPONSIBLE FOR AND SHALL TAKE ALL PRECAUTIONS NECESSARY TO AVOID PROPERTY DAMAGE TO ADJACENT PROPERTIES DURING CONSTRUCTION. THE CONTRACTOR SHALL, AT ALL TIMES, KEEP THE SITE OF THE WORK AND THE ADJACENT PREMISES AS FREE FROM MATERIAL, DEBRIS AND RUBBISH AS IS PRACTICABLE AND SHALL REMOVE SAME FROM ANY PORTION OF THE SITE.
4. UNSUITABLE MATERIAL, INCLUDING ALL ROCKS MEASURING LARGER THAN 6" IN THE LARGEST DIMENSION, REFUSE AND OTHER DEBRIS SHALL BECOME THE PROPERTY OF THE CONTRACTOR AND SHALL BE REMOVED FROM THE SITE AND DISPOSED OF BY THE CONTRACTOR. CONTRACTOR SHALL, ALSO, COMPLY WITH ALL APPLICABLE LAWS GOVERNING THE SPILLING OF DEBRIS WHILE TRANSPORTING TO A DISPOSAL SITE.
5. SIX (6") INCHES OF TOP SOIL SHALL BE PLACED ON ALL LANDSCAPE AREAS AND PARKING ISLANDS.
6. POSITIVE DRAINAGE AWAY FROM BUILDING FOUNDATION MUST BE PROVIDED. CONTRACTOR TO ENSURE THERE IS NO PONDING AROUND FOUNDATION.
7. THE GRADES SHOWN ON THIS PLAN ARE TOP OF PAVEMENT UNLESS OTHERWISE NOTED.
8. SHOULD THE CONTRACTOR ENCOUNTER ANY UNUSUAL GEOLOGICAL CONDITIONS DURING CONSTRUCTION, THE CONTRACTOR IS RESPONSIBLE FOR NOTIFYING GEOTECHNICAL ENGINEER AND REQUESTING SUPPLEMENTAL RECOMMENDATIONS.
9. TESTING IS REQUIRED AND SHALL BE PERFORMED BY A LABORATORY APPROVED BY THE ENGINEER/OWNER AND PAID FOR BY THE OWNER.
10. LIMIT CONSTRUCTION ACTIVITY TO IMPROVEMENT AREAS ONLY.
11. REFERENCE LANDSCAPE PLANS FOR TREE PROTECTION METHODS.
12. CONTRACTOR IS RESPONSIBLE FOR ENSURING GRADES ON ALL WALKS DO NOT EXCEED 2% CROSS SLOPE AND 5% LONGITUDINAL SLOPE. ADJUST GRADES AS NECESSARY.
13. CONTRACTOR SHALL OBTAIN AND PAY FOR ALL PERMITS REQUIRED.

GENERAL UTILITY NOTES:

ALL EXISTING UTILITY DATA IS PROVIDED FOR INFORMATION ONLY. ALTHOUGH THIS DATA IS SHOWN AS ACCURATELY AS POSSIBLE, THE CONTRACTOR IS CAUTIONED THAT THE OWNER AND THE ENGINEER NEITHER ASSUME NOR IMPLY ANY RESPONSIBILITY FOR THE ACCURACY OF THIS DATA. IT SHALL BE THE CONTRACTOR'S RESPONSIBILITY TO CONTACT THE UTILITY AFFECTED AND VERIFY THESE LOCATIONS AND ELEVATIONS PRIOR TO CONSTRUCTION.

CALL TEXAS 811 OR OTHER UTILITY LOCATING SERVICES 48 HOURS PRIOR TO CONSTRUCTION ACTIVITY. MMA, INC. IS NOT RESPONSIBLE FOR KNOWING ALL EXISTING UTILITIES OR DEPICTING EXACT LOCATIONS OF UTILITIES ON DRAWINGS.

811 Know what's below. Call before you dig.

SOURCE BENCHMARK:

CITY OF DENTON MONUMENT #2011 – 3.5" ALUMINUM CAP ON ROD "2011" LOCATED AT JUNCTION OF FRAME ROAD NORTH OF CONCRETE CREEK RUNNING PARALLEL WITH MCKINNEY APPROXIMATELY 37.7' FROM POWER POLE TO THE WEST
A: 611.24'
NAD83 TXNC (GRID)
N: 7128266.50'
E: 2389088.77'

SITE BENCHMARK:

BM #1 – "X" CUT IN SQUARE LOCATED ON THE NORTHWEST CORNER OF AN INLET OFF THE EAST BOUND SIDE OF WILLOWWOOD STREET AND APPROXIMATELY 42' WEST FROM THE CENTERLINE OF JACQUELINE DRIVE

ELEV: 686.09'
NAD83 TXNC (GRID)
N: 7120793.43'
E: 2383257.97'

BM #2 – "X" CUT IN SQUARE LOCATED APPROXIMATELY 272' EAST FROM THE CENTERLINE OF MERCEDES ROAD AT THE END OF OAKWOOD DRIVE ON THE SOUTH SIDE ON THE CURB APPROXIMATELY 50' WEST OF THE CHURCH

ELEV: 688.85'
NAD83 TXNC (GRID)
N: 7121272.19'
E: 2383152.20'

BEARINGS & COORDINATE VALUES SHOWN HEREON ARE IN REFERENCE TO THE NAD83 – TEXAS COORDINATE SYSTEM – NORTH CENTRAL ZONE, 4202, BASED ON GPS OBSERVATIONS UTILIZING THE LEICA GPS REFERENCE NETWORK. ALL DISTANCES SHOWN HEREON WERE ADJUSTED TO SURFACE USING A COMBINED SCALE FACTOR OF 1.0001526521 (0.999847371200), BASE POINT OF 0,0,0.

THE RESERVES AT MAGNOLIA
DENTON, TEXAS

GRADING PLAN

mma
civil engineering surveying landscape architecture planning
tbpels registration number: f – 2759
tbpels registration/license number: 10088000
519 east border
arlington, texas 76010
817-469-1671
fax: 817-274-8757
www.mmatexas.com

5/16/2023

STATE OF TEXAS
ROBERT J. CRONIN JR.
122288
LICENSED
PROFESSIONAL ENGINEER

PROJECT NUMBER:	3597-00-02
PROJECT MANAGER:	R. CRONIN
DRAWN BY:	G. SANCHEZ
CHECKED BY:	A. TAYLOR
ISSUE DATE:	5/16/2023

REV.	DATE	DESCRIP.	BY

SHEET CONTENT:

GRADING PLAN

SHEET NO:

C6.3

COPYRIGHT © 2023 MMA, INC.

PLOTTED BY: IRIS HERNANDEZ DATE: 5/16/2023 11:33 AM PATH: P:\3597-00-02\700 Land Development\703 Construction Documents\Design\Plot Sheets\GRADING PLAN.dwg

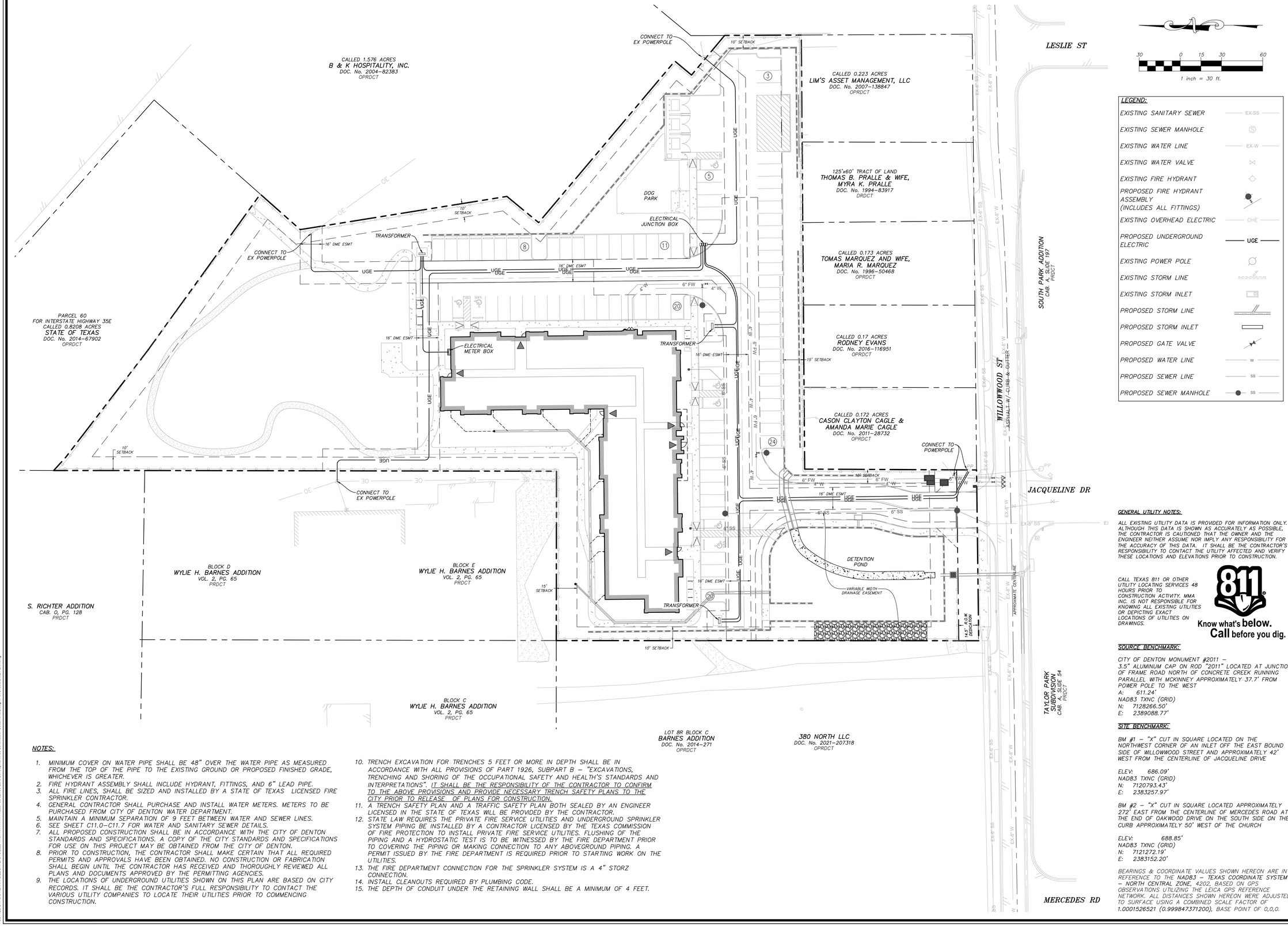

LEGEND:

- EXISTING SANITARY SEWER — EX-SS
- EXISTING SEWER MANHOLE — Ⓢ
- EXISTING WATER LINE — EX-W
- EXISTING WATER VALVE
- EXISTING FIRE HYDRANT
- PROPOSED FIRE HYDRANT ASSEMBLY (INCLUDES ALL FITTINGS)
- EXISTING OVERHEAD ELECTRIC — OHE
- PROPOSED UNDERGROUND ELECTRIC — UGE
- EXISTING POWER POLE
- EXISTING STORM LINE
- EXISTING STORM INLET
- PROPOSED STORM LINE
- PROPOSED STORM INLET
- PROPOSED GATE VALVE
- PROPOSED WATER LINE — W
- PROPOSED SEWER LINE — SS
- PROPOSED SEWER MANHOLE — SS

NOTES:

1. MINIMUM COVER ON WATER PIPE SHALL BE 48" OVER THE WATER PIPE AS MEASURED FROM THE TOP OF THE PIPE TO THE EXISTING GROUND OR PROPOSED FINISHED GRADE, WHICHEVER IS GREATER.
2. FIRE HYDRANT ASSEMBLY SHALL INCLUDE HYDRANT, FITTINGS, AND 6" LEAD PIPE.
3. ALL FIRE LINES, SHALL BE SIZED AND INSTALLED BY A STATE OF TEXAS LICENSED FIRE SPRINKLER CONTRACTOR.
4. GENERAL CONTRACTOR SHALL PURCHASE AND INSTALL WATER METERS. METERS TO BE PURCHASED FROM CITY OF DENTON WATER DEPARTMENT.
5. MAINTAIN A MINIMUM SEPARATION OF 9 FEET BETWEEN WATER AND SEWER LINES.
6. SEE SHEET C11.0–C11.7 FOR WATER AND SANITARY SEWER DETAILS.
7. ALL PROPOSED CONSTRUCTION SHALL BE IN ACCORDANCE WITH THE CITY OF DENTON STANDARDS AND SPECIFICATIONS. A COPY OF THE CITY STANDARDS AND SPECIFICATIONS FOR USE ON THIS PROJECT MAY BE OBTAINED FROM THE CITY OF DENTON.
8. PRIOR TO CONSTRUCTION, THE CONTRACTOR SHALL MAKE CERTAIN THAT ALL REQUIRED PERMITS AND APPROVALS HAVE BEEN OBTAINED. NO CONSTRUCTION OR FABRICATION SHALL BEGIN UNTIL THE CONTRACTOR HAS RECEIVED AND THOROUGHLY REVIEWED ALL PLANS AND DOCUMENTS APPROVED BY THE PERMITTING AGENCIES.
9. THE LOCATIONS OF UNDERGROUND UTILITIES SHOWN ON THIS PLAN ARE BASED ON CITY RECORDS. IT SHALL BE THE CONTRACTOR'S FULL RESPONSIBILITY TO CONTACT THE VARIOUS UTILITY COMPANIES TO LOCATE THEIR UTILITIES PRIOR TO COMMENCING CONSTRUCTION.
10. TRENCH EXCAVATION FOR TRENCHES 5 FEET OR MORE IN DEPTH SHALL BE IN ACCORDANCE WITH ALL PROVISIONS OF PART 1926, SUBPART B – "EXCAVATIONS, TRENCHING AND SHORING OF THE OCCUPATIONAL SAFETY AND HEALTH'S STANDARDS AND INTERPRETATIONS". IT SHALL BE THE RESPONSIBILITY OF THE CONTRACTOR TO CONFIRM TO THE ABOVE PROVISIONS AND PROVIDE NECESSARY TRENCH SAFETY PLANS TO THE CITY PRIOR TO RELEASE OF PLANS FOR CONSTRUCTION.
11. A TRENCH SAFETY PLAN AND A TRAFFIC SAFETY PLAN BOTH SEALED BY AN ENGINEER LICENSED IN THE STATE OF TEXAS WILL BE PROVIDED BY THE CONTRACTOR.
12. STATE LAW REQUIRES THE PRIVATE FIRE SERVICE UTILITIES AND UNDERGROUND SPRINKLER SYSTEM PIPING BE INSTALLED BY A CONTRACTOR LICENSED BY THE TEXAS COMMISSION OF FIRE PROTECTION TO INSTALL PRIVATE FIRE SERVICE UTILITIES. FLUSHING OF THE PIPING AND A HYDROSTATIC TEST IS TO BE WITNESSED BY THE FIRE DEPARTMENT PRIOR TO COVERING THE PIPING OR MAKING CONNECTION TO ANY ABOVEGROUND PIPING. A PERMIT ISSUED BY THE FIRE DEPARTMENT IS REQUIRED PRIOR TO STARTING WORK ON THE UTILITIES.
13. THE FIRE DEPARTMENT CONNECTION FOR THE SPRINKLER SYSTEM IS A 4" STORZ CONNECTION.
14. INSTALL CLEANOUTS REQUIRED BY PLUMBING CODE.
15. THE DEPTH OF CONDUIT UNDER THE RETAINING WALL SHALL BE A MINIMUM OF 4 FEET.

GENERAL UTILITY NOTES:

ALL EXISTING UTILITY DATA IS PROVIDED FOR INFORMATION ONLY. ALTHOUGH THIS DATA IS SHOWN AS ACCURATELY AS POSSIBLE, THE CONTRACTOR IS CAUTIONED THAT THE OWNER AND THE ENGINEER NEITHER ASSUME NOR IMPLY ANY RESPONSIBILITY FOR THE ACCURACY OF THIS DATA. IT SHALL BE THE CONTRACTOR'S RESPONSIBILITY TO CONTACT THE UTILITY AFFECTED AND VERIFY THESE LOCATIONS AND ELEVATIONS PRIOR TO CONSTRUCTION.

CALL TEXAS 811 OR OTHER UTILITY LOCATING SERVICES 48 HOURS PRIOR TO CONSTRUCTION ACTIVITY. MMA INC. IS NOT RESPONSIBLE FOR KNOWING ALL EXISTING UTILITIES OR DEPICTING EXACT LOCATIONS OF UTILITIES ON DRAWINGS.

811 Know what's below. Call before you dig.

SOURCE BENCHMARK:

CITY OF DENTON MONUMENT #2011 – 3.5" ALUMINUM CAP ON ROD "2011" LOCATED AT JUNCTION OF FRAME ROAD NORTH OF CONCRETE CREEK RUNNING PARALLEL WITH MCKINNEY APPROXIMATELY 37.7' FROM POWER POLE TO THE WEST
A: 611.24'
NAD83 TXNC (GRID)
N: 7128266.50'
E: 2389088.77'

SITE BENCHMARK:

BM #1 – "X" CUT IN SQUARE LOCATED ON THE NORTHWEST CORNER OF AN INLET OFF THE EAST BOUND SIDE OF WILLOWWOOD STREET AND APPROXIMATELY 42' WEST FROM THE CENTERLINE OF JACQUELINE DRIVE

ELEV: 686.09'
NAD83 TXNC (GRID)
N: 7120793.43'
E: 2383257.97'

BM #2 – "X" CUT IN SQUARE LOCATED APPROXIMATELY 272' EAST FROM THE CENTERLINE OF MERCEDES ROAD AT THE END OF OAKWOOD DRIVE ON THE SOUTH SIDE ON THE CURB APPROXIMATELY 50' WEST OF THE CHURCH

ELEV: 688.85'
NAD83 TXNC (GRID)
N: 7121272.19'
E: 2383152.20'

BEARINGS & COORDINATE VALUES SHOWN HEREON ARE IN REFERENCE TO THE NAD83 – TEXAS COORDINATE SYSTEM – NORTH CENTRAL ZONE, 4202, BASED ON GPS OBSERVATIONS UTILIZING THE LEICA GPS REFERENCE NETWORK. ALL DISTANCES SHOWN HEREON WERE ADJUSTED TO SURFACE USING A COMBINED SCALE FACTOR OF 1.0001526521 (0.999847371200), BASE POINT OF 0,0,0.

THE RESERVES AT MAGNOLIA
DENTON, TEXAS

DME PLAN

mma
civil engineering surveying landscape architecture planning
tbpels registration number: f – 2759
tbpels registration/license number: 10088000
519 east border
arlington, texas 76010
817-469-1671
fax: 817-274-8757
www.mmatexas.com

5/16/2023

STATE OF TEXAS
ROBERT J. CRONIN JR.
122288
LICENSED PROFESSIONAL ENGINEER

PROJECT NUMBER:	3597-00-02
PROJECT MANAGER:	R. CRONIN
DRAWN BY:	G. SANCHEZ
CHECKED BY:	A. TAYLOR
ISSUE DATE:	5/16/2023

REV.	DATE	DESCRIP.	BY

SHEET CONTENT:
DME PLAN

SHEET NO:
C7.0

COPYRIGHT © 2023 MMA, INC.

PLOTTED BY: ISIS HERNANDEZ DATE: 5/16/2023 11:34 AM PATH: P:\3597-00-02\700 Land Development\703 Construction Documents\Design\Plot Sheets\DME PLAN.dwg

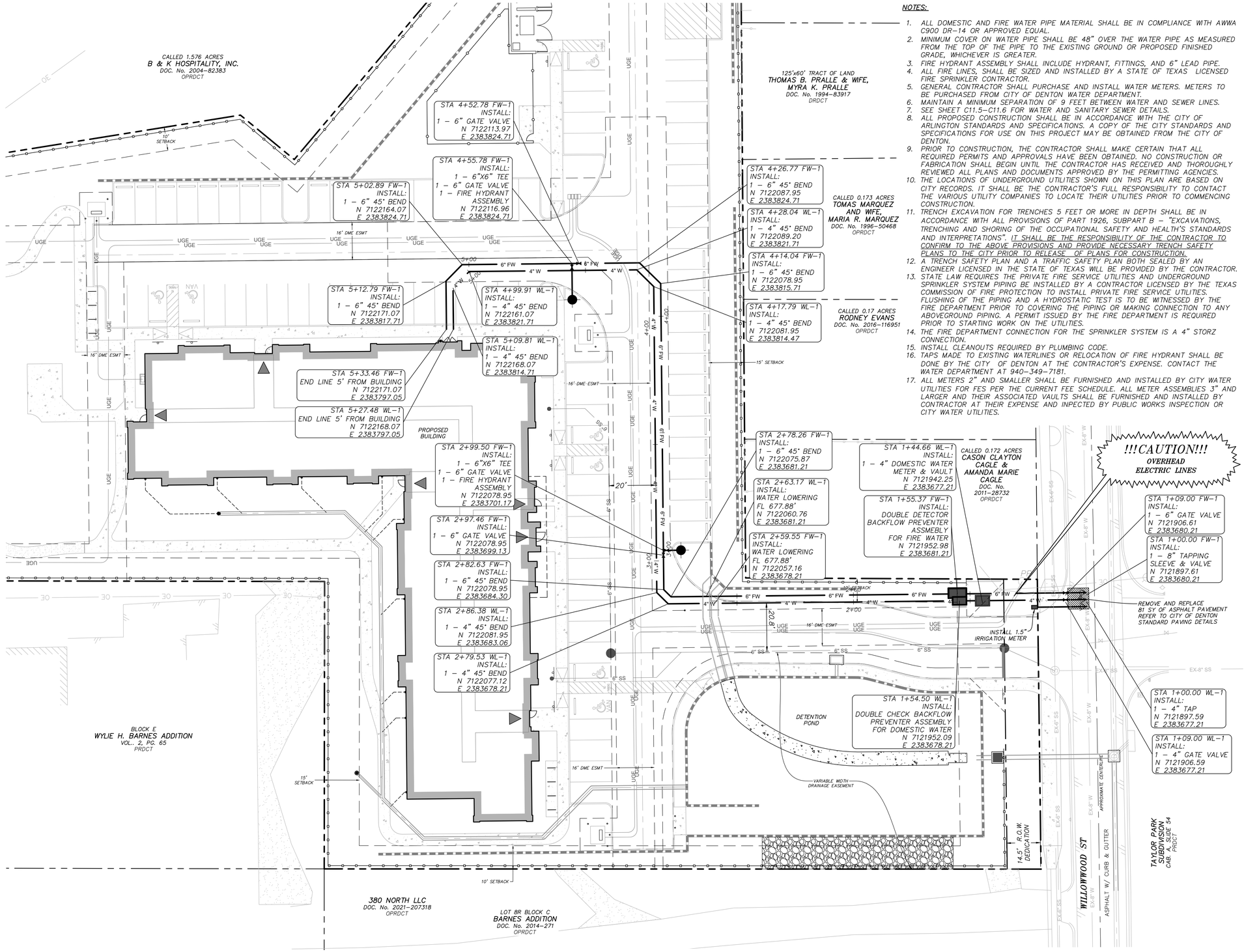

NOTES:

1. ALL DOMESTIC AND FIRE WATER PIPE MATERIAL SHALL BE IN COMPLIANCE WITH AWWA C900 DR-14 OR APPROVED EQUAL.
2. MINIMUM COVER ON WATER PIPE SHALL BE 48" OVER THE WATER PIPE AS MEASURED FROM THE TOP OF THE PIPE TO THE EXISTING GROUND OR PROPOSED FINISHED GRADE, WHICHEVER IS GREATER.
3. FIRE HYDRANT ASSEMBLY SHALL INCLUDE HYDRANT, FITTINGS, AND 6" LEAD PIPE.
4. ALL FIRE LINES, SHALL BE SIZED AND INSTALLED BY A STATE OF TEXAS LICENSED FIRE SPRINKLER CONTRACTOR.
5. GENERAL CONTRACTOR SHALL PURCHASE AND INSTALL WATER METERS. METERS TO BE PURCHASED FROM CITY OF DENTON WATER DEPARTMENT.
6. MAINTAIN A MINIMUM SEPARATION OF 9 FEET BETWEEN WATER AND SEWER LINES.
7. SEE SHEET C11.5-C11.6 FOR WATER AND SANITARY SEWER DETAILS.
8. ALL PROPOSED CONSTRUCTION SHALL BE IN ACCORDANCE WITH THE CITY OF ARLINGTON STANDARDS AND SPECIFICATIONS. A COPY OF THE CITY STANDARDS AND SPECIFICATIONS FOR USE ON THIS PROJECT MAY BE OBTAINED FROM THE CITY OF DENTON.
9. PRIOR TO CONSTRUCTION, THE CONTRACTOR SHALL MAKE CERTAIN THAT ALL REQUIRED PERMITS AND APPROVALS HAVE BEEN OBTAINED. NO CONSTRUCTION OR FABRICATION SHALL BEGIN UNTIL THE CONTRACTOR HAS RECEIVED AND THOROUGHLY REVIEWED ALL PLANS AND DOCUMENTS APPROVED BY THE PERMITTING AGENCIES.
10. THE LOCATIONS OF UNDERGROUND UTILITIES SHOWN ON THIS PLAN ARE BASED ON CITY RECORDS. IT SHALL BE THE CONTRACTOR'S FULL RESPONSIBILITY TO CONTACT THE VARIOUS UTILITY COMPANIES TO LOCATE THEIR UTILITIES PRIOR TO COMMENCING CONSTRUCTION.
11. TRENCH EXCAVATION FOR TRENCHES 5 FEET OR MORE IN DEPTH SHALL BE IN ACCORDANCE WITH ALL PROVISIONS OF PART 1926, SUBPART B - "EXCAVATIONS, TRENCHING AND SHORING OF THE OCCUPATIONAL SAFETY AND HEALTH'S STANDARDS AND INTERPRETATIONS". IT SHALL BE THE RESPONSIBILITY OF THE CONTRACTOR TO CONFIRM TO THE ABOVE PROVISIONS AND PROVIDE NECESSARY TRENCH SAFETY PLANS TO THE CITY PRIOR TO RELEASE OF PLANS FOR CONSTRUCTION.
12. A TRENCH SAFETY PLAN AND A TRAFFIC SAFETY PLAN BOTH SEALED BY AN ENGINEER LICENSED IN THE STATE OF TEXAS WILL BE PROVIDED BY THE CONTRACTOR.
13. STATE LAW REQUIRES THE PRIVATE FIRE SERVICE UTILITIES AND UNDERGROUND SPRINKLER SYSTEM PIPING BE INSTALLED BY A CONTRACTOR LICENSED BY THE TEXAS COMMISSION OF FIRE PROTECTION TO INSTALL PRIVATE FIRE SERVICE UTILITIES. FLUSHING OF THE PIPING AND A HYDROSTATIC TEST IS TO BE WITNESSED BY THE FIRE DEPARTMENT PRIOR TO COVERING THE PIPING OR MAKING CONNECTION TO ANY ABOVEGROUND PIPING. A PERMIT ISSUED BY THE FIRE DEPARTMENT IS REQUIRED PRIOR TO STARTING WORK ON THE UTILITIES.
14. THE FIRE DEPARTMENT CONNECTION FOR THE SPRINKLER SYSTEM IS A 4" STORZ CONNECTION.
15. INSTALL CLEANOUTS REQUIRED BY PLUMBING CODE.
16. TAPS MADE TO EXISTING WATERLINES OR RELOCATION OF FIRE HYDRANT SHALL BE DONE BY THE CITY OF DENTON AT THE CONTRACTOR'S EXPENSE. CONTACT THE WATER DEPARTMENT AT 940-349-7181.
17. ALL METERS 2" AND SMALLER SHALL BE FURNISHED AND INSTALLED BY CITY WATER UTILITIES FOR FES PER THE CURRENT FEE SCHEDULE. ALL METER ASSEMBLIES 3" AND LARGER AND THEIR ASSOCIATED VAULTS SHALL BE FURNISHED AND INSTALLED BY CONTRACTOR AT THEIR EXPENSE AND INPECTED BY PUBLIC WORKS INSPECTION OR CITY WATER UTILITIES.

20 0 10 20 40

1 inch = 20 ft.

LEGEND:

- EXISTING SANITARY SEWER — EX-SS
- EXISTING SEWER MANHOLE — S
- EXISTING WATER LINE — EX-W
- EXISTING WATER VALVE — WV
- EXISTING FIRE HYDRANT
- PROPOSED FIRE HYDRANT ASSEMBLY (INCLUDES ALL FITTINGS)
- EXISTING OVERHEAD ELECTRIC — OHE
- PROPOSED UNDERGROUND ELECTRIC — UGE
- EXISTING POWER POLE
- EXISTING STORM LINE — RCP
- EXISTING STORM INLET
- PROPOSED STORM LINE
- PROPOSED STORM INLET
- PROPOSED GATE VALVE
- PROPOSED WATER LINE — W
- PROPOSED FIRE WATER LINE — FW
- PROPOSED SEWER LINE — SS
- PROPOSED SEWER MANHOLE — SS
- PROPOSED SEWER SERVICE

GENERAL UTILITY NOTES:

ALL EXISTING UTILITY DATA IS PROVIDED FOR INFORMATION ONLY. ALTHOUGH THIS DATA IS SHOWN AS ACCURATELY AS POSSIBLE, THE CONTRACTOR IS CAUTIONED THAT THE OWNER AND THE ENGINEER NEITHER ASSUME NOR IMPLY ANY RESPONSIBILITY FOR THE ACCURACY OF THIS DATA. IT SHALL BE THE CONTRACTOR'S RESPONSIBILITY TO CONTACT THE UTILITY AFFECTED AND VERIFY THESE LOCATIONS AND ELEVATIONS PRIOR TO CONSTRUCTION.

CALL TEXAS 811 OR OTHER UTILITY LOCATING SERVICES 48 HOURS PRIOR TO CONSTRUCTION ACTIVITY. MMA INC. IS NOT RESPONSIBLE FOR KNOWING ALL EXISTING UTILITIES OR DEPICTING EXACT LOCATIONS OF UTILITIES ON DRAWINGS.

811 Know what's below. Call before you dig.

SOURCE BENCHMARK:

CITY OF DENTON MONUMENT #2011 - 3.5" ALUMINUM CAP ON ROD "2011" LOCATED AT JUNCTION OF FRAME ROAD NORTH OF CONCRETE CREEK RUNNING PARALLEL WITH MCKINNEY APPROXIMATELY 37.7' FROM POWER POLE TO THE WEST
A: 611.24'
NAD83 TXNC (GRID)
N: 7128266.50'
E: 2389088.77'

SITE BENCHMARK:

BM #1 - "X" CUT IN SQUARE LOCATED ON THE NORTHWEST CORNER OF AN INLET OFF THE EAST BOUND SIDE OF WILLOWWOOD STREET AND APPROXIMATELY 42' WEST FROM THE CENTERLINE OF JACQUELINE DRIVE

ELEV: 686.09'
NAD83 TXNC (GRID)
N: 7120793.43'
E: 2383257.97'

BM #2 - "X" CUT IN SQUARE LOCATED APPROXIMATELY 272' EAST FROM THE CENTERLINE OF MERCEDES ROAD AT THE END OF OAKWOOD DRIVE ON THE SOUTH SIDE ON THE CURB APPROXIMATELY 50' WEST OF THE CHURCH

ELEV: 688.85'
NAD83 TXNC (GRID)
N: 7121272.19'
E: 2383152.20'

BEARINGS & COORDINATE VALUES SHOWN HEREON ARE IN REFERENCE TO THE NAD83 - TEXAS COORDINATE SYSTEM - NORTH CENTRAL ZONE, 4202, BASED ON GPS OBSERVATIONS UTILIZING THE LEICA GPS REFERENCE NETWORK. ALL DISTANCES SHOWN HEREON WERE ADJUSTED TO SURFACE USING A COMBINED SCALE FACTOR OF 1.0001526521 (0.999847371200), BASE POINT OF 0,0,0.

WATER DEMAND

Area No.	Land Use Type	Area/Count	Unit	Pop. Per Unit	Population	Ave. Daily Demand Per Capita (gpcd)	Avg Day Flow (gpm)	Max Day Factor	Design Flow (gpm)	Fire Flow (gpm)	Max Day Flow (MGD)	Max Day + Fire Flow (MGD)	Max Hour Factor	Max Hour Flow (gpm)	Max Hour Flow (MGD)
1	Multifamily (Units)	60	Units	2.5	150	170	17.71	2	35.42	1500.00	0.051	2.211	1.50	53.13	0.077
				Totals	150		17.71	2.00	35.42	1500.00	2.211		1.50	2303.13	3.317

THE RESERVES AT MAGNOLIA
DENTON, TEXAS

WATER PLAN

mma
civil engineering surveying landscape architecture planning
tbpels registration number: f - 2759
tbpels registration/license number: 10088000
519 east border
arlington, texas 76010
817-469-1671
fax: 817-274-8757
www.mmatexas.com

5/16/2023
STATE OF TEXAS
ROBERT J. CRONIN JR.
122288
LICENSED
PROFESSIONAL ENGINEER

PROJECT NUMBER:	3597-00-02
PROJECT MANAGER:	R. CRONIN
DRAWN BY:	G. SANCHEZ
CHECKED BY:	A. TAYLOR
ISSUE DATE:	5/16/2023

REV.	DATE	DESCRIP.	BY

SHEET CONTENT: WATER PLAN

SHEET NO: C7.1

COPYRIGHT © 2023 MMA, INC.

PLOTTED BY: ISIS HERNANDEZ DATE: 5/16/2023 11:34 AM PATH: P:\3597-00-02\700 Land Development\703 Construction Documents\Design\Prel Sheets\WATER PLAN.dwg

THE RESERVES AT MAGNOLIA
DENTON, TEXAS

SANITARY SEWER PLAN

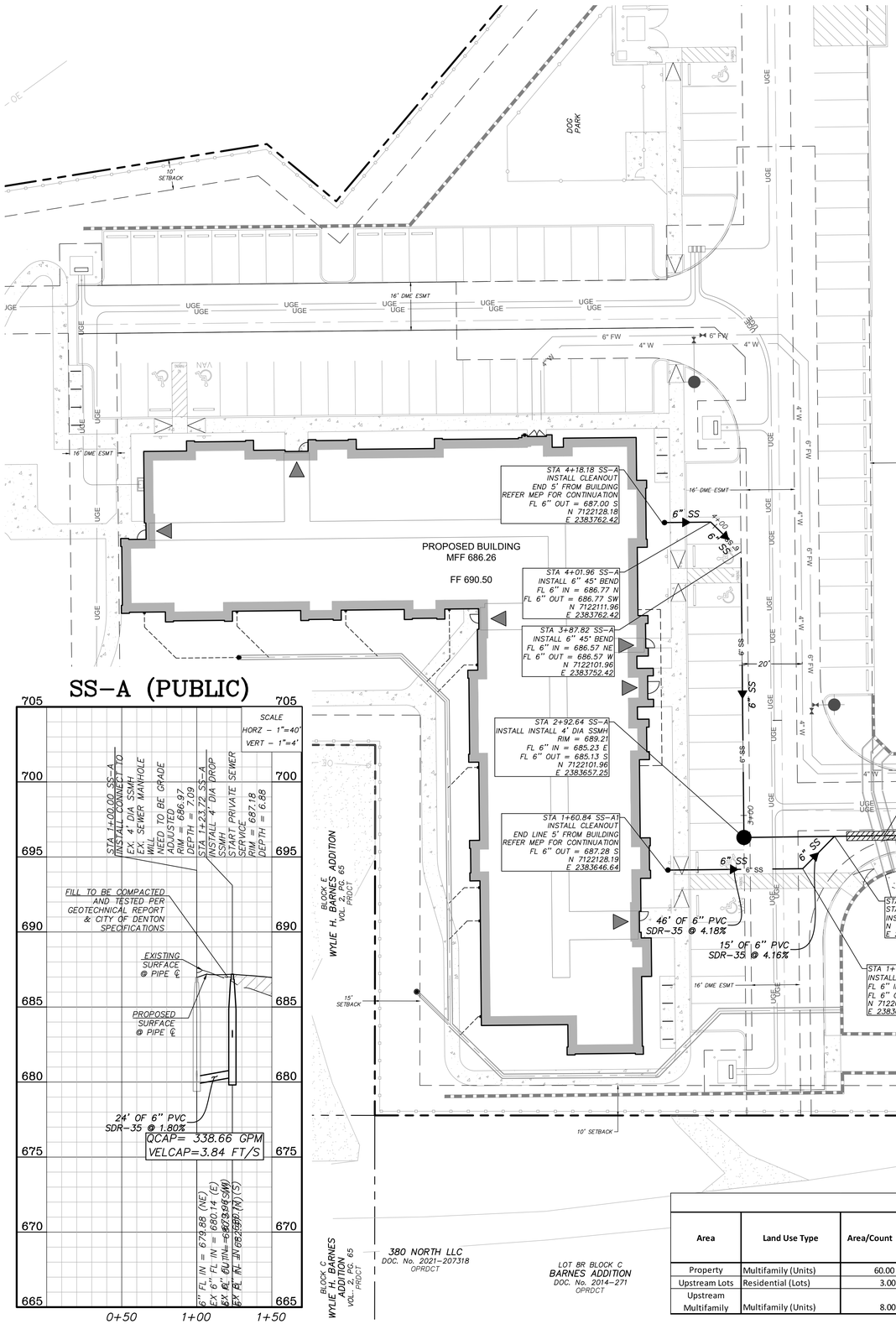

NOTES:

1. MINIMUM COVER ON WATER PIPE SHALL BE 48" OVER THE WATER PIPE AS MEASURED FROM THE TOP OF THE PIPE TO THE EXISTING GROUND OR PROPOSED FINISHED GRADE, WHICHEVER IS GREATER.
2. FIRE HYDRANT ASSEMBLY SHALL INCLUDE HYDRANT, FITTINGS, AND 6" LEAD PIPE.
3. ALL FIRE LINES, SHALL BE SIZED AND INSTALLED BY A STATE OF TEXAS LICENSED FIRE SPRINKLER CONTRACTOR.
4. GENERAL CONTRACTOR SHALL PURCHASE AND INSTALL WATER METERS. METERS TO BE PURCHASED FROM CITY OF DENTON WATER DEPARTMENT.
5. MAINTAIN A MINIMUM SEPARATION OF 9 FEET BETWEEN WATER AND SEWER LINES.
6. SEE SHEET C11.5–C11.6 FOR WATER AND SANITARY SEWER DETAILS.
7. ALL PROPOSED CONSTRUCTION SHALL BE IN ACCORDANCE WITH THE CITY OF ARLINGTON STANDARDS AND SPECIFICATIONS. A COPY OF THE CITY STANDARDS AND SPECIFICATIONS FOR USE ON THIS PROJECT MAY BE OBTAINED FROM THE CITY OF DENTON.
8. PRIOR TO CONSTRUCTION, THE CONTRACTOR SHALL MAKE CERTAIN THAT ALL REQUIRED PERMITS AND APPROVALS HAVE BEEN OBTAINED. NO CONSTRUCTION OR FABRICATION SHALL BEGIN UNTIL THE CONTRACTOR HAS RECEIVED AND THOROUGHLY REVIEWED ALL PLANS AND DOCUMENTS APPROVED BY THE PERMITTING AGENCIES.
9. THE LOCATIONS OF UNDERGROUND UTILITIES SHOWN ON THIS PLAN ARE BASED ON CITY RECORDS. IT SHALL BE THE CONTRACTOR'S FULL RESPONSIBILITY TO CONTACT THE VARIOUS UTILITY COMPANIES TO LOCATE THEIR UTILITIES PRIOR TO COMMENCING CONSTRUCTION.
10. TRENCH EXCAVATION FOR TRENCHES 5 FEET OR MORE IN DEPTH SHALL BE IN ACCORDANCE WITH ALL PROVISIONS OF PART 1926, SUBPART B – "EXCAVATIONS, TRENCHING AND SHORING OF THE OCCUPATIONAL SAFETY AND HEALTH'S STANDARDS AND INTERPRETATIONS". IT SHALL BE THE RESPONSIBILITY OF THE CONTRACTOR TO CONFIRM TO THE ABOVE PROVISIONS AND PROVIDE NECESSARY TRENCH SAFETY PLANS TO THE CITY PRIOR TO RELEASE OF PLANS FOR CONSTRUCTION.
11. A TRENCH SAFETY PLAN AND A TRAFFIC SAFETY PLAN BOTH SEALED BY AN ENGINEER LICENSED IN THE STATE OF TEXAS WILL BE PROVIDED BY THE CONTRACTOR.
12. STATE LAW REQUIRES THE PRIVATE FIRE SERVICE UTILITIES AND UNDERGROUND SPRINKLER SYSTEM PIPING BE INSTALLED BY A CONTRACTOR LICENSED BY THE TEXAS COMMISSION OF FIRE PROTECTION TO INSTALL PRIVATE FIRE SERVICE UTILITIES. FLUSHING OF THE PIPING AND A HYDROSTATIC TEST IS TO BE WITNESSED BY THE FIRE DEPARTMENT PRIOR TO COVERING THE PIPING OR MAKING CONNECTION TO ANY ABOVEGROUND PIPING. A PERMIT ISSUED BY THE FIRE DEPARTMENT IS REQUIRED PRIOR TO STARTING WORK ON THE UTILITIES.
13. THE FIRE DEPARTMENT CONNECTION FOR THE SPRINKLER SYSTEM IS A 4" STORZ CONNECTION.
14. INSTALL CLEANOUTS REQUIRED BY PLUMBING CODE.
15. TAPS MADE TO EXISTING SEWER LINES SHALL BE DONE BY THE CITY OF DENTON AT THE CONTRACTOR'S EXPENSE. CONTACT THE WASTEWATER DEPARTMENT AT 940–349–8489

20 0 10 20 40

1 inch = 20 ft.

LEGEND:

EXISTING SANITARY SEWER	EX-SS
EXISTING SEWER MANHOLE	Ⓢ
EXISTING WATER LINE	EX-W
EXISTING WATER VALVE	WV
EXISTING FIRE HYDRANT	
PROPOSED FIRE HYDRANT ASSEMBLY (INCLUDES ALL FITTINGS)	
EXISTING OVERHEAD ELECTRIC	OHE
EXISTING POWER POLE	
EXISTING STORM LINE	
EXISTING STORM INLET	
PROPOSED STORM LINE	
PROPOSED STORM INLET	
PROPOSED GATE VALVE	
PROPOSED WATER LINE	W
PROPOSED SEWER LINE	SS
PROPOSED SEWER MANHOLE	SS
PROPOSED UNDERGROUND ELECTRIC	UGE

SANITARY SEWER DEMAND

Area	Land Use Type	Area/Count	Unit	Pop. Per Unit	Population	Ave. Daily Demand Per Capita (gpcd)	Avg Day Flow (gpm)	MULTIPLIER	Design Flow (gpm)	Design Flow (cfs)	2/3 Capacity (gpm)	2/3 Capacity (cfs)	Required Min Pipe Size (in)	Recommended Pipe Size at Min Slope (in)	Minimum Slope (%)	Capacity (gpm)
Property	Multifamily (Units)	60.00	Units	2.5	150	100	10.42	4.00	41.68	0.09	27.79	0.06	6	6	1.04	256.82
Upstream Lots	Residential (Lots)	3.00	Units	3.2	9.6	100	0.67	4.00	2.68	0.01	1.79	0.00	6	6	1.04	87
Upstream Multifamily	Multifamily (Units)	8.00	Units	2.5	20	100	1.39	4.00	5.56	0.01	3.71	0.01	6	6	1.04	87
				Totals	179.6	100	12.48	4.00	49.92							

GENERAL UTILITY NOTES:

ALL EXISTING UTILITY DATA IS PROVIDED FOR INFORMATION ONLY. ALTHOUGH THIS DATA IS SHOWN AS ACCURATELY AS POSSIBLE, THE CONTRACTOR IS CAUTIONED THAT THE OWNER AND THE ENGINEER NEITHER ASSUME NOR IMPLY ANY RESPONSIBILITY FOR THE ACCURACY OF THIS DATA. IT SHALL BE THE CONTRACTOR'S RESPONSIBILITY TO CONTACT THE UTILITY AFFECTED AND VERIFY THESE LOCATIONS AND ELEVATIONS PRIOR TO CONSTRUCTION.

CALL TEXAS 811 OR OTHER UTILITY LOCATING SERVICES 48 HOURS PRIOR TO CONSTRUCTION ACTIVITY. MMA INC. IS NOT RESPONSIBLE FOR KNOWING ALL EXISTING UTILITIES OR DEPICTING EXACT LOCATIONS OF UTILITIES ON DRAWINGS.

811 Know what's below. Call before you dig.

SOURCE BENCHMARK:

CITY OF DENTON MONUMENT #2011 – 3.5" ALUMINUM CAP ON ROD "2011" LOCATED AT JUNCTION OF FRAME ROAD NORTH OF CONCRETE CREEK RUNNING PARALLEL WITH MCKINNEY APPROXIMATELY 37.7' FROM POWER POLE TO THE WEST
A: 611.24'
NAD83 TXNC (GRID)
N: 7128266.50'
E: 2389088.77'

SITE BENCHMARK:

BM #1 – "X" CUT IN SQUARE LOCATED ON THE NORTHWEST CORNER OF AN INLET OFF THE EAST BOUND SIDE OF WILLOWWOOD STREET AND APPROXIMATELY 42' WEST FROM THE CENTERLINE OF JACQUELINE DRIVE

ELEV: 686.09'
NAD83 TXNC (GRID)
N: 7120793.43'
E: 2383257.97'

BM #2 – "X" CUT IN SQUARE LOCATED APPROXIMATELY 272' EAST FROM THE CENTERLINE OF MERCEDES ROAD AT THE END OF OAKWOOD DRIVE ON THE SOUTH SIDE ON THE CURB APPROXIMATELY 50' WEST OF THE CHURCH

ELEV: 688.85'
NAD83 TXNC (GRID)
N: 7121272.19'
E: 2383152.20'

BEARINGS & COORDINATE VALUES SHOWN HEREON ARE IN REFERENCE TO THE NAD83 – TEXAS COORDINATE SYSTEM – NORTH CENTRAL ZONE, 4202, BASED ON GPS OBSERVATIONS UTILIZING THE LEICA GPS REFERENCE NETWORK. ALL DISTANCES SHOWN HEREON WERE ADJUSTED TO SURFACE USING A COMBINED SCALE FACTOR OF 1.0001526521 (0.999847371200), BASE POINT OF 0,0,0.

mma
civil engineering surveying landscape architecture planning
tbpels registration number: f – 2759
tbpels registration/license number: 10088000
519 east border
arlington, texas 76010
817-469-1671
fax: 817-274-8757
www.mmatexas.com

5/16/2023
STATE OF TEXAS
ROBERT J. CRONIN JR.
122288
LICENSED PROFESSIONAL ENGINEER

PROJECT NUMBER:	3597-00-02
PROJECT MANAGER:	R. CRONIN
DRAWN BY:	G. SANCHEZ
CHECKED BY:	A. TAYLOR
ISSUE DATE:	5/16/2023

REV.	DATE	DESCRIP.	BY

SHEET CONTENT:

SANITARY SEWER PLAN

SHEET NO:

C7.2

COPYRIGHT © 2023 MMA, INC.

PLOTTED BY: ISIS HERNANDEZ DATE: 5/16/2023 11:35 AM PATH: P:\3597-00-02\700 Land Development\703 Construction Documents\Design\Plot Sheets\SANITARY SEWER PLAN.dwg

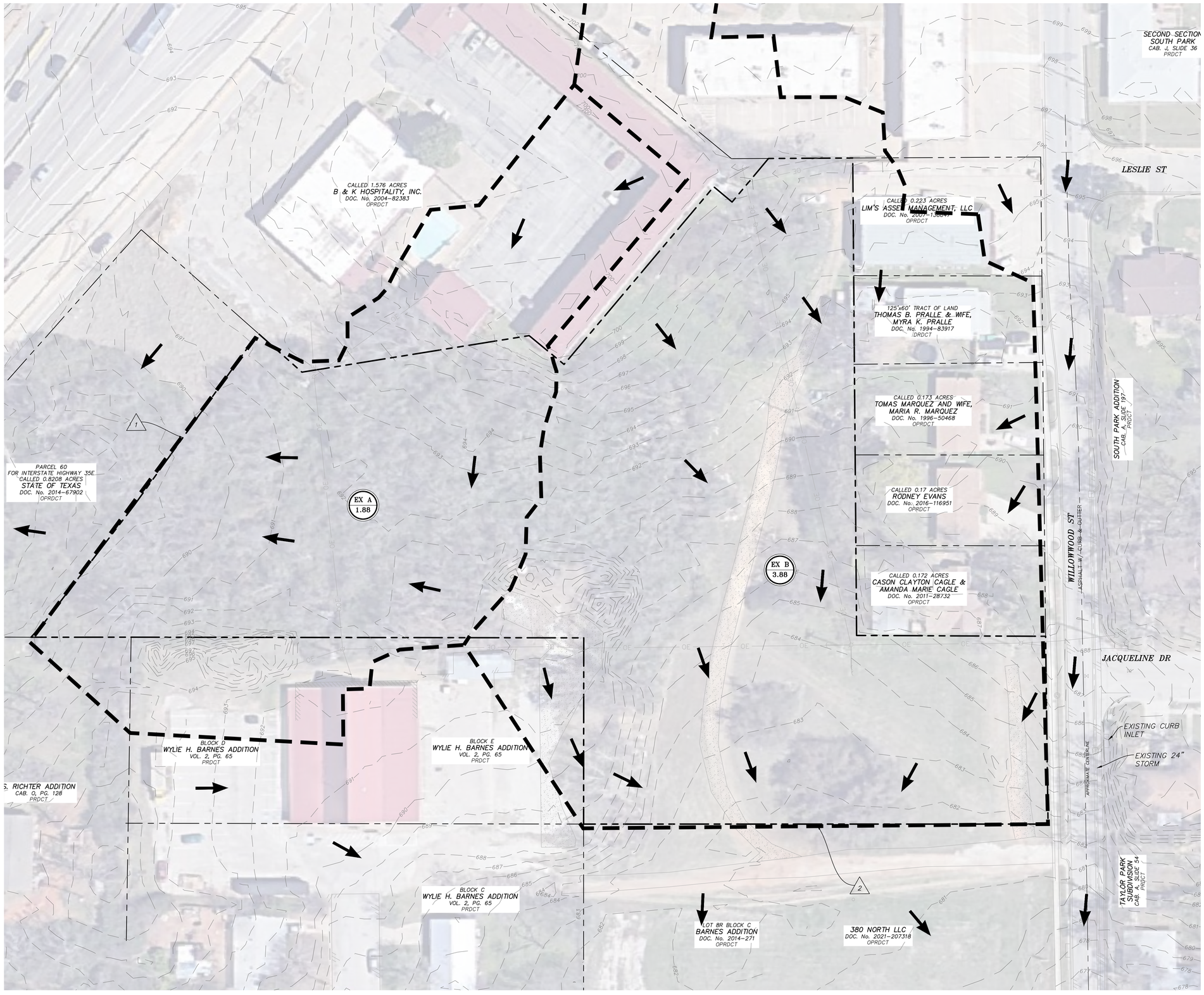

30 0 15 30 60

1 inch = 30 ft.

LEGEND:

- EXISTING MAJOR CONTOUR — 640 —
- EXISTING MINOR CONTOUR — 641 —
- DRAINAGE AREA BOUNDARY
- DRAINAGE AREA LABEL
  - NAME
  - AREA (ACRES)
  - A1 / 2.6
- FLOW AREA
- DESIGN POINT 1

NOTES:

1. PROPERTY IS ZONED PLANNED DEVELOPMENT 'PD' MULTI-FAMILY.
2. DESIGN CRITERIA IS BASED ON CITY OF DENTON STORMWATER DESIGN CRITERIA MANUAL DATED OCTOBER 2022.
3. EXISTING CONTOURS ARE BASED ON TOPOGRAPHIC SURVEY PREPARED BY MMA, DATED DECEMBER, 2022 AND LIDAR COMPLETED IN 2022 DOWNLOADED FROM TNRIS.
4. DRAINAGE AREAS ARE BASED ON PROPOSED GRADING DESIGN, EXISTING TOPOGRAPHY, AND ASBUILT PLAN INFORMATION.
5. REFER TO SHEETS C8.4-#### FOR STORM PLAN AND PROFILES.

GENERAL UTILITY NOTES:

ALL EXISTING UTILITY DATA IS PROVIDED FOR INFORMATION ONLY. ALTHOUGH THIS DATA IS SHOWN AS ACCURATELY AS POSSIBLE, THE CONTRACTOR IS CAUTIONED THAT THE OWNER AND THE ENGINEER NEITHER ASSUME NOR IMPLY ANY RESPONSIBILITY FOR THE ACCURACY OF THIS DATA. IT SHALL BE THE CONTRACTOR'S RESPONSIBILITY TO CONTACT THE UTILITY AFFECTED AND VERIFY THESE LOCATIONS AND ELEVATIONS PRIOR TO CONSTRUCTION.

CALL TEXAS 811 OR OTHER UTILITY LOCATING SERVICES 48 HOURS PRIOR TO CONSTRUCTION ACTIVITY. MMA INC. IS NOT RESPONSIBLE FOR KNOWING ALL EXISTING UTILITIES OR DEPICTING EXACT LOCATIONS OF UTILITIES ON DRAWINGS.

811 Know what's below. Call before you dig.

SOURCE BENCHMARK:

CITY OF DENTON MONUMENT #2011 – 3.5" ALUMINUM CAP ON ROD "2011" LOCATED AT JUNCTION OF FRAME ROAD NORTH OF CONCRETE CREEK RUNNING PARALLEL WITH MCKINNEY APPROXIMATELY 37.7' FROM POWER POLE TO THE WEST
A: 611.24'
NAD83 TXNC (GRID)
N: 7128266.50'
E: 2389088.77'

SITE BENCHMARK:

BM #1 – "X" CUT IN SQUARE LOCATED ON THE NORTHWEST CORNER OF AN INLET OFF THE EAST BOUND SIDE OF WILLOWWOOD STREET AND APPROXIMATELY 42' WEST FROM THE CENTERLINE OF JACQUELINE DRIVE

ELEV: 686.09'
NAD83 TXNC (GRID)
N: 7120793.43'
E: 2383257.97'

BM #2 – "X" CUT IN SQUARE LOCATED APPROXIMATELY 272' EAST FROM THE CENTERLINE OF MERCEDES ROAD AT THE END OF OAKWOOD DRIVE ON THE SOUTH SIDE ON THE CURB APPROXIMATELY 50' WEST OF THE CHURCH

ELEV: 688.85'
NAD83 TXNC (GRID)
N: 7121272.19'
E: 2383152.20'

BEARINGS & COORDINATE VALUES SHOWN HEREON ARE IN REFERENCE TO THE NAD83 – TEXAS COORDINATE SYSTEM – NORTH CENTRAL ZONE, 4202, BASED ON GPS OBSERVATIONS UTILIZING THE LEICA GPS REFERENCE NETWORK. ALL DISTANCES SHOWN HEREON WERE ADJUSTED TO SURFACE USING A COMBINED SCALE FACTOR OF 1.0001526521 (0.999847371200), BASE POINT OF 0,0,0.

THE RESERVES AT MAGNOLIA
DENTON, TEXAS

PRE-DEVELOPED DRAINAGE AREA MAP

mma
civil engineering surveying landscape architecture planning
tbpels registration number: f - 2759
tbpels registration/license number: 10088000
519 east border
arlington, texas 76010
817-469-1671
fax: 817-274-8757
www.mmatexas.com

5/16/2023

STATE OF TEXAS
ROBERT J. CRONIN JR.
122288
LICENSED PROFESSIONAL ENGINEER

PROJECT NUMBER:	3597-00-02
PROJECT MANAGER:	R. CRONIN
DRAWN BY:	G. SANCHEZ
CHECKED BY:	A. TAYLOR
ISSUE DATE:	5/16/2023

REV.	DATE	DESCRIP.	BY

SHEET CONTENT:

PRE-DEVELOPED DRAINAGE AREA MAP

SHEET NO:

C8.0

COPYRIGHT © 2023 MMA, INC.

PLOTTED BY: ISIS HERNANDEZ DATE: 5/16/2023 11:35 AM PATH: P:\3597-00-02\700 Land Development\703 Construction Documents\Dwgs\Plot Sheets\[C8_DRAINAGE_AREA MAP.dwg

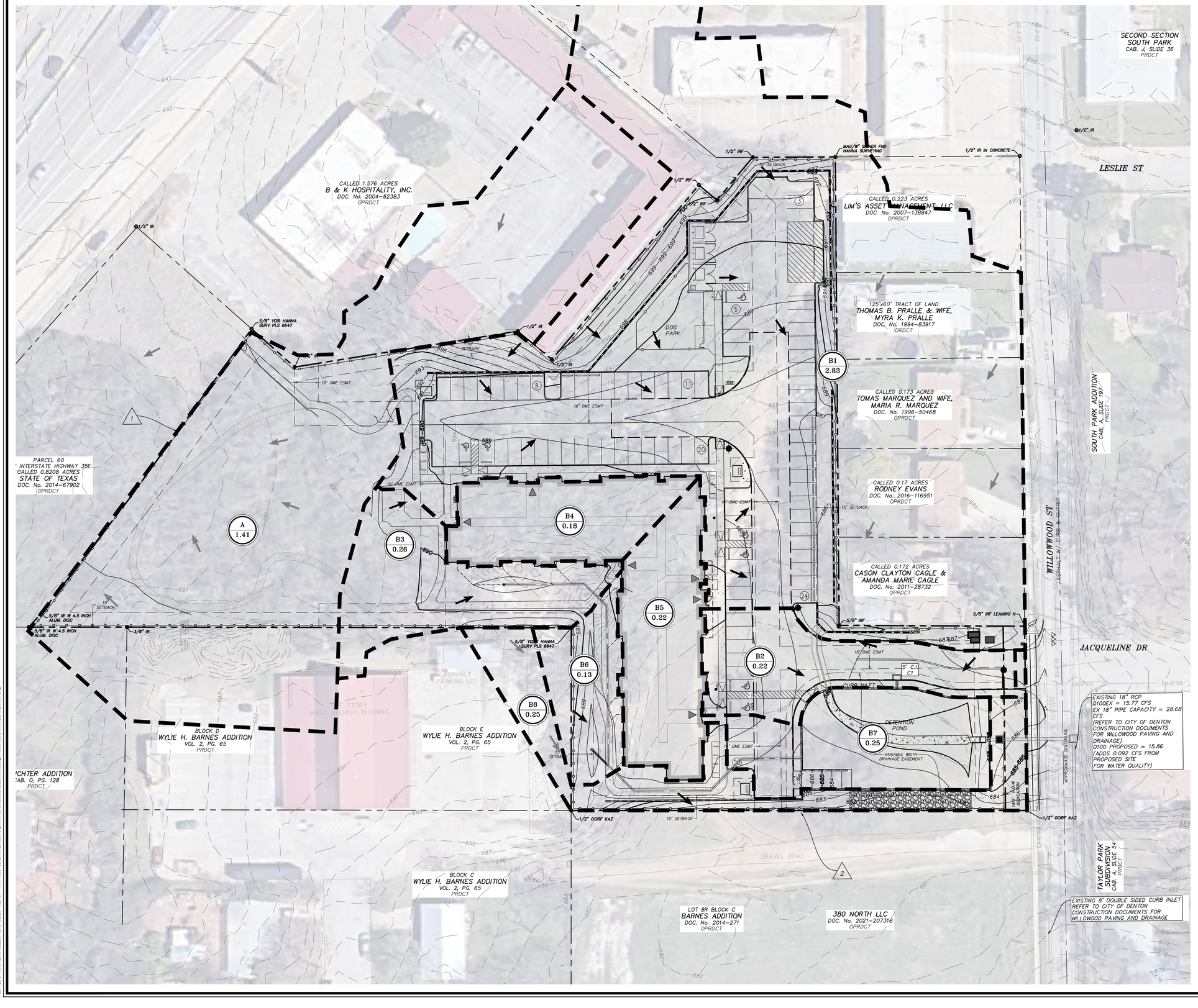

POST DEVELOPED DRAINAGE AREA MAP

THE RESERVES AT MAGNOLIA
DENTON, TEXAS

LEGEND:

- EXISTING MAJOR CONTOUR
- EXISTING MINOR CONTOUR
- PROPOSED MINOR CONTOUR
- PROPOSED MAJOR CONTOUR
- PROPOSED STORM DRAIN
- DRAINAGE AREA BOUNDARY
- DRAINAGE AREA LABEL (NAME / AREA (ACRES))
- INLET DESIGNATION
- FLOW AREA
- DESIGN POINT

NOTES:

1. PROPERTY IS ZONED PLANNED DEVELOPMENT 'PD' MULTI-FAMILY.
2. DESIGN CRITERIA IS BASED ON CITY OF DENTON STORMWATER DESIGN CRITERIA MANUAL DATED OCTOBER 2022.
3. EXISTING CONTOURS ARE BASED ON TOPOGRAPHIC SURVEY PREPARED BY MMA, DATED DECEMBER, 2022 AND LIDAR COMPLETED IN 2022 DOWNLOADED FROM TNRIS.
4. DRAINAGE AREAS ARE BASED ON PROPOSED GRADING DESIGN, EXISTING TOPOGRAPHY, AND ASBUILT PLAN INFORMATION.
5. REFER TO SHEETS C8.4-C8.5 FOR STORM PLAN AND PROFILES.

GENERAL UTILITY NOTES:

ALL EXISTING UTILITY DATA IS PROVIDED FOR INFORMATION ONLY. ALTHOUGH THIS DATA IS SHOWN AS ACCURATELY AS POSSIBLE, THE CONTRACTOR IS CAUTIONED THAT THE OWNER AND THE ENGINEER NEITHER ASSUME NOR IMPLY ANY RESPONSIBILITY FOR THE ACCURACY OF THIS DATA. IT SHALL BE THE CONTRACTOR'S RESPONSIBILITY TO CONTACT THE UTILITY AFFECTED AND VERIFY THESE LOCATIONS AND ELEVATIONS PRIOR TO CONSTRUCTION.

CALL TEXAS 811 OR OTHER UTILITY LOCATING SERVICES 48 HOURS PRIOR TO CONSTRUCTION ACTIVITY. MMA INC. IS NOT RESPONSIBLE FOR KNOWING ALL EXISTING UTILITIES OR DEPICTING EXACT LOCATIONS OF UTILITIES ON DRAWINGS.

811 Know what's below. Call before you dig.

SOURCE BENCHMARK:

CITY OF DENTON MONUMENT #2011 – 3.5" ALUMINUM CAP ON ROD "2011" LOCATED AT JUNCTION OF FRAME ROAD NORTH OF CONCRETE CREEK RUNNING PARALLEL WITH MCKINNEY APPROXIMATELY 37.7' FROM POWER POLE TO THE WEST

A: 611.24'
NAD83 TXNC (GRID)
N: 7128266.50'
E: 2389088.77'

SITE BENCHMARK:

BM #1 – "X" CUT IN SQUARE LOCATED ON THE NORTHWEST CORNER OF AN INLET OFF THE EAST BOUND SIDE OF WILLOWWOOD STREET AND APPROXIMATELY 42' WEST FROM THE CENTERLINE OF JACQUELINE DRIVE

ELEV: 686.09'
NAD83 TXNC (GRID)
N: 7120793.43'
E: 2383257.97'

BM #2 – "X" CUT IN SQUARE LOCATED APPROXIMATELY 272' EAST FROM THE CENTERLINE OF MERCEDES ROAD AT THE END OF OAKWOOD DRIVE ON THE SOUTH SIDE ON THE CURB APPROXIMATELY 50' WEST OF THE CHURCH

ELEV: 688.85'
NAD83 TXNC (GRID)
N: 7121272.19'
E: 2383152.20'

BEARINGS & COORDINATE VALUES SHOWN HEREON ARE IN REFERENCE TO THE NAD83 – TEXAS COORDINATE SYSTEM – NORTH CENTRAL ZONE, 4202, BASED ON GPS OBSERVATIONS UTILIZING THE LEICA GPS REFERENCE NETWORK. ALL DISTANCES SHOWN HEREON WERE ADJUSTED TO SURFACE USING A COMBINED SCALE FACTOR OF 1.0001526521 (0.999847371200). BASE POINT OF 0,0,0.

mma
civil engineering surveying landscape architecture planning
tbpels registration number: f - 2759
tbpels registration/license number: 10088000
519 east border
arlington, texas 76010
817-469-1671
fax: 817-274-8757
www.mmatexas.com

5/16/2023

STATE OF TEXAS
ROBERT J. CRONIN JR.
122288
LICENSED PROFESSIONAL ENGINEER

PROJECT NUMBER:	3597-00-02
PROJECT MANAGER:	R. CRONIN
DRAWN BY:	G. SANCHEZ
CHECKED BY:	A. TAYLOR
ISSUE DATE:	5/16/2023

REV.	DATE	DESCRIP.	BY

SHEET CONTENT:
POST DEVELOPED DRAINAGE AREA MAP

SHEET NO:
C8.1

COPYRIGHT © 2023 MMA, INC.

PLOTTED BY: ISIS HERNANDEZ DATE: 5/16/2023 11:36 AM PATH: P:\3597-00-02\700 Land Development\703 Construction Documents\Design\Post Sheets\DRAINAGE AREA MAP.dwg

NOTES:

1. ALL DRAINAGE CALCULATIONS ON THIS SHEET ARE PERFORMED USING NRCS (SCS) METHODOLOGY. NO RATIONAL CALCULATIONS ARE UTILIZED FOR THE DETENTION POND PRE/POST COMPARISON.

EXISTING RUNOFF CALCULATIONS

BASIN PARAMETERS

Area Name	Area (ac.)	Base Composite CN	Percent Impervious	Composite Curve Number	Time of Concentration (min)
EX A (DP 1)	1.88	80	24.57	84.4	4.58
EX B (DP 2)	3.88	80	34.78	86.3	6.11

	Segment Information				Sheet Flow			Shallow Flow		Channel Flow							
DA	Segment	Flow Type	Length	Slope (ft/ft)	Rainfall Depth 2yr24hr	Manning's Coefficient	Velocity (fps)	Surface Type	Velocity (fps)	Section Area	Wetted Perimeter	Manning's Coefficient	Velocity (fps)	Description	Segment TOC (min)	Segment	DA
EX A	1	Sheet Flow	50	0.0018	3.63	0.011	0.49								1.71	1	EX A
EX A	2	Shallow Concentrated Flow	89	0.0034				Paved	1.19						1.25	2	EX A
EX A	3	Shallow Concentrated Flow	295	0.0353				Unpaved	3.03						1.62	3	EX A
EX B	1	Sheet Flow	50	0.0064	3.63	0.011	0.81								1.03	1	EX B
EX B	2	Shallow Concentrated Flow	413	0.0171				Paved	2.66						2.59	2	EX B
EX B	3	Shallow Concentrated Flow	462	0.0366				Unpaved	3.09						2.49	3	EX B

PROPOSED RUNOFF CALCULATIONS

BASIN PARAMETERS

Area Name	Area (ac.)	Base Composite CN	Percent Impervious	Composite Curve Number	Time of Concentration (min)
A	1.41	80	33.55	86	4.49
B1	2.83	80	71.26	92.8	7.5
B2	1.26	80	57.76	90.4	5.78
B3	0.25	80	28.14	85.1	5.12

	Segment Information				Sheet Flow			Shallow Flow		Channel Flow							
DA	Segment	Flow Type	Length	Slope (ft/ft)	Rainfall Depth 2yr24hr	Manning's Coefficient	Velocity (ft/s)	Surface Type	Velocity (ft/s)	Section Area	Wetted Perimeter	Manning's Coefficient	Velocity (ft/s)	Description	Segment TOC (min)	Segment	DA
A	1	Sheet Flow	50	0.0018	3.63	0.011	0.49								1.71	1	A
A	2	Shallow Concentrated Flow	89	0.0034				Paved	1.19						1.25	2	A
A	3	Shallow Concentrated Flow	283	0.0367				Unpaved	3.09						1.53	3	A
B1	1	Sheet Flow	50	0.0064	3.63	0.011	0.81								1.03	1	B1
B1	2	Shallow Concentrated Flow	410	0.0165				Paved	2.61						2.62	2	B1
B1	3	Shallow Concentrated Flow	16	0.0775				Unpaved	4.49						0.06	3	B1
B1	4	Shallow Concentrated Flow	160	0.0284				Paved	3.43						0.78	4	B1
B1	5	Channel Flow	150	0.0284						0.284	5.9	0.04	0.83	Trapezoid channel, 2' bottom, 50:1;4:1 sides, .07' depth	3.01	5	B1
B2	1	Sheet Flow	50	0.0322	3.63	0.15	0.19								4.37	1	B2
B2	2	Shallow Concentrated Flow	93	0.0288				Unpaved	2.74						0.57	2	B2
B2	3	Channel Flow	325	0.01						1.77	4.71	0.012	6.44	18" HDPE pipe, flowing full	0.84	3	B2
B3	1	Sheet Flow	77	0.0514	3.63	0.15	0.25								5.12	1	B3

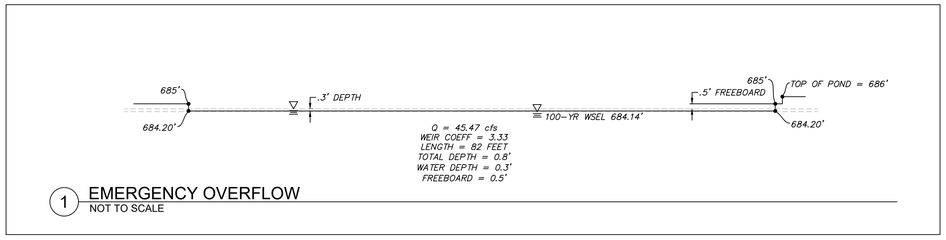

1 EMERGENCY OVERFLOW
NOT TO SCALE

ANALYSIS POINT PRE/POST COMPARISON

Junction	Existing Discharge (cfs)			Proposed Discharge (cfs)			Difference		
	1-Yr	25-Yr	100-Yr	1-Yr	25-Yr	100-Yr	1-Yr	25-Yr	100-Yr
1	6.5	17.8	23.8	5.1	13.6	18.1	-1.4	-4.2	-5.6
2	13.8	36.6	48.7	12.5	35.9	48.1	-1.3	-0.7	-0.5

Detention Pond Results

Storm (year)	Peak inflow (cfs)	Peak Outflow (cfs)	WSEL	Storage (cu-ft)	Freeboard
WQ		0.092	681.46	12481	4.54
1	16.44	11.88	683.11	8451	2.89
25	38.51	33.90	683.89	14130	2.11
100	50.10	45.47	684.14	16117	1.86
Outfall Structure	1-1.25" orifice (water quality) at FL elevation 679.9' and 8 - 8" orifices at FL elevation 682' and 9' broad crested weir at elevation 683.20'				
Top of Pond	686				

Stage	Elevation	Total Storage (cu-ft)	Discharge (cfs)
0	682.00	0	0
0.40	682.40	3076	1.6
0.80	682.80	6168	7.04
1.20	683.20	9071	12.52
1.60	683.60	11864	22.71
2.00	684.00	15002	38.8
2.20	684.20	16576	48.34
2.40	684.40	18154	58.75
2.60	684.60	19735	69.88
2.80	684.80	21320	81.77
3.00	685.00	22909	94.33
3.20	685.20	24501	107.53
3.40	685.40	26097	121.34
3.50	685.50	27696	128.46
3.80	685.80	29300	150.68
4.00	686.00	30906	166.16

Hydrograph Report 1

Hydraflow Hydrographs Extension for Autodesk® Civil 3D® by Autodesk, Inc. v2021 — Monday, 05 / 15 / 2023

Hyd. No. 8

Pond

Hydrograph type	= Reservoir	Peak discharge	= 11.88 cfs
Storm frequency	= 1 yrs	Time to peak	= 722 min
Time interval	= 1 min	Hyd. volume	= 36,216 cuft
Inflow hyd. No.	= 7 - Pond Junction	Max. Elevation	= 683.11 ft
Reservoir name	= Adjusted Proposed	Max. Storage	= 8,451 cuft

Storage Indication method used.

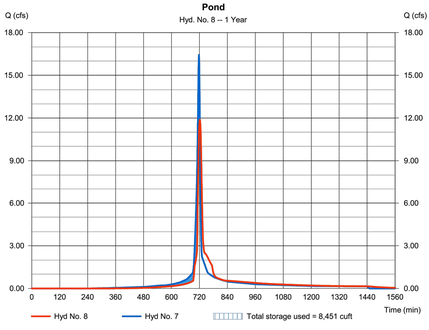

Hydrograph Report 2

Hydraflow Hydrographs Extension for Autodesk® Civil 3D® by Autodesk, Inc. v2021 — Monday, 05 / 15 / 2023

Hyd. No. 8

Pond

Hydrograph type	= Reservoir	Peak discharge	= 33.90 cfs
Storm frequency	= 25 yrs	Time to peak	= 720 min
Time interval	= 1 min	Hyd. volume	= 90,109 cuft
Inflow hyd. No.	= 7 - Pond Junction	Max. Elevation	= 683.89 ft
Reservoir name	= Adjusted Proposed	Max. Storage	= 14,130 cuft

Storage Indication method used.

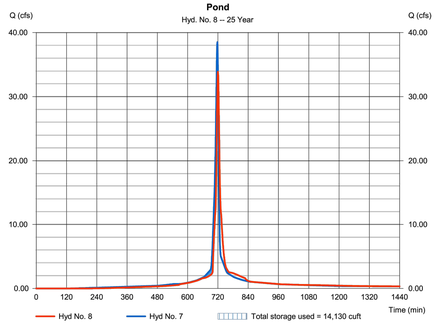

Hydrograph Report 3

Hydraflow Hydrographs Extension for Autodesk® Civil 3D® by Autodesk, Inc. v2021 — Monday, 05 / 15 / 2023

Hyd. No. 8

Pond

Hydrograph type	= Reservoir	Peak discharge	= 45.47 cfs
Storm frequency	= 100 yrs	Time to peak	= 720 min
Time interval	= 1 min	Hyd. volume	= 119,276 cuft
Inflow hyd. No.	= 7 - Pond Junction	Max. Elevation	= 684.14 ft
Reservoir name	= Adjusted Proposed	Max. Storage	= 16,117 cuft

Storage Indication method used.

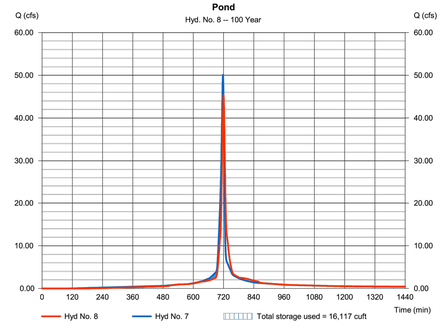

WATER QUALITY VOLUME CALCULATIONS

$I = 56.34$

$R_v = 0.05 + 0.009 \cdot I = 0.5571$

$A_{All} = 2.62$

$A_p = 0$

$A = A_{All} - A_p = 2.62$

$WQ_v = \frac{1.5 \cdot R_v \cdot A}{12} = 0.1824$ ac. ft.

$WQ_{vcf} = WQ_v \cdot 43560 = 7946.9623$ cu. ft.

Oriffice Sizing Calculations

$T_{drain} = 24$ hours

$Q = \frac{WQ_{vcf}}{\left(T_{drain} \cdot 60 \cdot 60\right)} = 0.092$ cfs

$C_d = 0.62$

$h = 1.8$ ft

$\text{solve}\left(Q = C_d \cdot \left(\frac{1}{4} \cdot \pi \cdot \left(\frac{D}{12}\right)^2\right) \cdot \sqrt{2 \cdot 32.2 \cdot h},\ D,\ 0,\ 20\right) = 1.5894$

THE RESERVES AT MAGNOLIA
DENTON, TEXAS

DETENTION CALCULATIONS

mma
civil engineering surveying landscape architecture planning
tbpels registration number: f – 2759
tbpels registration/license number: 10088000
519 east border
arlington, texas 76010
817-469-1671
fax: 817-274-8757
www.mmatexas.com

5/16/2023
STATE OF TEXAS
ROBERT J. CRONIN JR.
122288
LICENSED
PROFESSIONAL ENGINEER

PROJECT NUMBER:	3597-00-02
PROJECT MANAGER:	R. CRONIN
DRAWN BY:	G. SANCHEZ
CHECKED BY:	A. TAYLOR
ISSUE DATE:	5/16/2023

REV.	DATE	DESCRIP.	BY

SHEET CONTENT:

DETENTION CALCULATIONS

SHEET NO:

C8.2

COPYRIGHT © 2023 MMA, INC.

PLOTTED BY: ISIS HERNANDEZ DATE: 5/16/2023 11:35 AM PATH: P:\3597-00-02\700 Land Development\703 Construction Documents\Design\Plot Sheets\DRAINAGE AREA MAP.dwg

NOTES:

1. RATIONAL METHOD CALCULATIONS ON THIS SHEET ARE USED FOR STORM SYSTEM CALCULATIONS ONLY

Reserves at Magnolia
PROPOSED CONDITIONS DRAINAGE AREA COMPUTATIONS

Area Name	Runoff Coef. "C"	AREA "A" (ac.)	Total "CA"	Time of Concentration (min)	Ca 2	C*Ca 2	I 2yr (in/hr)	Q 2yr (cfs)	Ca 5	C*Ca 5	I5 (in/hr)	Q5 (cfs)	Ca 25	C*Ca 25	I25 (in/hr)	Q25 (cfs)	Ca 100	C*Ca 100	I100 (in/hr)	Q100 (cfs)	COMMENTS
1	2	3	4	5	6	7	8	9	10	11	12	13	14	15	16	17	18	19	20	21	22
B1	0.77	2.83	2.17	10.00	1.00	0.77	4.32	9.35	1.00	0.77	5.57	12.07	1.10	0.84	7.70	18.34	1.25	0.96	9.45	25.56	TO PROP. CULVERT
B2	0.85	0.22	0.19	10.00	1.00	0.85	4.32	0.81	1.00	0.85	5.57	1.04	1.10	0.94	7.70	1.58	1.25	1.00	9.45	2.08	TO PROP. CURB INLET C1
B3	0.85	0.26	0.22	10.00	1.00	0.85	4.32	0.95	1.00	0.85	5.57	1.23	1.10	0.94	7.70	1.87	1.25	1.00	9.45	2.46	TO LANDSCAPE DRAINS
B4	0.85	0.18	0.15	10.00	1.00	0.85	4.32	0.66	1.00	0.85	5.57	0.85	1.10	0.94	7.70	1.30	1.25	1.00	9.45	1.70	ROOF DRAINS
B5	0.85	0.22	0.19	10.00	1.00	0.85	4.32	0.81	1.00	0.85	5.57	1.04	1.10	0.94	7.70	1.58	1.25	1.00	9.45	2.08	ROOF DRAINS
B6	0.85	0.13	0.11	10.00	1.00	0.85	4.32	0.48	1.00	0.85	5.57	0.62	1.10	0.94	7.70	0.94	1.25	1.00	9.45	1.23	TO LANDSCAPE DRAINS
B7	0.53	0.27	0.14	10.00	1.00	0.53	4.32	0.62	1.00	0.53	5.57	0.80	1.10	0.58	7.70	1.21	1.25	0.66	9.45	1.69	DETENTION POND

Reserves at Magnolia
WEIGHTED C VALUE COMPUTATIONS

AREA NAME	DESCRIPTION	AREA - A (AC.)	"C"	C*A	WEIGHTED "C"
Area No.					
	B1 MULTIFAMILY HEAVY	1.2400	0.85	1.0540	
	B1 COMMERCIAL HEAVY	0.7850	0.80	0.6280	
	B1 SINGLE FAMILY (1/4 ACRE LOTS)	0.8050	0.60	0.4830	
				-	
				-	
	TOTALS	**2.8300**		**2.1650**	**0.765**
Area No.					
	B7 POND	0.1920	0.40	0.0768	
	B7 MULTIFAMILY	0.0780	0.85	0.0663	
				-	
				-	
				-	
	TOTALS	**0.2700**		**0.1431**	**0.530**

Reserves at Magnolia Storm Hydraulic Calculations

Line No.	Station From	Station To	Pipe Length	Drainage Area No.	Area	Total Area	C	C_a/C_f	Increment C*C$_f$*A	Total CA	Time of Concentration: Inlet	Travel	Increment	Design	I5	I (Design Below)	Q5	Q (Design Below)	Crown Overtop	Inlet Bypass	Q_{Pipe}	Pipe Size: No.	Span	Dia/Height	Manning's 'n'	Pipe Capacity	S_f	HGL: D/S	HGL: U/S	Head Loss: V_1	V_2	$V_1^2/2g$	$V_2^2/2g$	K_j	$K_jV_1^2/2g$	H_k	Entrance Control: Hwic	Entrance Control: Control	Design HGL	Invert: From	Invert: To	Pipe Slope	T/C	Comments
	ft	ft			acres	acres					min	min	min	min	in/hr	in/hr	cfs	cfs	cfs	cfs	cfs		ft	in/ft		cfs	%	ft	ft	ft/s	ft/s	ft	ft		ft	ft	ft	True/False	ft	ft	ft	%	ft	
	1	2	3	4	5	6	7a	7b	8	9	10	11	12	13	14	15	16	17	18a	18b	19	20a	20b	20c	21	22	23	24	25	26	27	28	29	30	31	32	33	34	35	36	37	38	39	40
SD-A																**100**		**100**																									
1	1+59.05	1+49.97	9.08	WQ		0.00	0.53	1.25		0.00	10.00	3.03	10.00	10.00	5.57	9.45	0.00	0.00			0.09	1		18	0.013	13.25	0.00%	679.10	679.10	0.00	0.05	0.00	0.00	0.00	0.00	0.00	0.00	FALSE	679.10	678.16	678.02	1.59%	682.00	Continuation From Another Line,Super Critical Flow
2	1+49.97	1+00.00	49.97			0.00	0.53	1.25		0.00	10.00	16.66	13.03	10.00	5.57	9.45	0.00	0.00			0.09	1		18	0.015	11.48	0.00%	679.00	679.00	0.05	0.05	0.00	0.00	1.00	0.00	0.10	0.00	FALSE	679.10	678.02	677.22	1.59%	686.43	Manhole on Main Line with no Branch
SD-B																**100**		**100**																									
1	1+08.00	1+00.00	8.00	B2	0.22	0.22	0.85	1.25	0.22	0.22	10.00	0.11	10.00	10.00	5.57	9.45	1.23	2.08			2.08	1		18	0.013	19.65	0.04%	684.14	684.14	0.00	1.18	0.00	0.02	1.25	0.00	0.10	0.00	FALSE	684.24	682.28	682.00	3.50%	686.29	Inlet or Manhole at Beginning of Line
SD-C																**100**		**100**																									
1	1+45.20	1+38.09	7.11	B1	2.83	2.83	0.77	1.25	2.71	2.71	10.00	0.05	10.00	10.00	5.57	9.45	15.09	25.56			25.56	2		30	0.015	155.11	0.05%	684.36	684.36	0.00	2.60	0.00	0.11	0.50	0.00	0.10	1.70	FALSE	684.46	682.19	681.92	4.76%	687.46	Inlet on Main Line,Super Critical Flow
2	1+38.09	1+27.55	10.54			2.83				2.71	10.00	0.07	10.05	10.00	5.57	9.45	15.09	25.56			25.56	2		30	0.015	155.11	0.05%	684.25	684.26	2.60	2.60	0.11	0.11	0.35	0.04	0.10	0.00	FALSE	684.36	681.92	681.43	4.76%	688.01	Bend 45°
3	1+27.55	1+00.00	27.55			2.83				2.71	10.00	0.18	10.12	10.00	5.57	9.45	15.09	25.56			25.56	2		30	0.015	155.11	0.05%	684.14	684.15	2.60	2.60	0.11	0.11	0.10	0.01	0.10	0.00	FALSE	684.25	681.43	680.07	4.76%	687.46	Bend 11.25°
SD-D																**100**		**100**																									
1	4+30.22	3+76.24	53.98	B3 & B4	0.44	0.44	0.85	1.25	0.44	0.44	10.00	0.27	10.00	10.00	5.57	9.45	2.45	4.16			4.16	1		15	0.013	4.57	0.41%	687.30	687.52	0.00	3.39	0.00	0.18	1.25	0.00	0.22	1.30	FALSE	687.74	685.08	684.81	0.50%	688.33	Inlet or Manhole at Beginning of Line
2	3+76.24	3+54.73	21.51			0.44				0.44	10.00	0.11	10.27	10.00	5.57	9.45	2.45	4.16			4.16	1		15	0.013	4.57	0.41%	687.11	687.20	3.39	3.39	0.18	0.18	0.35	0.06	0.10	0.00	FALSE	687.30	684.81	684.70	0.50%	689.48	Bend 45°
3	3+54.73	2+46.85	107.88			0.44				0.44	10.00	0.53	10.38	10.00	5.57	9.45	2.45	4.16			4.16	1		15	0.013	4.57	0.41%	686.56	687.01	3.39	3.39	0.18	0.18	0.35	0.06	0.10	0.00	FALSE	687.11	684.70	684.16	0.50%	689.77	Bend 45°
4	2+46.85	2+22.37	24.48	B5&B6	0.35	0.79	0.85	1.25	0.35	0.79	10.00	0.07	10.91	10.91	5.38	9.11	4.25	7.20			7.20	1		15	0.013	4.57	1.24%	685.86	686.16	3.39	5.87	0.18	0.54	0.75	0.14	0.40	0.00	FALSE	686.56	684.16	684.04	0.50%	688.46	45° Wye Connection or Cut-in
5	2+22.37	1+71.08	51.29			0.79				0.79	10.00	0.15	10.98	10.91	5.38	9.11	4.25	7.20			7.20	1		15	0.013	4.57	1.24%	685.03	685.67	5.87	5.87	0.54	0.54	0.35	0.19	0.19	0.00	FALSE	685.86	684.04	683.78	0.50%	688.23	Bend 45°
6	1+71.08	1+41.19	29.89			0.79				0.79	10.00	0.12	11.13	10.91	5.38	9.11	4.25	7.20			7.20	1		18	0.013	7.43	0.47%	684.67	684.81	5.87	4.07	0.54	0.26	0.35	0.19	0.10	0.00	FALSE	684.91	683.53	683.38	0.50%	688.23	Bend 45°
7	1+41.19	1+00.00	41.19			0.79				0.79	10.00	0.17	11.25	10.91	5.38	9.11	4.25	7.20			7.20	1		18	0.013	7.43	0.47%	684.14	684.57	4.07	4.07	0.26	0.26	0.35	0.09	0.10	0.00	FALSE	684.67	683.38	683.18	0.50%	688.21	Bend 45°
SD-D1																**100**		**100**																									
1	1+15.72	1+00.00	15.72	B6	0.13	0.13	0.85	1.25	0.13	0.13	10.00	0.12	10.00	10.00	5.57	9.45	0.72	1.23			1.23	1		10	0.013	4.15	0.32%	686.56	686.61	0.00	2.26	0.00	0.08	1.25	0.00	0.10	0.74	FALSE	686.71	684.72	684.16	3.58%	687.39	Inlet or Manhole at Beginning of Line

Curb Inlet and Drop Inlet in Sump

Inlet No.	Area No.	Area (acres)	100-year Flow (cfs)	100-year Carryover Flow (cfs)	100 Crown Overtop (cfs)	100 Total Gutter Flow Qo (cfs)	5-year Flow (cfs)	5-year Carryover Flow (cfs)	5 Crown Overtop (cfs)	5 Total Gutter Flow Qo (cfs)	Max Depth of Gutter Flow Yo (ft.)	100-year Actual Depth of Gutter Flow Yo (ft.)	5-year Actual Depth of Gutter Flow Yo (ft.)	Depth of Depression (ft.)	Depth of Flow at Opening Y (ft.)	Capacity of Inlet Per Foot of Length Q/L (cfs/ft.)	Length of Inlet Opening L or P (ft)	Clogging (%)	Max Depth Capacity of Inlet Q (cfs)	100 Carry Over Into OverFlow (cfs)	100- year Percent Q Captured By Inlet	5-year Carry Over Into OverFlow (cfs)	5- year Percent Q Captured By Inlet	Notes
1	*2*	*3*	*4*	*5*	*6*	*7*	*8*	*9*	*10*	*11*	*12*	*13*	*14*	*15*	*16*	*17*	*18*	*19*	*20*	*21*	*22*	*23*	*24*	*25*
C1	B2	0.22	2.08			2.08				0.00	0.28	0.24	0.00		0.24	0.44	5	0	2.22	0	100	0	100	

Landscape Drain Sizing

Area No.	No. of Inlets	Q100 (cfs)	Design Head (ft.)	Clogging (%)	Inlet Size (in.)	Max Capacity (cfs)	Percent Captured (%)	Notes
B4	1	1.70	1.27	50	15	4.32	100	DOME GRATE INLET
B5	1	2.08	0.72	50	18	4.81	100	DOME GRATE INLET

THE RESERVES AT MAGNOLIA
DENTON, TEXAS

HYDRAULIC CALCULATIONS

mma
civil engineering surveying landscape architecture planning
tbpels registration number: f – 2759
tbpels registration/license number: 10088000
519 east border
arlington, texas 76010
817-469-1671
fax: 817-274-8757
www.mmatexas.com

5/16/2023
STATE OF TEXAS
ROBERT J. CRONIN JR.
122288
LICENSED PROFESSIONAL ENGINEER

PROJECT NUMBER:	3597-00-02
PROJECT MANAGER:	R. CRONIN
DRAWN BY:	G. SANCHEZ
CHECKED BY:	A. TAYLOR
ISSUE DATE:	5/16/2023

REV.	DATE	DESCRIP.	BY

SHEET CONTENT:

HYDRAULIC CALCULATIONS

SHEET NO:

C8.3

COPYRIGHT © 2023 MMA, INC.

PLOTTED BY: ISIS HERNANDEZ DATE: 5/16/2023 11:35 AM PATH: P:\3597-00-02\700 Land Development\700 Construction Documents\Design\Plot Sheets\DRAINAGE AREA MAP.dwg

THE RESERVES AT MAGNOLIA
DENTON, TEXAS

STORM PLAN

20 0 10 20 40

1 inch = 20 ft.

LEGEND:

- PROPOSED STORM DRAIN
- PROPOSED CURB INLET
- PROPOSED LANDSCAPE DRAIN
- 6" HDPE ROOF DRAIN CONNECTION @ 2% MINIMUM, IN CASES WHERE 2% CANNOT BE ACHIEVED, 8" @ 1% MINIMUM MUST BE INSTALLED

NOTES:

1. ALL MATERIALS AND WORKMANSHIIP SHALL CONFORM TO THE CITY OF DENTON STANDARD DETAILS AND SPECIFICATIONS.
2. REFER TO SHEETS C11.7–C11.8 FOR DETAILS.
3. ALL PIPE SHALL BE HDPE ADS–N12 OR APPROVED EQUAL UNLESS OTHERWISE STATED.
4. ALL WYE, BENDS, REDUCERS AND PIPE TO BE PREFABRICATED.
5. REFER TO SHEET C1.0 FOR GENERAL NOTES.
6. REFER TO SHEET C8.5 FOR STORM PROFILES
7. DETENTION POND TO BE MAINTAINED BY THE PROPERTY OWNER.

125'x60' TRACT OF LAND
THOMAS B. PRALLE & WIFE, MYRA K. PRALLE
DOC. No. 1994–83917
DRDCT

CALLED 0.173 ACRES
TOMAS MARQUEZ AND WIFE, MARIA R. MARQUEZ
DOC. No. 1996–50468
OPRDCT

CALLED 0.17 ACRES
RODNEY EVANS
DOC. No. 2016–116951
OPRDCT

CALLED 0.172 ACRES
CASON CLAYTON CAGLE & AMANDA MARIE CAGLE
DOC. No. 2011–28732
OPRDCT

SOUTH PARK ADDITION
CAB. A, SLIDE 197
PRDCT

WILLOWWOOD ST.
ASPHALT W/ CURB & GUTTER

JACQUELINE DR

TAYLOR PARK SUBDIVISION
CAB. A, SLIDE 54
PRDCT

LOT 16, PARTS OF LOT 15 & 17BLOCK D
BARNES W.J. ADDITION
VOL. 2 PG. 65
PRDCT

LOT 12, BLOCK C
WYLIE H. BARNES ADDITION
VOL., 2, PG. 65
PRDCT

LOT 8R BLOCK C
BARNES ADDITION
DOC. No. 2014–271
OPRDCT

380 NORTH LLC
DOC. No. 2021–207318
OPRDCT

STA 4+30.22 SD–D
INSTALL NYLOPLAST 15" DRAIN BASIN WITH DOME GRATE INLET
THROAT = 688.33
DEPTH = 3.25
FL 15" OUT = 685.08 S
N 7122269.58
E 2383718.91

STA 3+76.24 SD–D
INSTALL 18" 45° BEND
FL 15" IN = 684.81 N
FL 15" OUT = 684.81 SW
N 7122215.59
E 2383718.91

TYPICAL ROOF DRAIN CONNECTION SEE LEGEND FOR DETAILS

SD–D 4+00
15" HDPE

STA 3+54.73 SD–D
INSTALL 18" 45° BEND
FL 15" IN = 684.70 NE
FL 15" OUT = 684.70 W
N 7122200.38
E 2383703.70

STA 1+27.77 SD–D
INSTALL 30" 15° BEND
FL 30" IN = 681.23 E
FL 30" OUT = 681.23 W
N 7122060.76
E 2383671.85

2–30" RCP CLASS III SD–C

15" HDPE SD–D 3+00

TYPICAL ROOF DRAIN CONNECTION SEE LEGEND FOR DETAILS

STA 2+46.85 SD–D
INSTALL 18" 45° BEND
FL 15" IN = 684.16 E
FL 10" IN = 684.16 NE
FL 15" OUT = 684.16 SW
N 7122200.38
E 2383595.82

10" HDPE SD–D1

STA 1+15.72 SD–D1
INSTALL NYLOPLAST 18" DRAIN BASIN WITH DOME GRATE INLET
THROAT = 687.38
DEPTH = 2.66
FL 10" OUT = 684.72 SW
N 7122211.48
E 2383606.95

2+00

STA 2+22.37 SD–D
INSTALL 18" 45° BEND
FL 15" IN = 684.04 NE
FL 15" OUT = 684.04 S
N 7122183.07
E 2383578.51

STA 1+71.08 SD–D
INSTALL 18" 45° BEND & 18"x15" REDUCER
FL 15" IN = 683.78 N
FL 18" OUT = 683.53 SE
N 7122131.78
E 2383578.35

STA 1+41.19 SD–D
INSTALL 18" 45° BEND
FL 18" IN = 683.38 NW
FL 18" OUT = 683.38 S
N 7122110.64
E 2383599.49

STA 1+00.00 SD–D
DAYLIGHT PIPE THROUGH WALL
FL 18" IN = 683.18 N
N 7122069.46
E 2383599.49

SD–D 18" HDPE

VARIABLE WIDTH DRAINAGE EASEMENT

DETENTION POND

STA 1+45.20 SD–C
DAYLIGHT PIPE THROUGH WALL
FL 30" OUT = 682.04 NW
N 7122056.93
E 2383689.69

STA 1+45.20 SD–C
DAYLIGHT PIPE THROUGH WALL
FL 30" OUT = 682.19 NW
N 7122053.39
E 2383672.30

STA 1+27.55 SD–C
INSTALL 30" 15° BEND
FL 30" IN = 681.43 E
FL 30" OUT = 681.43 W
N 7122057.16
E 2383672.30

STA 1+08.00 SD–B
INSTALL 5' TYPE 2 CURB INLET
TC = 686.30
DEPTH = 4.02
N 7122005.08
E 2383653.41

STA 1+00.00 SD–C
DAYLIGHT PIPE THROUGH WALL
FL 30" IN = 680.07 E
N 7122050.37
E 2383645.60

STA 1+00.00 SD–C
DAYLIGHT PIPE THROUGH WALL
FL 30" IN = 680.07 E
N 7122053.87
E 2383644.71

12" HDPE SD–B

STA 1+00.00 SD–B
DAYLIGHT PIPE THROUGH WALL
FL 12" IN = 682.00 E
N 7122005.20
E 2383645.41

STA 1+59.05 SD–A
DAYLIGHT PIPE THROUGH WALL
FL 18" OUT = 678.16 S
N 7121945.50
E 2383610.78

PRIVATE 18" RCP CLASS III SD–A

STA 1+49.97 SD–A
INSTALL 4'x4' SQ SDMH END PRIVATE & BEGIN PUBLIC STORM
RIM = 686.44
FL 18" IN = 678.02 N
FL 18" OUT = 678.02 S
N 7121936.42
E 2383610.80

SD–A

PUBLIC 18" RCP CLASS III

APPROXIMATE CENTERLINE

14.5' R.O.W. DEDICATION

STA 1+00.00 SD–A
CONNECT TO CONNECT TO EX 4'x4' SQ SDMH
CONTRACTOR TO FIELD VERIFY FLOWLINE
RIM = 685.11
FL 18" IN = 677.22 N
FL EX 18" OUT = 677.22 W
N 7121886.45
E 2383610.91

EXISTING 10' CURB INLET

CONTRACTOR SHALL FIELD VERIFY EXISTING FLOWLINE PRIOR TO ANY CONSTRUCTION. NOTIFY ENGINEER OF ANY CONFLICTS.

15' SETBACK
16' DME ESMT
10' SETBACK
20' SETBACK
UGE
6" FW
4" W
6" SS
EX-8" W
EX-6" SS
PP

GENERAL UTILITY NOTES:

ALL EXISTING UTILITY DATA IS PROVIDED FOR INFORMATION ONLY. ALTHOUGH THIS DATA IS SHOWN AS ACCURATELY AS POSSIBLE, THE CONTRACTOR IS CAUTIONED THAT THE OWNER AND THE ENGINEER NEITHER ASSUME NOR IMPLY ANY RESPONSIBILITY FOR THE ACCURACY OF THIS DATA. IT SHALL BE THE CONTRACTOR'S RESPONSIBILITY TO CONTACT THE UTILITY AFFECTED AND VERIFY THESE LOCATIONS AND ELEVATIONS PRIOR TO CONSTRUCTION.

CALL TEXAS 811 OR OTHER UTILITY LOCATING SERVICES 48 HOURS PRIOR TO CONSTRUCTION ACTIVITY. MMA, INC. IS NOT RESPONSIBLE FOR KNOWING ALL EXISTING UTILITIES OR DEPICTING EXACT LOCATIONS OF UTILITIES ON DRAWINGS.

811 Know what's below. Call before you dig.

SOURCE BENCHMARK:

CITY OF DENTON MONUMENT #2011 – 3.5" ALUMINUM CAP ON ROD "2011" LOCATED AT JUNCTION OF FRAME ROAD NORTH OF CONCRETE CREEK RUNNING PARALLEL WITH MCKINNEY APPROXIMATELY 37.7' FROM POWER POLE TO THE WEST
A: 611.24'
NAD83 TXNC (GRID)
N: 7128266.50'
E: 2389088.77'

SITE BENCHMARK:

BM #1 – "X" CUT IN SQUARE LOCATED ON THE NORTHWEST CORNER OF AN INLET OFF THE EAST BOUND SIDE OF WILLOWWOOD STREET AND APPROXIMATELY 42' WEST FROM THE CENTERLINE OF JACQUELINE DRIVE

ELEV: 686.09'
NAD83 TXNC (GRID)
N: 7120793.43'
E: 2383257.97'

BM #2 – "X" CUT IN SQUARE LOCATED APPROXIMATELY 272' EAST FROM THE CENTERLINE OF MERCEDES ROAD AT THE END OF OAKWOOD DRIVE ON THE SOUTH SIDE ON THE CURB APPROXIMATELY 50' WEST OF THE CHURCH

ELEV: 688.85'
NAD83 TXNC (GRID)
N: 7121272.19'
E: 2383152.20'

BEARINGS & COORDINATE VALUES SHOWN HEREON ARE IN REFERENCE TO THE NAD83 – TEXAS COORDINATE SYSTEM – NORTH CENTRAL ZONE, 4202, BASED ON GPS OBSERVATIONS UTILIZING THE LEICA GPS REFERENCE NETWORK. ALL DISTANCES SHOWN HEREON WERE ADJUSTED TO SURFACE USING A COMBINED SCALE FACTOR OF 1.0001526521 (0.999847371200), BASE POINT OF 0,0,0.

mma
civil engineering surveying landscape architecture planning
tbpels registration number: f – 2759
tbpels registration/license number: 10088000
519 east border
arlington, texas 76010
817–469–1671
fax: 817–274–8757
www.mmatexas.com

5/16/2023

STATE OF TEXAS · ROBERT J. CRONIN JR. · 122288 · LICENSED PROFESSIONAL ENGINEER

PROJECT NUMBER:	3597–00–02
PROJECT MANAGER:	R. CRONIN
DRAWN BY:	G. SANCHEZ
CHECKED BY:	A. TAYLOR
ISSUE DATE:	5/16/2023

REV.	DATE	DESCRIP.	BY

SHEET CONTENT:

STORM PLAN

SHEET NO:

C8.4

COPYRIGHT © 2023 MMA, INC.

PLOTTED BY: ISIS HERNANDEZ DATE: 5/16/2023 11:39 AM PATH: P:\3597-00-02\700 Land Development\703 Construction Documents\Design\Plot Sheets\STORM DRAIN PLAN.dwg

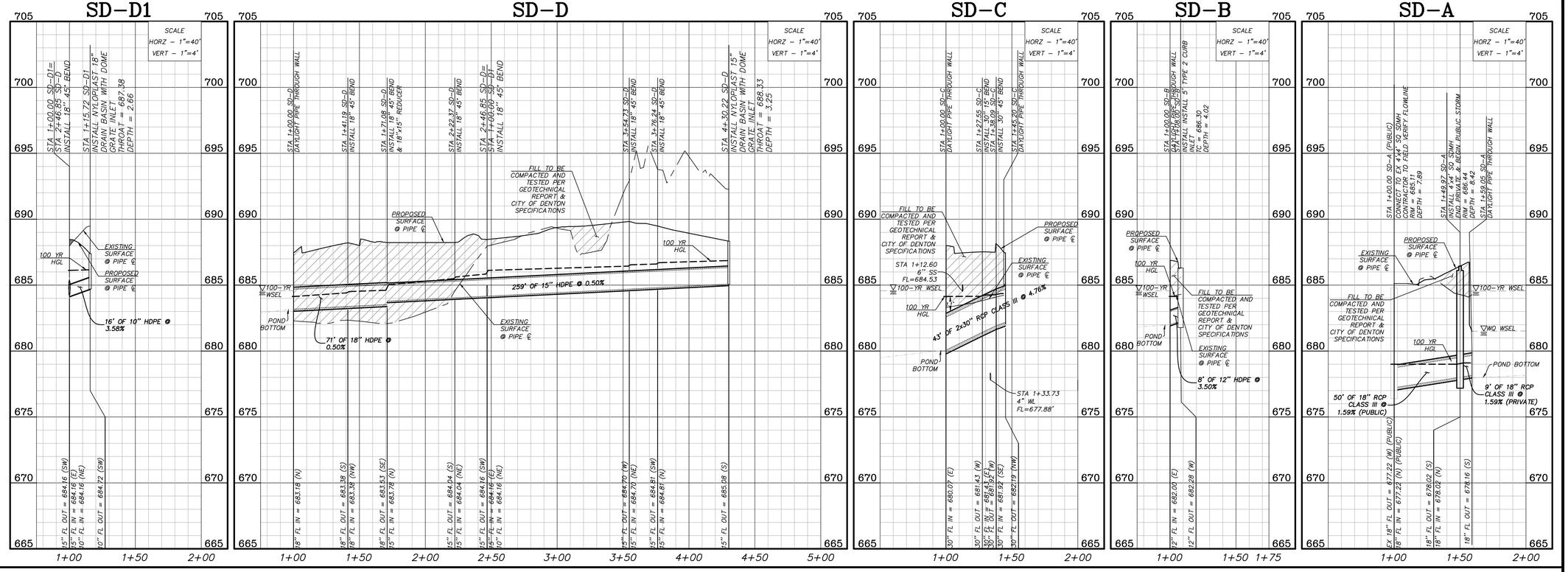

THE RESERVES AT MAGNOLIA
DENTON, TEXAS

STORM PROFILES

m|m|a
civil engineering surveying landscape architecture planning
tbpels registration number: f - 2759
tbpels registration/license number: 10088000
519 east border
arlington, texas 76010
817-469-1671
fax: 817-274-8757
www.mmatexas.com

5/16/2023

STATE OF TEXAS
ROBERT J. CRONIN JR.
122288
LICENSED PROFESSIONAL ENGINEER

PROJECT NUMBER:	3597-00-02
PROJECT MANAGER:	R. CRONIN
DRAWN BY:	G. SANCHEZ
CHECKED BY:	A. TAYLOR
ISSUE DATE:	5/16/2023

REV.	DATE	DESCRIP.	BY

SHEET CONTENT:

STORM PROFILES

SHEET NO:

C8.5

COPYRIGHT © 2023 MMA, INC.

PLOTTED BY: IRIS HERNANDEZ DATE: 5/16/2023 11:36 AM PATH: P:\3597-00-02\700 Land Development\703 Construction Documents\Design\Plot Sheets\STORM DRAIN PLAN.dwg

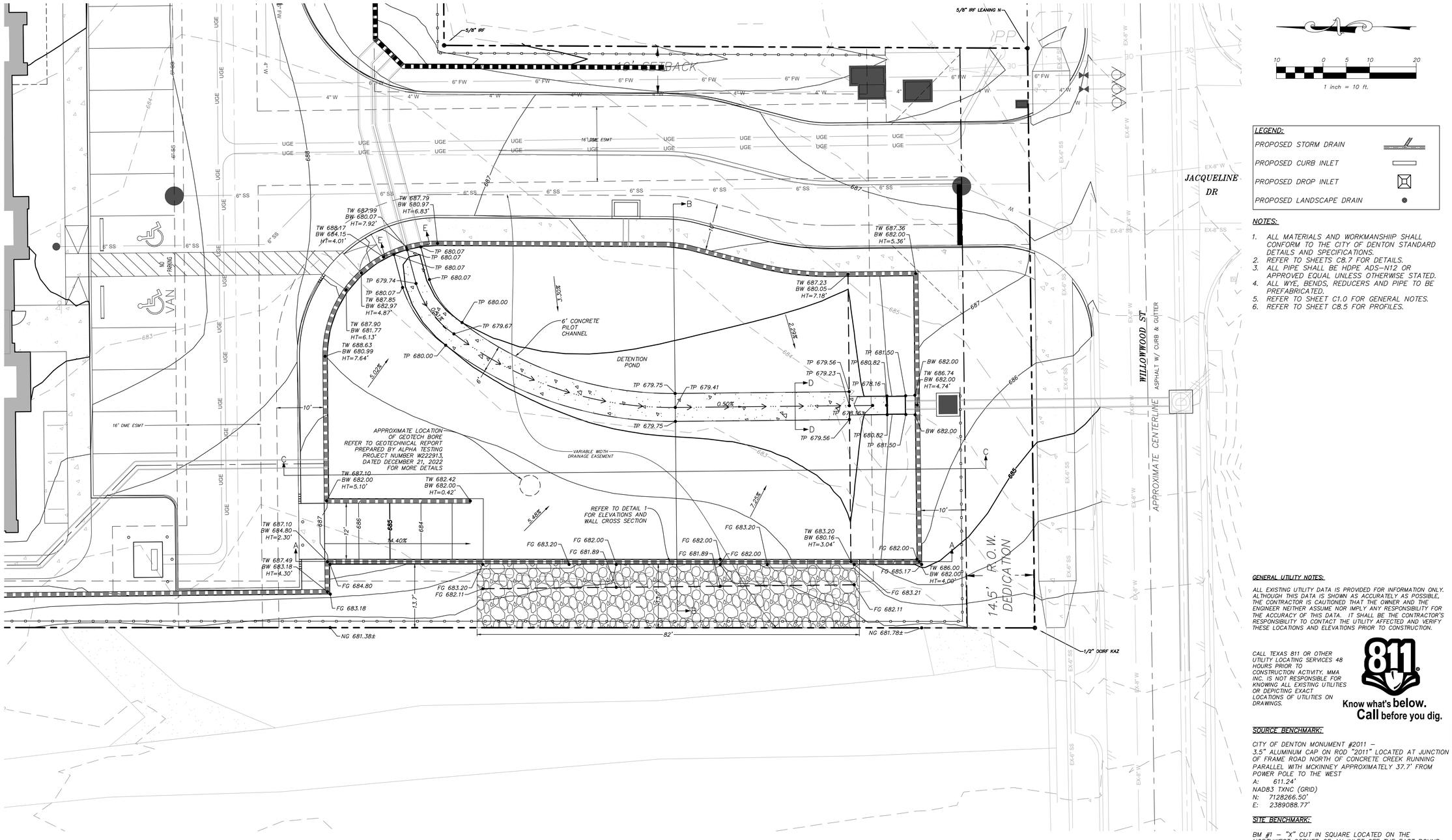

10 0 5 10 20

1 inch = 10 ft.

LEGEND:

- PROPOSED STORM DRAIN
- PROPOSED CURB INLET
- PROPOSED DROP INLET
- PROPOSED LANDSCAPE DRAIN

NOTES:

1. ALL MATERIALS AND WORKMANSHIIP SHALL CONFORM TO THE CITY OF DENTON STANDARD DETAILS AND SPECIFICATIONS.
2. REFER TO SHEETS C8.7 FOR DETAILS.
3. ALL PIPE SHALL BE HDPE ADS-N12 OR APPROVED EQUAL UNLESS OTHERWISE STATED.
4. ALL WYE, BENDS, REDUCERS AND PIPE TO BE PREFABRICATED.
5. REFER TO SHEET C1.0 FOR GENERAL NOTES.
6. REFER TO SHEET C8.5 FOR PROFILES.

GENERAL UTILITY NOTES:

ALL EXISTING UTILITY DATA IS PROVIDED FOR INFORMATION ONLY. ALTHOUGH THIS DATA IS SHOWN AS ACCURATELY AS POSSIBLE, THE CONTRACTOR IS CAUTIONED THAT THE OWNER AND THE ENGINEER NEITHER ASSUME NOR IMPLY ANY RESPONSIBILITY FOR THE ACCURACY OF THIS DATA. IT SHALL BE THE CONTRACTOR'S RESPONSIBILITY TO CONTACT THE UTILITY AFFECTED AND VERIFY THESE LOCATIONS AND ELEVATIONS PRIOR TO CONSTRUCTION.

CALL TEXAS 811 OR OTHER UTILITY LOCATING SERVICES 48 HOURS PRIOR TO CONSTRUCTION ACTIVITY. MMA INC. IS NOT RESPONSIBLE FOR KNOWING ALL EXISTING UTILITIES OR DEPICTING EXACT LOCATIONS OF UTILITIES ON DRAWINGS.

811 Know what's below. Call before you dig.

SOURCE BENCHMARK:

CITY OF DENTON MONUMENT #2011 – 3.5" ALUMINUM CAP ON ROD "2011" LOCATED AT JUNCTION OF FRAME ROAD NORTH OF CONCRETE CREEK RUNNING PARALLEL WITH MCKINNEY APPROXIMATELY 37.7' FROM POWER POLE TO THE WEST
A: 611.24'
NAD83 TXNC (GRID)
N: 7128266.50'
E: 2389088.77'

SITE BENCHMARK:

BM #1 – "X" CUT IN SQUARE LOCATED ON THE NORTHWEST CORNER OF AN INLET OFF THE EAST BOUND SIDE OF WILLOWWOOD STREET AND APPROXIMATELY 42' WEST FROM THE CENTERLINE OF JACQUELINE DRIVE

ELEV: 686.09'
NAD83 TXNC (GRID)
N: 7120793.43'
E: 2383257.97'

BM #2 – "X" CUT IN SQUARE LOCATED APPROXIMATELY 272' EAST FROM THE CENTERLINE OF MERCEDES ROAD AT THE END OF OAKWOOD DRIVE ON THE SOUTH SIDE ON THE CURB APPROXIMATELY 50' WEST OF THE CHURCH

ELEV: 688.85'
NAD83 TXNC (GRID)
N: 7121272.19'
E: 2383152.20'

BEARINGS & COORDINATE VALUES SHOWN HEREON ARE IN REFERENCE TO THE NAD83 – TEXAS COORDINATE SYSTEM – NORTH CENTRAL ZONE, 4202, BASED ON GPS OBSERVATIONS UTILIZING THE LEICA GPS REFERENCE NETWORK. ALL DISTANCES SHOWN HEREON WERE ADJUSTED TO SURFACE USING A COMBINED SCALE FACTOR OF 1.0001526521 (0.999847371200), BASE POINT OF 0,0,0.

THE RESERVES AT MAGNOLIA
DENTON, TEXAS

POND PLAN

mma
civil engineering surveying landscape architecture planning
tbpels registration number: f – 2759
tbpels registration/license number: 10088000
519 east border
arlington, texas 76010
817-469-1671
fax: 817-274-8757
www.mmatexas.com

5/16/2023

STATE OF TEXAS
ROBERT J. CRONIN JR.
122288
LICENSED PROFESSIONAL ENGINEER

PROJECT NUMBER:	3597-00-02
PROJECT MANAGER:	R. CRONIN
DRAWN BY:	G. SANCHEZ
CHECKED BY:	A. TAYLOR
ISSUE DATE:	5/16/2023

REV.	DATE	DESCRIP.	BY

SHEET CONTENT: POND PLAN

SHEET NO: C8.6

COPYRIGHT © 2023 MMA, INC.

PLOTTED BY: ISIS HERNANDEZ DATE: 5/16/2023 11:36 AM PATH: P:\3597-00-02\700 Land Development\Design\Plot Sheets\DETENTION POND DESIGN.dwg

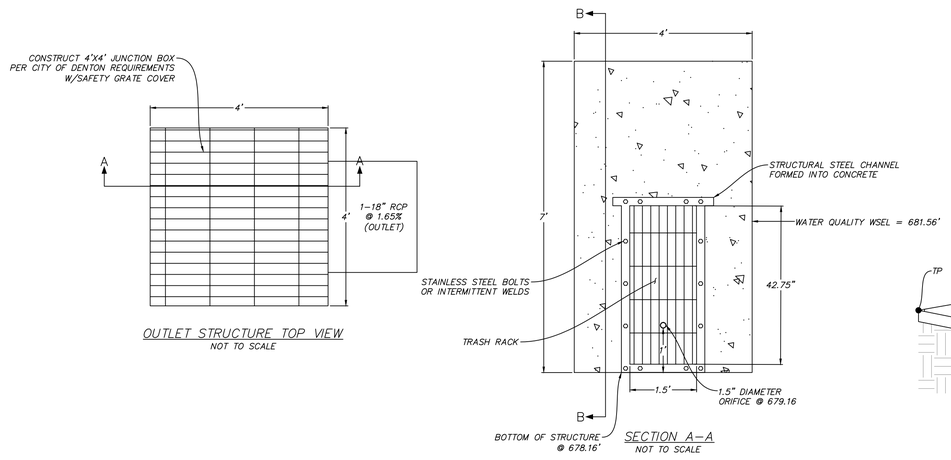

4 WATER QUALITY OUTLET STRUCTURE DETAIL
NOT TO SCALE

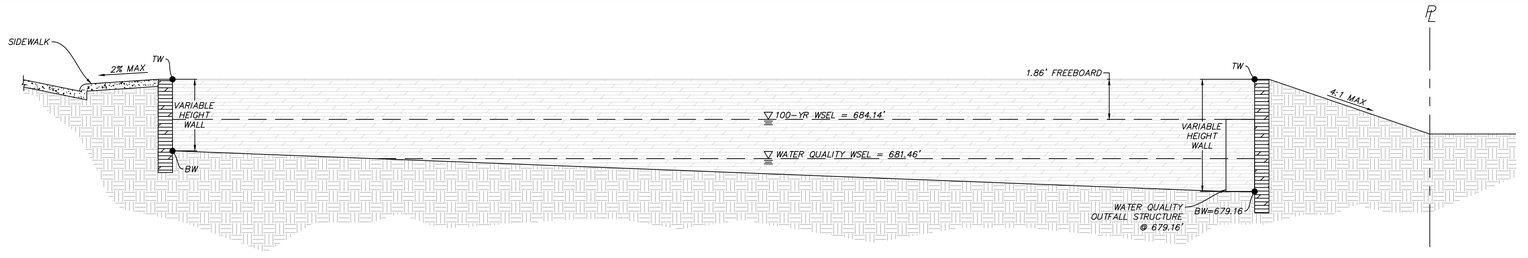

3 DETENTION POND SECTION C-C
NOT TO SCALE

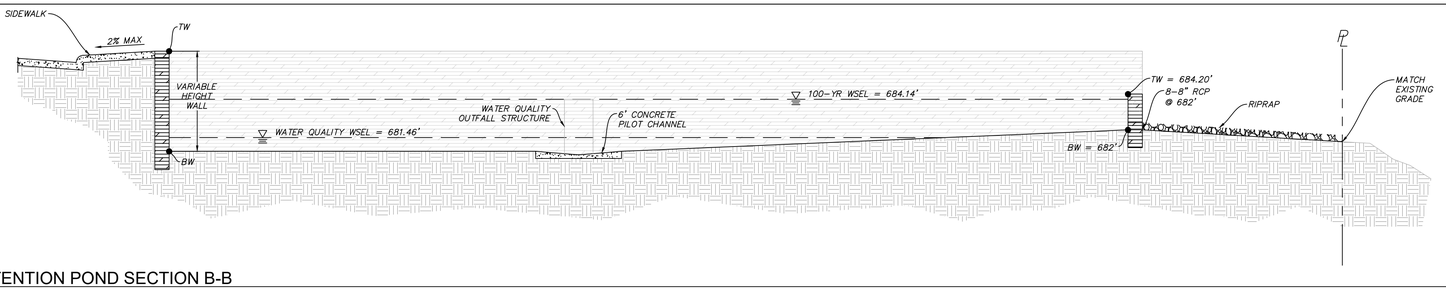

2 DETENTION POND SECTION B-B
NOT TO SCALE

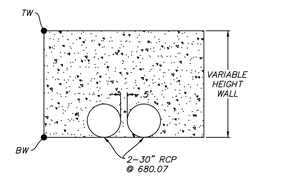

6 POND CULVERTS SECTION E-E
NOT TO SCALE

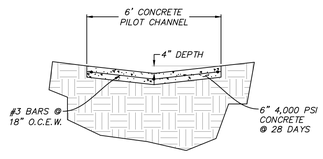

5 CONCRETE PILOT CHANNEL SECTION D-D
NOT TO SCALE

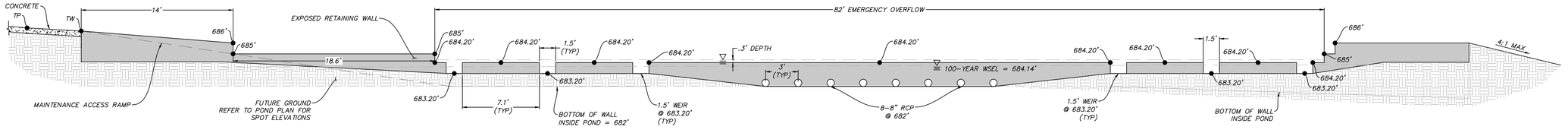

1 POND OUTFALL SECTION A-A
NOT TO SCALE

THE RESERVES AT MAGNOLIA
DENTON, TEXAS

POND DETAILS

mma
civil engineering surveying landscape architecture planning
tbpels registration number: f - 2759
tbpels registration/license number: 10088000
519 east border
arlington, texas 76010
817-469-1671
fax: 817-274-8757
www.mmatexas.com

5/16/2023

STATE OF TEXAS
ROBERT J. CRONIN JR.
122288
LICENSED PROFESSIONAL ENGINEER

PROJECT NUMBER:	3597-00-02
PROJECT MANAGER:	R. CRONIN
DRAWN BY:	G. SANCHEZ
CHECKED BY:	A. TAYLOR
ISSUE DATE:	5/16/2023

REV.	DATE	DESCRIP.	BY

SHEET CONTENT:
POND DETAILS

SHEET NO:
C8.7

COPYRIGHT © 2023 MMA, INC.

PLOTTED BY: ISIS HERNANDEZ DATE: 5/16/2023 11:36 AM PATH: P:\3597-00-02\700 Land Development\703 Construction Documents\Design\Plot Sheets\DETENTION POND DES(X).dwg

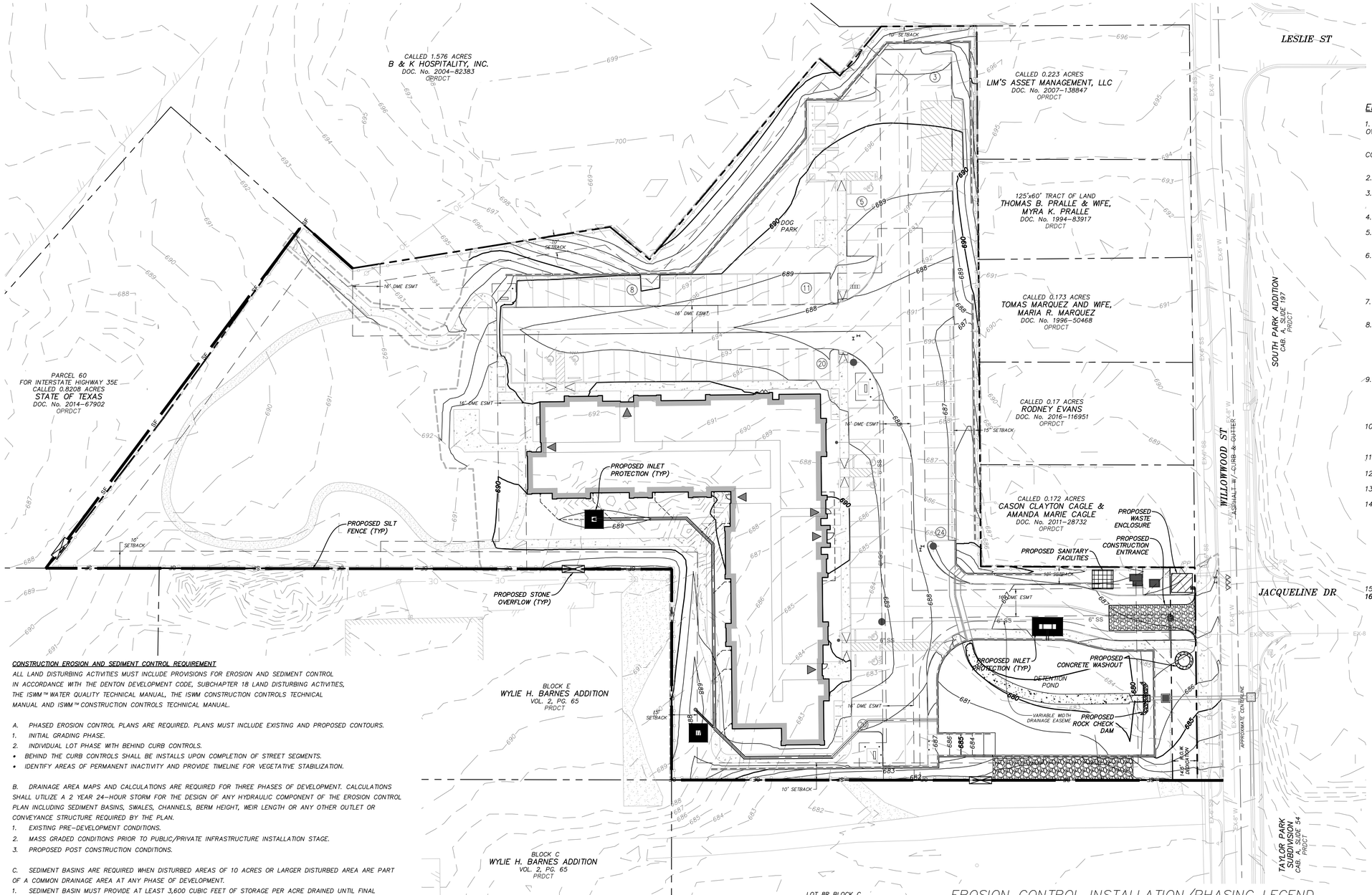

EROSION CONTROL NOTES

1. OWNER: JONES GILLAM RENZ ARCHITECTS
730 N NINTH STREET
SALINA, KANSAS 67401
CONTACT: MAGGIE GILLAM
TEL: 785-827-0386
EMAIL: mgillam@jgrarchitects.com
2. PERIMETER EROSION CONTROL MEASURES MUST BE IN PLACE BEFORE STARTING ANY SOIL DISTURBING ACTIVITIES.
3. STREET EXCAVATION TO BE PERFORMED AND EROSION CONTROL MEASURES IN PLACE BEFORE GRUBBING/LOT GRADING.
4. SEDIMENT DISCHARGED OR TRACKED ON TO EXISTING PAVEMENT SHALL BE REMOVED DAILY.
5. CONTRACTOR IS TO CONTAIN ALL RUNOFF FROM MATERIALS USED IN THE SUBGRADE STABILIZATION PROCESS.
6. RETAIN FLOATABLE AND WIND BLOWN MATERIALS ON SITE BY STORING ALL TRASH AND BUILDING MATERIAL WASTE IN ENCLOSURES UNTIL PROPER DISPOSAL AT OFF-SITE FACILITIES. CHECK ADJACENT AREAS DAILY AND PICK UP CONSTRUCTION WASTE MATERIALS AND DEBRIS THAT HAVE BLOWN OR WASHED OFF SITE.
7. PAVING CONTRACTOR TO INSTALL A PIT FOR TEMPORARY ON-SITE DISPOSAL OF CONCRETE WASTE FROM MIXING DRUMS AND CHUTES.
8. INSPECT POLLUTION CONTROL MEASURES EVERY TWO WEEKS AND WITHIN 24 HOURS AFTER A STORM EVENT OF 1/2" OR MORE. REPAIR OR REPLACE DAMAGED MEASURES TO RETAIN SEDIMENT AND OTHER POLLUTANTS ON SITE. REPEATED FAILURE OF A CONTROL MEASURE REQUIRES INSTALLATION OF A MORE SUITABLE DEVICE TO PREVENT DISCHARGE OF POLLUTANTS.
9. PERMANENTLY STABILIZE EXPOSED SOIL WITHIN AND ADJACENT TO THE SITE THAT IS DISTURBED BY VEHICLES, GRADING AND OTHER CONSTRUCTION ACTIVITIES. STABILIZATION IS OBTAINED WHEN THE SOIL IS COVERED BY A COMBINATION OF STRUCTURES, PAVING, AND PERENNIAL VEGETATION.
10. INSTALL A LIQUID TIGHT BERMED AREA (LINER REQUIRED), OR OTHER SPILL PROTECTION MEASURE PER THE FIRE CODE, FOR ANY TEMPORARY FUEL TANKS PLACED ON SITE DURING CONSTRUCTION.
11. ALL CONTRACTORS TO MAINTAIN EXISTING EROSION CONTROL MEASURES IN PLACE.
12. CONSTRUCTION ENTRANCE/EXIT TO BE LOCATED BY GRADING CONTRACTOR AND APPROVED BY OWNER.
13. ALL GRADING TO CONFORM TO THE APPROVED GRADING PLAN FOR THE RESERVES AT MAGNOLIA.
14. EROSION CONTROL MEASURES MAY ONLY BE PLACED IN FRONT OF INLETS OR IN CHANNELS, DRAINAGEWAYS OR BORROW DITCHES AT RISK OF CONTRACTOR. CONTRACTOR SHALL REMAIN LIABLE FOR ANY DAMAGE CAUSED BY THE MEASURES, INCLUDING FLOODING DAMAGE, WHICH MAY OCCUR DUE TO BLOCKED DRAINAGE. AT THE CONCLUSION OF ANY PROJECT, ALL CHANNELS, DRAINAGEWAYS AND BORROW DITCHES IN THE WORK ZONE SHALL BE DREDGED OF ANY SEDIMENT GENERATED BY THE PROJECT OR DEPOSITED AS A RESULT OF EROSION CONTROL MEASURES.
15. SEE LANDSCAPE PLAN FOR SOD LOCATIONS.
16. **TOTAL DISTURBED AREA = 2.60 AC.**

GENERAL UTILITY NOTES:

ALL EXISTING UTILITY DATA IS PROVIDED FOR INFORMATION ONLY. ALTHOUGH THIS DATA IS SHOWN AS ACCURATELY AS POSSIBLE, THE CONTRACTOR IS CAUTIONED THAT THE OWNER AND THE ENGINEER NEITHER ASSUME NOR IMPLY ANY RESPONSIBILITY FOR THE ACCURACY OF THIS DATA. IT SHALL BE THE CONTRACTOR'S RESPONSIBILITY TO CONTACT THE UTILITY AFFECTED AND VERIFY THESE LOCATIONS AND ELEVATIONS PRIOR TO CONSTRUCTION.

CALL TEXAS 811 OR OTHER UTILITY LOCATING SERVICES 48 HOURS PRIOR TO CONSTRUCTION ACTIVITY. MMA INC. IS NOT RESPONSIBLE FOR KNOWING ALL EXISTING UTILITIES OR DEPICTING EXACT LOCATIONS OF UTILITIES ON DRAWINGS.

811 Know what's below. Call before you dig.

SOURCE BENCHMARK:

CITY OF DENTON MONUMENT #2011 – 3.5" ALUMINUM CAP ON ROD "2011" LOCATED AT JUNCTION OF FRAME ROAD NORTH OF CONCRETE CREEK RUNNING PARALLEL WITH MCKINNEY APPROXIMATELY 37.7' FROM POWER POLE TO THE WEST
A: 611.24'
NAD83 TXNC (GRID)
N: 7128266.50'
E: 2389088.77'

SITE BENCHMARK:

BM #1 – "X" CUT IN SQUARE LOCATED ON THE NORTHWEST CORNER OF AN INLET OFF THE EAST BOUND SIDE OF WILLOWWOOD STREET AND APPROXIMATELY 42' WEST FROM THE CENTERLINE OF JACQUELINE DRIVE

ELEV: 686.09'
NAD83 TXNC (GRID)
N: 7120793.43'
E: 2383257.97'

BM #2 – "X" CUT IN SQUARE LOCATED APPROXIMATELY 272' EAST FROM THE CENTERLINE OF MERCEDES ROAD AT THE END OF OAKWOOD DRIVE ON THE SOUTH SIDE ON THE CURB APPROXIMATELY 50' WEST OF THE CHURCH

ELEV: 688.85'
NAD83 TXNC (GRID)
N: 7121272.19'
E: 2383152.20'

BEARINGS & COORDINATE VALUES SHOWN HEREON ARE IN REFERENCE TO THE NAD83 – TEXAS COORDINATE SYSTEM – NORTH CENTRAL ZONE, 4202, BASED ON GPS OBSERVATIONS UTILIZING THE LEICA GPS REFERENCE NETWORK. ALL DISTANCES SHOWN HEREON WERE ADJUSTED TO SURFACE USING A COMBINED SCALE FACTOR OF 1.0001526521 (0.999847371200). BASE POINT OF 0,0,0.

CONSTRUCTION EROSION AND SEDIMENT CONTROL REQUIREMENT

ALL LAND DISTURBING ACTIVITIES MUST INCLUDE PROVISIONS FOR EROSION AND SEDIMENT CONTROL IN ACCORDANCE WITH THE DENTON DEVELOPMENT CODE, SUBCHAPTER 18 LAND DISTURBING ACTIVITIES, THE ISWM™ WATER QUALITY TECHNICAL MANUAL, THE ISWM CONSTRUCTION CONTROLS TECHNICAL MANUAL AND ISWM™ CONSTRUCTION CONTROLS TECHNICAL MANUAL.

A. PHASED EROSION CONTROL PLANS ARE REQUIRED. PLANS MUST INCLUDE EXISTING AND PROPOSED CONTOURS.
1. INITIAL GRADING PHASE.
2. INDIVIDUAL LOT PHASE WITH BEHIND CURB CONTROLS.
- BEHIND THE CURB CONTROLS SHALL BE INSTALLS UPON COMPLETION OF STREET SEGMENTS.
- IDENTIFY AREAS OF PERMANENT INACTIVITY AND PROVIDE TIMELINE FOR VEGETATIVE STABILIZATION.

B. DRAINAGE AREA MAPS AND CALCULATIONS ARE REQUIRED FOR THREE PHASES OF DEVELOPMENT. CALCULATIONS SHALL UTILIZE A 2 YEAR 24-HOUR STORM FOR THE DESIGN OF ANY HYDRAULIC COMPONENT OF THE EROSION CONTROL PLAN INCLUDING SEDIMENT BASINS, SWALES, CHANNELS, BERM HEIGHT, WEIR LENGTH OR ANY OTHER OUTLET OR CONVEYANCE STRUCTURE REQUIRED BY THE PLAN.
1. EXISTING PRE-DEVELOPMENT CONDITIONS.
2. MASS GRADED CONDITIONS PRIOR TO PUBLIC/PRIVATE INFRASTRUCTURE INSTALLATION STAGE.
3. PROPOSED POST CONSTRUCTION CONDITIONS.

C. SEDIMENT BASINS ARE REQUIRED WHEN DISTURBED AREAS OF 10 ACRES OR LARGER DISTURBED AREA ARE PART OF A COMMON DRAINAGE AREA AT ANY PHASE OF DEVELOPMENT.
1. SEDIMENT BASIN MUST PROVIDE AT LEAST 3,600 CUBIC FEET OF STORAGE PER ACRE DRAINED UNTIL FINAL STABILIZATION OF THE SITE.
2. DECENTRALIZED TREATMENT SUCH AS SEDIMENT TRAPS MAY BE USED INSTEAD OF SEDIMENT BASINS WHERE THE CALCULATIONS ARE PROVIDED DEMONSTRATING EQUIVALENT VOLUME TREATMENT.

D. VEGETATIVE STABILIZATION IS REQUIRED FOR ALL PERMANENT AND TEMPORARY CHANNELS AND BASINS.

E. EROSION AND SEDIMENT CONTROL BEST MANAGEMENT PRACTICES (BMPS) DESIGN CRITERIA SHALL ADHERE TO THE MOST CURRENT VERSION OF THE ISWM™ CONSTRUCTION CONTROLS TECHNICAL MANUAL.
1. LINEAR PROJECTS MAY INSTEAD FOLLOW TXDOT STANDARDS.
2. PROPRIETARY EROSION OR SEDIMENT CONTROL DEVICES MAY BE UTILIZED WHEN:
- INDEPENDENT PERFORMANCE DATA IS PROVIDED TO PROVE A DEMONSTRATED CAPABILITY OF MEETING STORMWATER MANAGEMENT EFFICIENCY EQUIVALENT TO ISWM™ METHODS

SYSTEM OR DEVICE MUST BE APPROPRIATE FOR USE IN NORTH CENTRAL TEXAS CONDITIONS.

CONSTRUCTION EROSION AND SEDIMENT CONTROL REQUIREMENT

SECTION 4.0 OF THIS MANUAL IDENTIFIES THE TECHNICAL MANUALS THAT GOVERN THE DESIGN AND CONSTRUCTION OF STORMWATER DRAINAGE SYSTEMS. THE STORMWATER DESIGN CRITERIA MANUAL UTILIZES THE MOST CURRENT VERSION OF THE FOLLOWING FOUR TECHNICAL MANUALS PRODUCED BY THE NORTH CENTRAL TEXAS COUNCIL OF GOVERNMENTS (NCTCOG):
ISWM™ HYDROLOGY TECHNICAL MANUAL
ISWM™ HYDRAULICS TECHNICAL MANUAL
ISWM™ WATER QUALITY TECHNICAL MANUAL
ISWM™ CONSTRUCTION CONTROLS TECHNICAL MANUAL

EROSION CONTROL INSTALLATION/PHASING LEGEND

* CONSTRUCTION AND SUBSEQUENT EROSION CONTROL INSTALLATION MUST BE SEQUENCED AS WRITTEN BELOW.

MEASURE	BY	INSTALLED
CONST. ENTRY/EXIT	EXCAVATION CONTRACTOR	PRIOR TO EXCAVATION
INSTALL SILT FENCE	EXCAVATION CONTRACTOR	PRIOR TO EXCAVATION
INLET PROTECTION	UTILITY CONTRACTOR	IMMEDIATELY AFTER INLET CONSTRUCTION AND REMOVED AFTER ACCEPTANCE OF PUBLIC FACILITIES
CONCRETE TRUCK WASHOUT	GENERAL CONTRACTOR	PRIOR TO START OF CONSTRUCTION
WASTE ENCLOSURE	GENERAL CONTRACTOR	PRIOR TO START OF CONSTRUCTION
SANITARY FACILITIES	GENERAL CONTRACTOR	PRIOR TO START OF CONSTRUCTION
STONE OVERFLOW	EXCAVATION CONTRACTOR	PRIOR TO EXCAVATION ALONG SILT FENCE (PLACED AT EVERY 300' AND LOW POINTS)
ROCK CHECK DAM	EXCAVATION CONTRACTOR	IMMEDIATELY AFTER EXCAVATION

THE RESERVES AT MAGNOLIA
DENTON, TEXAS
EROSION CONTROL PLAN

mma
civil engineering surveying landscape architecture planning
tbpels registration number: f - 2759
tbpels registration/license number: 10088000
519 east border
arlington, texas 76010
817-469-1671
fax: 817-274-8757
www.mmatexas.com

5/16/2023
STATE OF TEXAS
ROBERT J. CRONIN JR.
122288
LICENSED
PROFESSIONAL ENGINEER

PROJECT NUMBER:	3597-00-02
PROJECT MANAGER:	R. CRONIN
DRAWN BY:	G. SANCHEZ
CHECKED BY:	A. TAYLOR
ISSUE DATE:	5/16/2023

REV.	DATE	DESCRIP.	BY

SHEET CONTENT: EROSION CONTROL PLAN

SHEET NO: C9.0

COPYRIGHT © 2023 MMA, INC.

PLOTTED BY: ISIS HERNANDEZ DATE: 5/16/2023 11:37 AM PATH: P:\3597-00-02\700 Land Development\703 Construction Documents\Design\Plat Sheets\EROSION CONTROL PLAN.dwg

NOTES:
FOR MORE INFORMATION REFER TO THE TXMUTCD MANUAL FOR DETAILS.

Notes for Figure 6H-11—Typical Application 11
Lane Closure on a Two-Lane Road with Low Traffic Volumes

Option:

1. This TTC zone application may be used as an alternate to the TTC application shown in Figure 6H-10 (using flaggers) when the following conditions exist:
   a. Vehicular traffic volume is such that sufficient gaps exist for vehicular traffic that must yield.
   b. Road users from both directions are able to see approaching vehicular traffic through and beyond the worksite and have sufficient visibility of approaching vehicles.
2. The Type B flashing warning lights may be placed on the ROAD WORK AHEAD and the ONE LANE ROAD AHEAD signs whenever a night lane closure is necessary.

Guidance:

3. The location of the yield bar should be selected using the same considerations as those applying to a flagger station (See section 6E.08, paragraphs 01-03).

Figure 6H-11. Lane Closure on a Two-Lane Road with Low Traffic Volumes (TA-11)

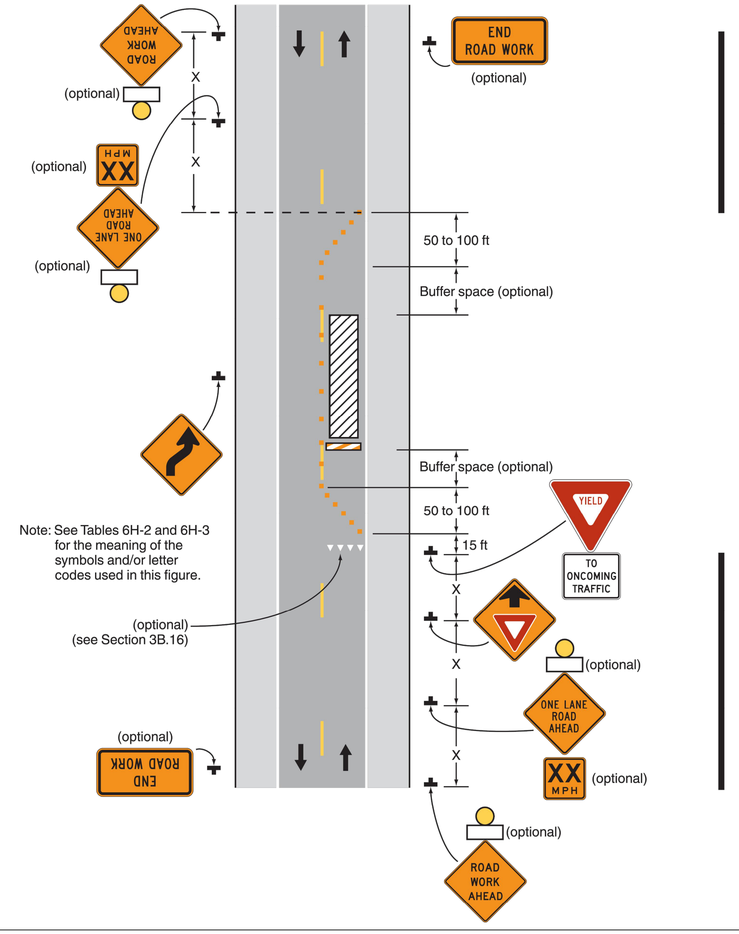

Table 6H-2. Meaning of Symbols on Typical Application Diagrams

Arrow board	Shadow vehicle
Arrow board support or trailer (shown facing down)	Sign (shown facing left)
Changeable message sign or support trailer	Surveyor
Channelizing device	Temporary barrier
Crash cushion	Temporary barrier with warning light
Direction of temporary traffic detour	Traffic or pedestrian signal
Direction of traffic	Truck-mounted attenuator
Flagger	Type 3 barricade
High-level warning device (Flag tree)	Warning light
Longitudinal channelizing device	Work space
Luminaire	Work vehicle
Pavement markings that should be removed for a long-term project	

THE RESERVES AT MAGNOLIA
DENTON, TEXAS

TRAFFIC CONTROL PLAN

mma
civil engineering surveying landscape architecture planning
tbpels registration number: f – 2759
tbpels registration/license number: 10088000
519 east border
arlington, texas 76010
817-469-1671
fax: 817-274-8757
www.mmatexas.com

5/16/2023
STATE OF TEXAS
ROBERT J. CRONIN JR.
122288
LICENSED
PROFESSIONAL ENGINEER

PROJECT NUMBER:	3597-00-02
PROJECT MANAGER:	R. CRONIN
DRAWN BY:	G. SANCHEZ
CHECKED BY:	A. TAYLOR
ISSUE DATE:	5/16/2023

REV.	DATE	DESCRIP.	BY

SHEET CONTENT:
TRAFFIC CONTROL PLAN

SHEET NO:
C10.0

COPYRIGHT © 2023 MMA, INC.

PLOTTED BY: ISIS HERNANDEZ DATE: 5/16/2023 11:37 AM PATH: P:\3597-00-02\700 Land Development\703 Construction Documents\Design\Plot Sheets\CONSTRUCTION DETAILS.dwg

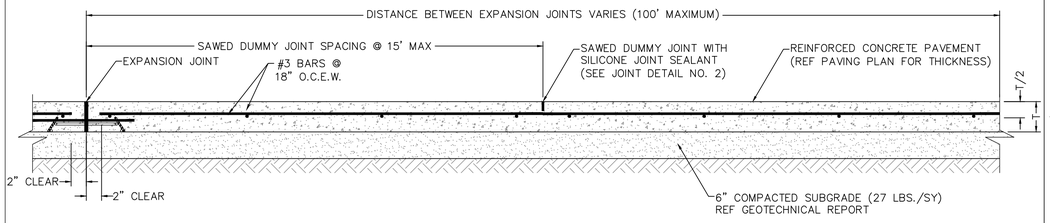

9 TYPICAL PAVING SECTION
NOT TO SCALE

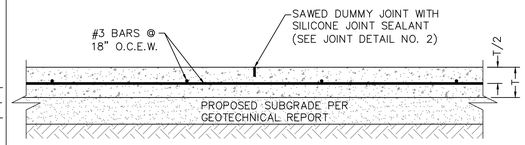

6 SAWED DUMMY JOINT
NOT TO SCALE

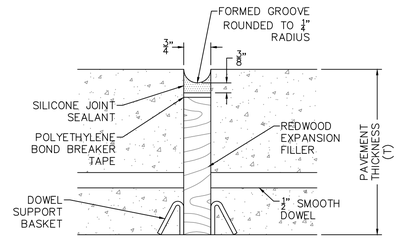

3 JOINT DETAIL NO. 1
NOT TO SCALE

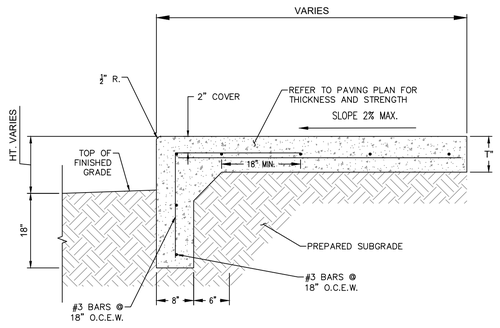

11 CONCRETE TURNDOWN EDGE DETAIL
NOT TO SCALE

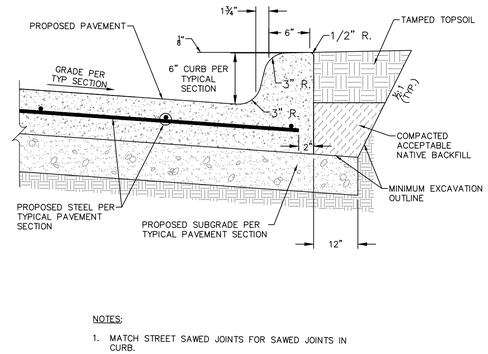

NOTES:

1. MATCH STREET SAWED JOINTS FOR SAWED JOINTS IN CURB.

8 STANDARD MONOLITHIC CURB
NOT TO SCALE

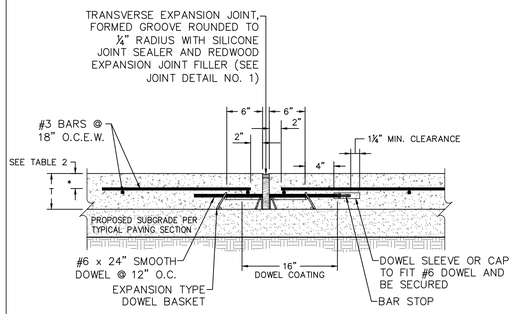

5 EXPANSION JOINT
NOT TO SCALE

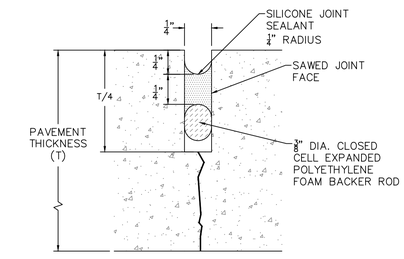

2 JOINT DETAIL NO. 2
NOT TO SCALE

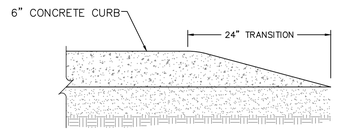

10 CURB TAPER
NOT TO SCALE

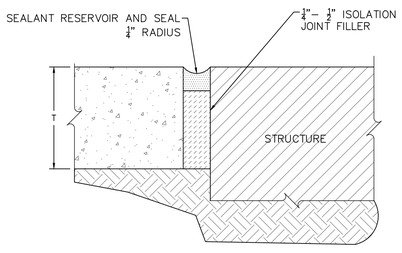

7 ISOLATION JOINT
NOT TO SCALE

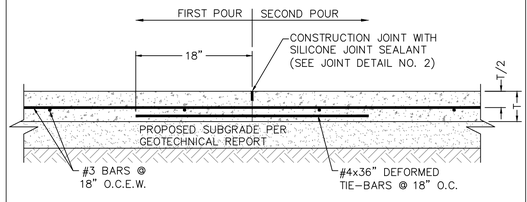

4 CONSTRUCTION JOINT
NOT TO SCALE

CONSTRUCTION NOTES

1. FOR DEFORMED BAR SPLICES, LAP BARS 40 DIAMETERS AND TIE.
2. FOR PAVEMENT THICKNESS "T" REFER TO PAVING PLAN.

TABLE 1
(SAWED DUMMY JOINT DEPTH)

DIM T = PAVEMENT THICKNESS	DIM T/4 = JOINT DEPTH
5"	1¼"
6"	1½"
7"	1¾"
8"	2"
9"	2¼"

TABLE 2
(PAVEMENT REINFORCING STEEL PLACEMENT)

DIM T = PAVEMENT THICKNESS	* (CLEARANCE FROM FACE OF CONCRETE)
5"	2"
6"	2"
7"	2½"
8"	2¾"
9"	3"

NOTE: ALL DOWELS TO BE PLACED AT T/2.

1 PAVING NOTES & TABLES
NOT TO SCALE

THE RESERVES AT MAGNOLIA
DENTON, TEXAS

PRIVATE PAVING DETAILS

mma
civil engineering surveying landscape architecture planning
tbpels registration number: f – 2759
tbpels registration/license number: 10088000
519 east border
arlington, texas 76010
817-469-1671
fax: 817-274-8757
www.mmatexas.com

5/16/2023
STATE OF TEXAS
ROBERT J. CRONIN JR.
122288
LICENSED PROFESSIONAL ENGINEER

PROJECT NUMBER:	3597-00-02
PROJECT MANAGER:	R. CRONIN
DRAWN BY:	G. SANCHEZ
CHECKED BY:	A. TAYLOR
ISSUE DATE:	5/16/2023

REV.	DATE	DESCRIP.	BY

SHEET CONTENT:

PRIVATE PAVING DETAILS

SHEET NO:

C11.0

COPYRIGHT © 2023 MMA, INC.

PLOTTED BY: ISIS HERNANDEZ DATE: 5/16/2023 11:37 AM PATH: P:\3597-00-02\700 Land Development\703 Construction Documents\Design\Pvt Sheets\CONSTRUCTION DETAILS.dwg

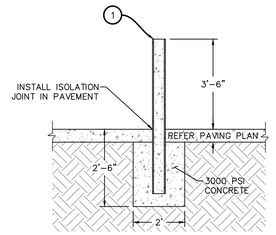

1 6"ø SCHEDULE 40 SMOOTH STEEL SEAMLESS PIPE FURNISHED & INSTALLED BY G.C., BOLLARDS TO BE PLUMB AND ALIGNED IN A STRAIGHT LINE. FILLED W/CONC. AND TOPS TO BE GROUND SMOOTH W/SQUARE EDGE, THEN PRIMED WITH "END RUST" BY DURO AND PAINTED WITH INDUSTRIAL OIL BASED ENAMEL. G.C. TO COORDINATE COLOR WITH OWNER'S REPRESENTATIVES.

5 TYPICAL BOLLARD DETAIL
NOT TO SCALE

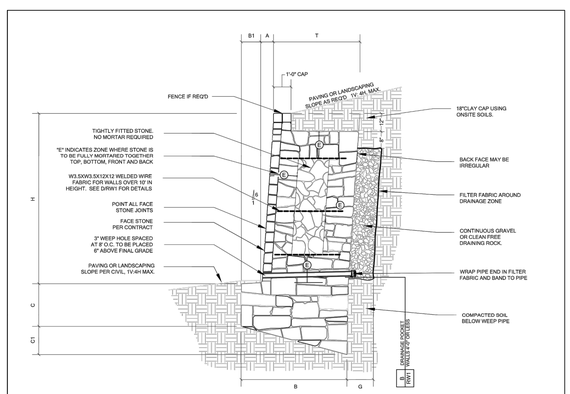

NOTES:
1. STRUCTURAL ENGINEER TO VERIFY ALL FINAL DESIGN.

RW1/1 MASONRY WALL SCHEDULE -2500 psf - 6V:1H BATTER

BEARING CAPACITY ON NATURAL SOIL OR COMPACTED AND TESTED FILLS

WALL HEIGHT	BASE WIDTH	TOE	BASE	BASE	BATTER	FULLY MORTARED ZONE	THICKNESS OF WALL	DRAINAGE ZONE THICKNESS	BEARING CAPACITY
H	B	B1	DEPTH (TOE) C	DEPTH (HEEL) C1	A	E	T	G	
1' - 0"	1' - 0"	0' - 0"	0' - 10"	0' - 2"	0' - 2"	FULLY	1' - 0"	SEE R/RW1	2500 psf
2' - 0"	1' - 3"	0' - 0"	1' - 0"	0' - 3"	0' - 4"	FULLY	1' - 3"	SEE R/RW1	
3' - 0"	1' - 10"	0' - 0"	1' - 0"	0' - 4"	0' - 6"	FULLY	1' - 10"	SEE R/RW1	
4' - 0"	2' - 2"	0' - 0"	1' - 3"	0' - 5"	0' - 8"	FULLY	2' - 2"	SEE R/RW1	
5' - 0"	2' - 8"	0' - 1"	1' - 5"	0' - 6"	0' - 10"	0' - 11"	2' - 7"	0' - 10"	
6' - 0"	3' - 2"	0' - 2"	1' - 8"	0' - 7"	1' - 0"	1' - 0"	3' - 0"	0' - 10"	
7' - 0"	3' - 9"	0' - 7"	2' - 0"	0' - 8"	1' - 2"	1' - 1"	3' - 2"	1' - 0"	
8' - 0"	4' - 8"	0' - 9"	2' - 3"	0' - 10"	1' - 4"	1' - 4"	3' - 11"	1' - 2"	
9' - 0"	5' - 6"	1' - 2"	2' - 8"	0' - 11"	1' - 6"	1' - 4"	4' - 4"	1' - 4"	
10' - 0"	6' - 3"	1' - 5"	3' - 0"	1' - 1"	1' - 8"	1' - 7"	4' - 10"	1' - 6"	
11' - 0"	7' - 1"	1' - 9"	3' - 3"	1' - 3"	1' - 10"	1' - 9"	5' - 4"	1' - 8"	
12' - 0"	7' - 8"	2' - 0"	3' - 6"	1' - 4"	2' - 0"	1' - 11"	5' - 8"	1' - 10"	
13' - 0"	8' - 3"	2' - 3"	3' - 9"	1' - 5"	2' - 2"	2' - 0"	6' - 0"	2' - 0"	

WALL DESIGN CRITERIA

BEARING	SLOPE TOP	SLOPE BOT	ACTIVE PRESSURE	PASSIVE PRESSURE	COEFFICIENT OF FRICTION	SLOPE OF BACK OF WALL	SURCHARGE
Q_a	β	β_1	Φ_a	Φ_p	α	q	
2500 psf	14.3 deg	14.3 deg	30 deg	30 deg	0.3	99.5 deg	0 psf

FOOTING DEPTHS MAY BE TERMINATED 12" INTO SOLID UNFRACTURED LIMESTONE CUT AT BASE OF RETAINING WALL, IF ENCOUNTERED

RW1/1 MASONRY WALL W/ 6V:1H BATTER
SCALE: N.T.S.

6 RETAINING WALL DETAIL
NOT TO SCALE

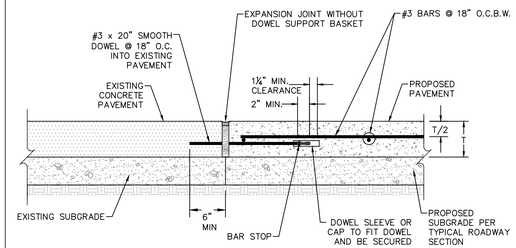

4 EXPANSION CONSTRUCTION JOINT (BETWEEN EXISTING AND PROPOSED PAVEMENT)
NOT TO SCALE

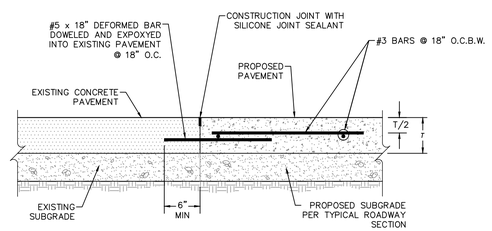

3 CONSTRUCTION JOINT (BETWEEN EXISTING AND PROPOSED PAVEMENT)
NOT TO SCALE

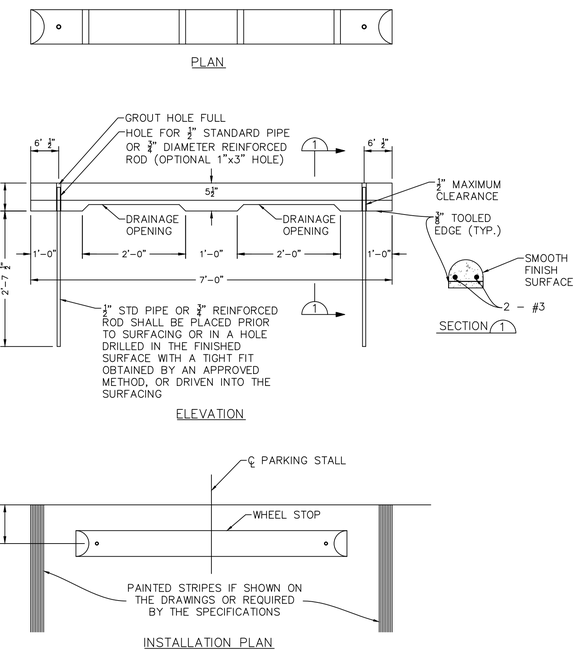

2 PRECAST CONCRETE WHEEL STOP DETAILS
NOT TO SCALE

INSTALLATION PLAN

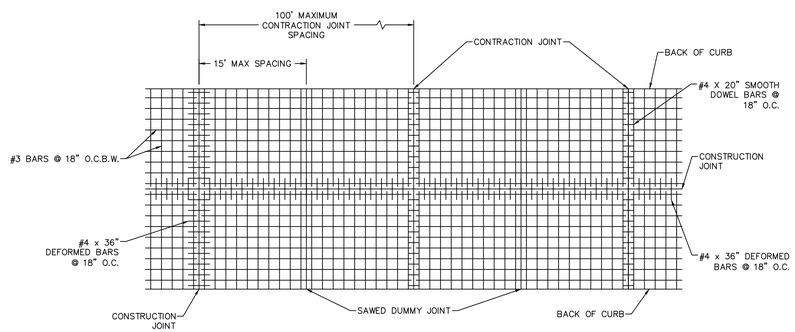

1 PAVEMENT STEEL REINFORCING GENERAL LAYOUT
NOT TO SCALE

THE RESERVES AT MAGNOLIA
DENTON, TEXAS

PRIVATE PAVING DETAILS

mma
civil engineering surveying landscape architecture planning
tbpels registration number: f – 2759
tbpels registration/license number: 10088000
519 east border
arlington, texas 76010
817-469-1671
fax: 817-274-8757
www.mmatexas.com

5/16/2023
STATE OF TEXAS
ROBERT J. CRONIN JR.
122288
LICENSED
PROFESSIONAL ENGINEER

PROJECT NUMBER:	3597-00-02
PROJECT MANAGER:	R. CRONIN
DRAWN BY:	G. SANCHEZ
CHECKED BY:	A. TAYLOR
ISSUE DATE:	5/16/2023

REV.	DATE	DESCRIP.	BY

SHEET CONTENT:

PRIVATE PAVING DETAILS

SHEET NO:

C11.1

COPYRIGHT © 2023 MMA, INC.

PLOTTED BY: ISIS HERNANDEZ DATE: 5/16/2023 11:37 AM PATH: P:\3597-00-02\700 Land Development\703 Construction Documents\Design\Pvt Sheets\CONSTRUCTION DETAILS.dwg

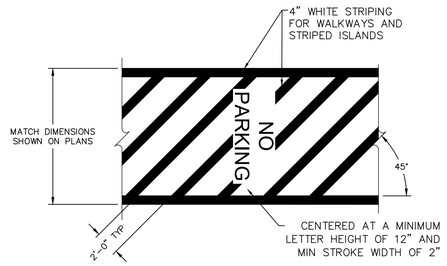

7 LOADING ZONE STRIPING DETAIL
NOT TO SCALE

NOTE:

1. SIGN AND INSTALLATION TO BE IN ACCORDANCE W/ALL ADA, STATE AND CITY CODES. CONTRACTOR SHALL VERITY COMPLIANCE WITH ALL CODES BEFORE FABRICATION.
2. THE HEIGHT OF THE PARKING SIGN REQUIRED BY TAS SECTION 502.6 IS 60" MINIMUM ABOVE THE PARKING SURFACE.

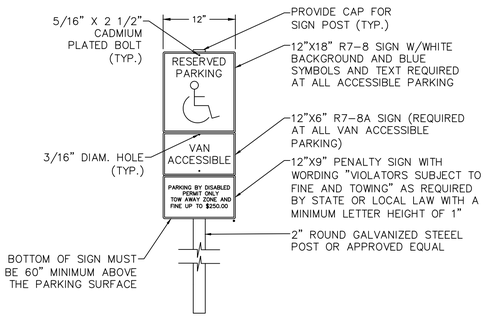

6 TYPICAL ACCESSIBLE PARKING SIGNAL DETAIL
NOT TO SCALE

NOTE:

1. TYPICALLY VAN SPACES SHALL BE 132" MINIMUM.
2. EXCEPTION: VAN SPACES SHALL BE PERMITTED TO BE 96" WIDE MINIMUM WHERE THE ACCESS AISLE IS 96" WIDE MINIMUM.
3. REFER TO NOTES ON DETAIL 3.

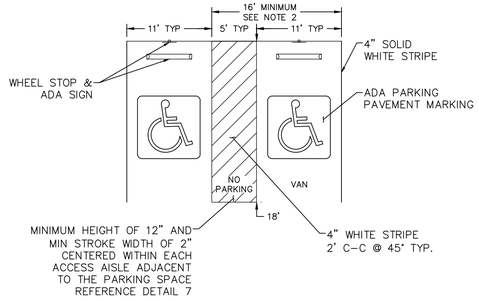

5 TYPICAL VAN ACCESSIBLE PARKING DETAIL
NOT TO SCALE

NOTE:

1. THE INTERNATIONAL SYMBOL OF ACCESSIBILITY SHALL BE PAINTED CONSPICUOUSLY ON THE SURFACE IN A COLOR THAT CONTRASTS THE PAVEMENT.
2. THE WORDS "NO PARKING" PAINTED AND CENTERED WITHIN ANY ACCESS AISLE ADJACENT TO THE PARKING SPACE.

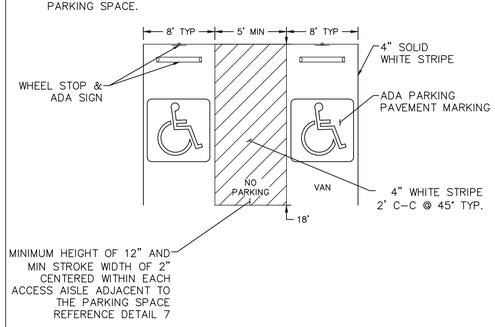

3 TYPICAL ACCESSIBLE PARKING DETAIL
NOT TO SCALE

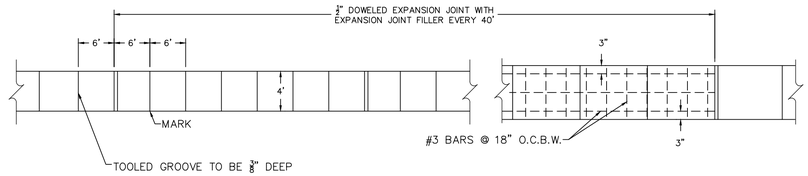

NOTES:
1. 'W'=SIDEWALK WIDTH 4' MIN. 5' IF SIDEWALK IS ADJACENT TO CURB, OR GREATER AS INDICATED ON THE PLANS.

PLAN
REINFORCED CONCRETE SIDEWALK

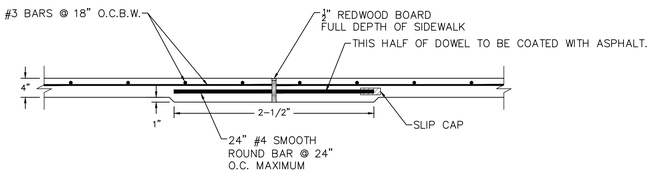

EXPANSION JOINT DETAIL

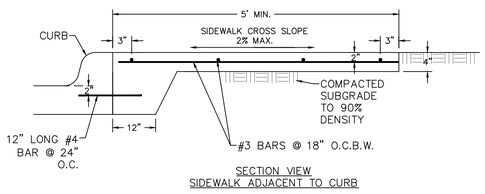

SECTION VIEW
SIDEWALK ADJACENT TO CURB

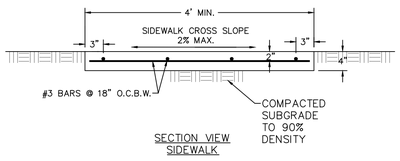

SECTION VIEW
SIDEWALK

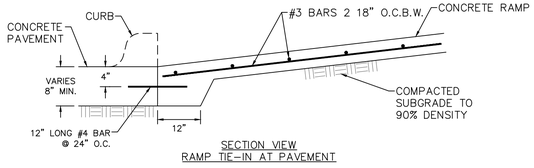

SECTION VIEW
RAMP TIE-IN AT PAVEMENT

4 SIDEWALK DETAILS
NOT TO SCALE

NOTE:

1. THE INTERNATIONAL SYMBOL OF ACCESSIBILITY SHALL BE PAINTED CONSPICUOUSLY ON THE SURFACE IN A COLOR THAT CONTRASTS THE PAVEMENT.

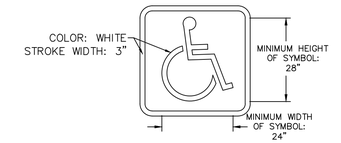

2 ADA PARKING PAVEMENT MARKING DETAIL
NOT TO SCALE

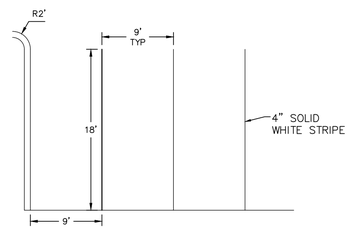

1 TYPICAL PARKING DETAIL
NOT TO SCALE

THE RESERVES AT MAGNOLIA
DENTON, TEXAS

PRIVATE PAVING DETAILS

mma
civil engineering surveying landscape architecture planning
tbpels registration number: f - 2759
tbpels registration/license number: 10088000
519 east border
arlington, texas 76010
817-469-1671
fax: 817-274-8757
www.mmatexas.com

5/16/2023
STATE OF TEXAS
ROBERT J. CRONIN JR
122288
LICENSED PROFESSIONAL ENGINEER

PROJECT NUMBER:	3597-00-02
PROJECT MANAGER:	R. CRONIN
DRAWN BY:	G. SANCHEZ
CHECKED BY:	A. TAYLOR
ISSUE DATE:	5/16/2023

REV.	DATE	DESCRIP.	BY

SHEET CONTENT:

PRIVATE PAVING DETAILS

SHEET NO:
C11.2

COPYRIGHT © 2023 MMA, INC.

PLOTTED BY: ISIS HERNANDEZ DATE: 5/16/2023 11:37 AM PATH: P:\3597-00-02\700 Land Development\703 Construction Documents\Design\Plot Sheets\CONSTRUCTION DETAILS.dwg

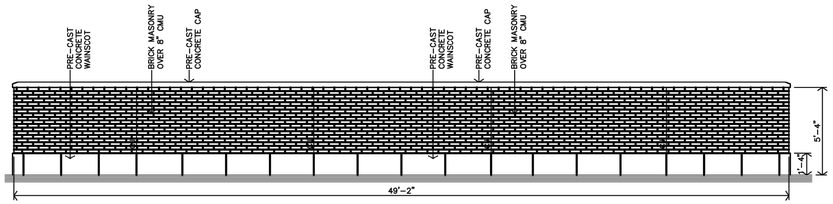

D TRASH ENCLOSURE REAR ELEVATION
1/4" = 1'-0"

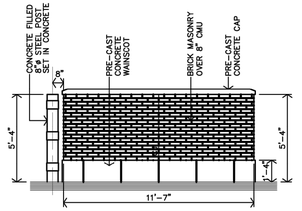

C TRASH ENCLOSURE SIDE ELEVATION
1/4" = 1'-0"

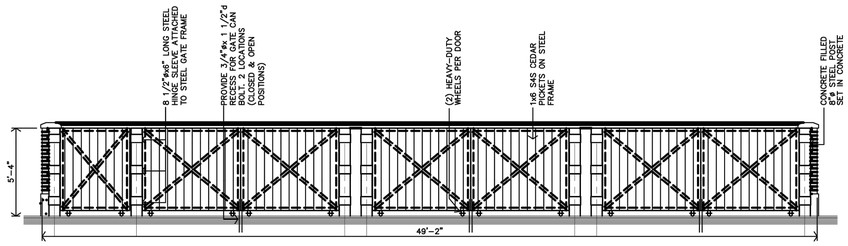

B TRASH ENCLOSURE FRONT ELEVATION
1/4" = 1'-0"

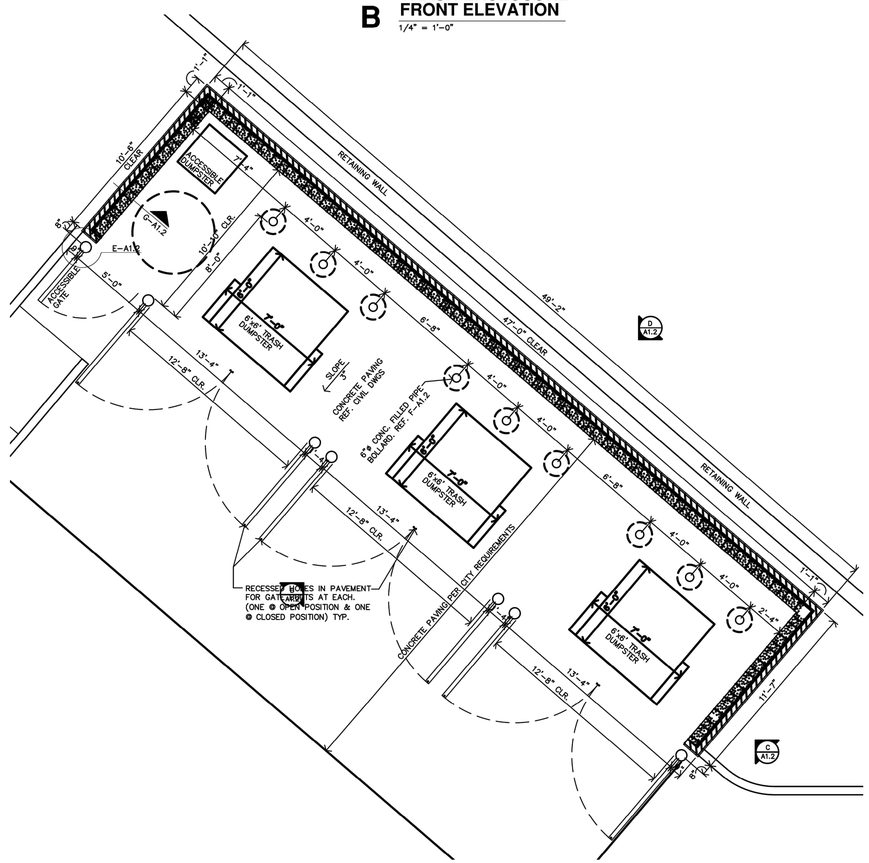

A TRASH ENCLOSURE PLAN
1/4" = 1'-0"

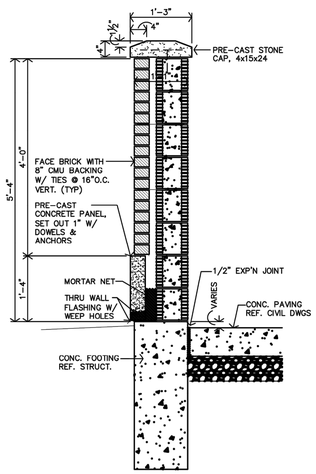

G TRASH ENCLOURE SECTION
3/4" = 1'-0"

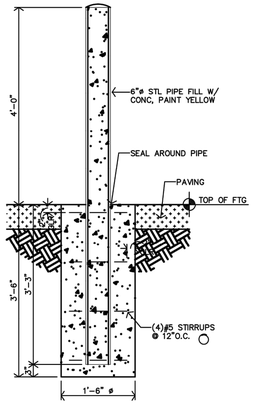

F TRASH ENCLOSURE BOLLARD DETAIL
3/4" = 1'-0"

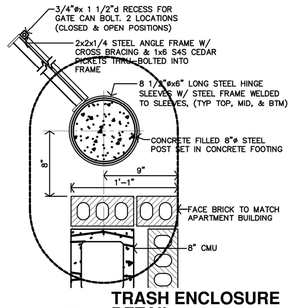

E TRASH ENCLOSURE DETAIL
1 1/2" = 1'-0"

1 TRASH ENCLOSURE DETAIL
NOT TO SCALE

THE RESERVES AT MAGNOLIA
DENTON, TEXAS

PRIVATE PAVING DETAILS

mma
civil engineering surveying landscape architecture planning
tbpels registration number: f - 2759
tbpels registration/license number: 10088000
519 east border
arlington, texas 76010
817-469-1671
fax: 817-274-8757
www.mmatexas.com

5/16/2023
STATE OF TEXAS
ROBERT J. CRONIN JR.
122288
LICENSED PROFESSIONAL ENGINEER

PROJECT NUMBER:	3597-00-02
PROJECT MANAGER:	R. CRONIN
DRAWN BY:	G. SANCHEZ
CHECKED BY:	A. TAYLOR
ISSUE DATE:	5/16/2023

REV.	DATE	DESCRIP.	BY

SHEET CONTENT:

PRIVATE PAVING DETAILS

SHEET NO:
C11.3

COPYRIGHT © 2023 MMA, INC.

PLOTTED BY: ISIS HERNANDEZ DATE: 5/16/2023 11:37 AM PATH: P:\3597-00-02\700 Land Development\703 Construction Documents\Design\Plot Sheets\CONSTRUCTION DETAILS.dwg

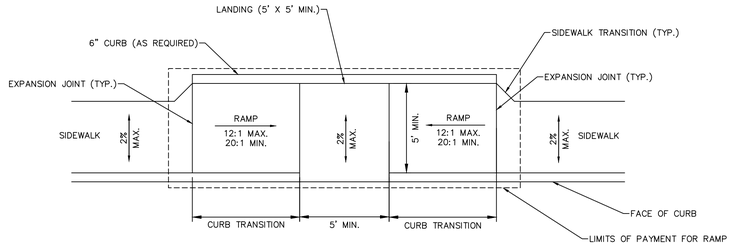

3 MID-BLOCK RAMP
(SIDEWALK ADJACENT TO CURB)
NOT TO SCALE

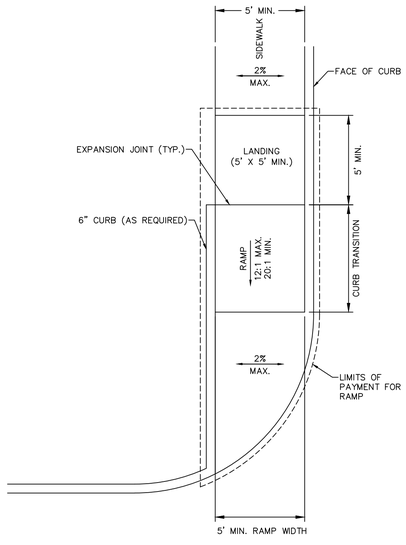

2 PERPENDICULAR CURB RAMP
(SIDEWALK ADJACENT TO CURB)
NOT TO SCALE

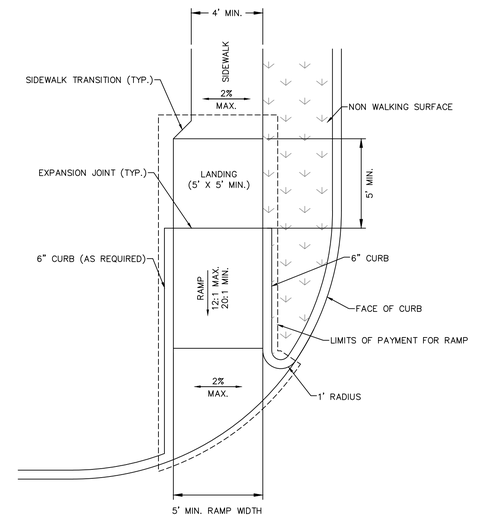

1 PERPENDICULAR CURB RAMP
NOT TO SCALE

THE RESERVES AT MAGNOLIA
DENTON, TEXAS

PRIVATE RAMP DETAILS

mma
civil engineering surveying landscape architecture planning
tbpels registration number: f – 2759
tbpels registration/license number: 10088000
519 east border
arlington, texas 76010
817-469-1671
fax: 817-274-8757
www.mmatexas.com

5/16/2023
STATE OF TEXAS
ROBERT J. CRONIN JR.
122288
LICENSED PROFESSIONAL ENGINEER

PROJECT NUMBER:	3597-00-02
PROJECT MANAGER:	R. CRONIN
DRAWN BY:	G. SANCHEZ
CHECKED BY:	A. TAYLOR
ISSUE DATE:	5/16/2023

REV.	DATE	DESCRIP.	BY

SHEET CONTENT:
PRIVATE RAMP DETAILS

SHEET NO:
C11.4

COPYRIGHT © 2023 MMA, INC.

PLOTTED BY: ISIS HERNANDEZ DATE: 5/16/2023 11:37 AM PATH: P:\3597-00-02\700 Land Development\703 Construction Documents\Design\Plot Sheets\CONSTRUCTION DETAILS.dwg

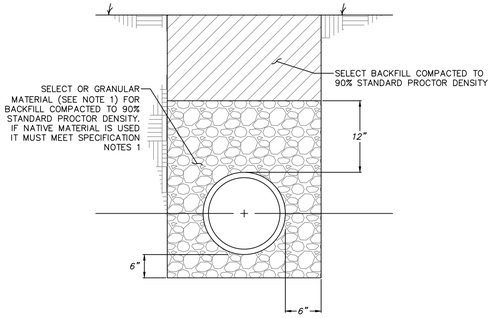

NOTES:
1. GRANULAR MATERIAL SHALL BE FREE FLOWING, SUCH AS SAND, HYDRAULICALLY GRADED CRUSHED STONE FINES, MIXED SAND AND GRAVEL, OR SANDY LOAM. THE MATERIAL SHALL BE FREE FROM LUMPS, STONES OVER TWO INCHES IN DIAMETER, CLAY, AND ORGANIC MATTER.

6 WATER PVC LINE STANDARD EMBEDMENT
NOT TO SCALE

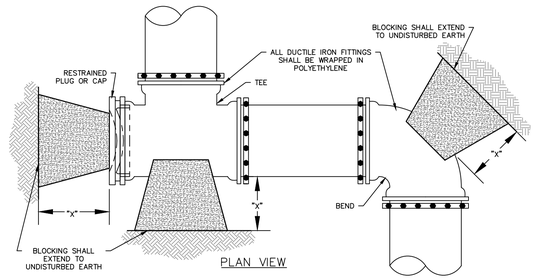

NOTES:
1. THRUST BLOCKING AREAS SHOWN ARE BASED ON:
   1.1. 225 PSI TEST PRESSURE
   1.2. 3,000 PSF HORIZONTAL OR LATERAL BEARING PRESSURE FOR ACCEPTABLE SOILS
   1.3. MINIMUM COVER OF 42"
   1.4. A SAFETY FACTOR OF 1.5.
2. THE ENGINEER SHALL PROVIDE A SEPARATE BLOCKING TABLE WHEN THE CONDITIONS DO NOT MEET THE ABOVE ASSUMPTIONS.
3. THE CONTRACTOR IS REQUIRED TO PROVIDE THRUST RESTRAINT BY MEANS OF THRUST BLOCKING FOR ALL PIPES. THIS ITEM SHALL BE CONSIDERED SUBSIDIARY TO THE VARIOUS ITEMS BID.
4. ALL MJ FITTINGS SHALL BE ADDITIONALLY RESTRAINED WITH RETAINER GLANDS.
5. BLOCKING FOR WATER LINES LARGER THAN 24" SHALL BE DESIGNED FOR THE SPECIFIC LOCATION AND SHOWN ON THE DRAWINGS.
6. ALL DUCTILE IRON FITTINGS SHALL BE WRAPPED IN POLYETHYLENE ENCASEMENT PRIOR TO PLACING OF BLOCKING.

HORIZONTAL THRUST BLOCKING TABLE

PIPE SIZE	"X" DIM.**	PLUGS, TEES, DEAD-ENDS	90° BENDS	45° BENDS	22.5° BENDS	11.25° BENDS
		MIN. AREA (SF)	*MIN. AREA (SF)*	*MIN. AREA (SF)*	*MIN. AREA (SF)*	*MIN. AREA (SF)*
6"	1'-6"	4.00*	4.50	4.00*	4.00*	4.00*
8"	1'-6"	5.65	8.00	4.33	4.00*	4.00*
10"	1'-6"	8.84	12.50	6.76	4.00*	4.00*
12"	1'-6"	12.72	17.99	9.74	4.96	4.00*
16"	2'-0"	22.62	31.99	17.31	8.83	4.43
20"	2'-0"	35.34	49.98	27.05	13.79	6.93
24"	2'-0"	50.89	71.97	38.95	19.86	9.98

*MINIMUM THRUST BLOCKING SURFACE AREA SHALL BE 4 SQUARE FEET.
**DIMENSION "X" TO BE A MINIMUM OF ONE FOOT AND SIX INCHES, BUT IS TO BE INCREASED WHERE NECESSARY TO PROVIDE BEARING AGAINST UNDISTURBED TRENCH WALL.

3 HORIZONTAL THRUST BLOCKING
NOT TO SCALE

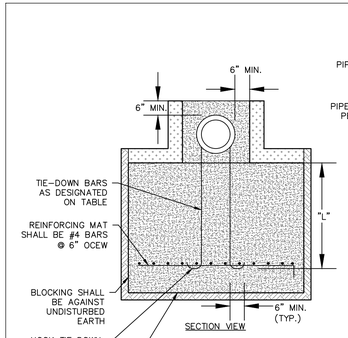

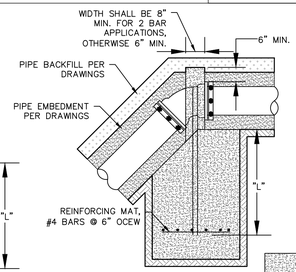

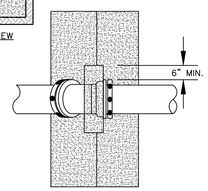

NOTES:
1. VERTICAL TIE-DOWN BLOCKING VOLUMES SHOWN ARE BASED ON:
   1.1. 225 PSI TEST PRESSURE
   1.2. 150 PCF CONCRETE DENSITY
   1.3. A SAFETY FACTOR OF 1.5.
2. BAR QUANTITIES ARE BASED ON:
   2.1. 30 KSI #4 STEEL REINFORCEMENT BAR
   2.2. A FACTOR OF SAFETY OF 1.5
   2.3. "L" SHALL BE A MINIMUM OF 18".
3. THE ENGINEER SHALL PROVIDE A SEPARATE VERTICAL TIE-DOWN BLOCKING TABLE WHEN THE CONDITIONS DO NOT MEET THE ABOVE ASSUMPTIONS.
4. THE CONTRACTOR IS REQUIRED TO PROVIDE THRUST RESTRAINT BY MEANS OF VERTICAL TIE-DOWN BLOCKING FOR ALL PIPES. THIS ITEM SHALL BE CONSIDERED SUBSIDIARY TO THE VARIOUS ITEMS BID.
5. ALL MJ FITTINGS SHALL BE ADDITIONALLY RESTRAINED WITH RETAINER GLANDS.
6. WIDTHS, LENGTHS AND DEPTHS MAY VARY BUT SATISFACTION OF ABOVE MINIMUM VOLUMES MUST BE DEMONSTRATED.
7. KEEP CONCRETE CLEAR OF PIPE JOINTS AND BOLTS.
8. VERTICAL TIE-DOWN BLOCKING FOR LINES 16" AND LARGER SHALL BE DESIGNED FOR THE SPECIFIC LOCATION AND SHOWN ON THE DRAWINGS.
9. ALL DUCTILE IRON FITTINGS SHALL BE WRAPPED IN POLYETHYLENE ENCASEMENT PRIOR TO PLACING OF BLOCKING.

VERTICAL TIE-DOWN BLOCKING TABLE

PIPE SIZE	90° BENDS	45° BENDS		22.5° BENDS		11.25° BENDS	
		MIN. VOLUME (CF)	*MIN. #4 BARS*	*MIN. VOLUME (CF)*	*MIN. #4 BARS*	*MIN. VOLUME (CF)*	*MIN. #4 BARS*
6"	ALL 90° BENDS SHALL BE RESTRAINED	48.69	1	24.82	1	12.47	1
8"		86.56	2	44.13	1	22.17	1
10"		135.25	3	68.95	2	34.64	1
12"		194.76	4	99.29	2	49.88	1

5 VERTICAL THRUST BLOCKING
NOT TO SCALE

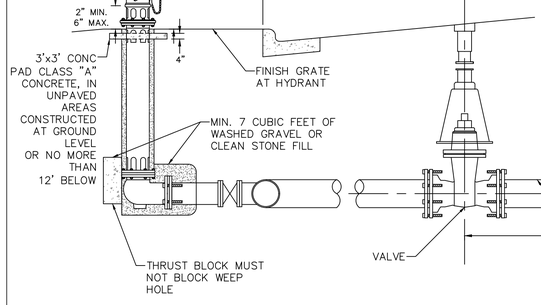

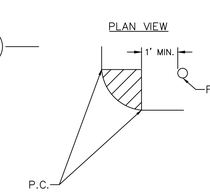

NOTES:
1. FIRE HYDRANTS SHALL CONFORM TO AWWA STANDARD SPECIFICATIONS FOR FIRE HYDRANTS FOR ORDINARY WATER WORKS SERVICE, C-502. FIRE HYDRANTS SHALL HAVE A 5" " MIN. VALVE OPENING AND A BARREL APPROXIMATELY 7" INSIDE DIAMETER. ALL HYDRANTS SHALL BE EQUIPPED WITH A BREAKAWAY FLANGE.
2. ALL JOINTS SHALL BE MECHANICAL JOINTS.
3. TYPICAL VALVE: ACTUAL VALVE LOCATIONS WILL DEPEND ON LOCATION OF WATER MAIN.
4. FIRE HYDRANTS SHALL BE NO CLOSER THAN 18" TO EXISTING OR PROPOSED SIDEWALKS.
5. STANDARD BURY DEPTH IS 4'.
6. SET FIRE HYDRANT ON THE LOT LINE EXTENDED WHEN POSSIBLE.
7. FIRE HYDRANT SHALL BE LOCATED MINIMUM 1' OUTSIDE OF THE AREA BETWEEN THE P.C.'S OF THE CORNER TURNING RADII AT INTERSECTIONS. (SEE PLAN VIEW)
8. PLACEMENT OF FIRE HYDRANT SHALL BE WHERE PUMPER NOZZLE IS PERPENDICULAR TO AND FACING THE NEAREST CURB.

2 FIRE HYDRANT INSTALLATION
NOT TO SCALE

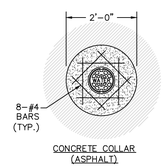

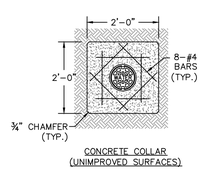

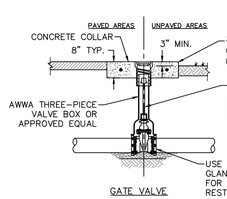

NOTE:
1. GATE VALVES SHALL BE RESILIENT SEATED.
2. PROVIDE 3" MIN. OF COVER OVER REINFORCEMENT IN ALL DIRECTIONS.
3. COLLARS SHALL BE 4,000 PSI.
4. A CONCRETE COLLAR IS NOT REQUIRED WHEN VALVE IS LOCATED UNDER CONCRETE PAVING.

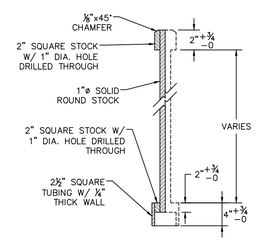

NOTE:
1. 1" ROUND SOLID BAR & 2" SQUARE PER ASTM A-108-81. SAE 1020, COLD DRAWN OR BETTER.
2. 2-½" SQUARE TUBING PER ASTM A-512-79, SAE 1020, COLD DRAWN OR BETTER.
3. ALL WELDS SHALL COMPLY WITH A.W.S. CODE FOR PROCEDURE, APPEARANCE AND QUALITY OF WELDS.

STANDARD WATER DISTRIBUTION

1 GATE VALVE & BOX
NOT TO SCALE

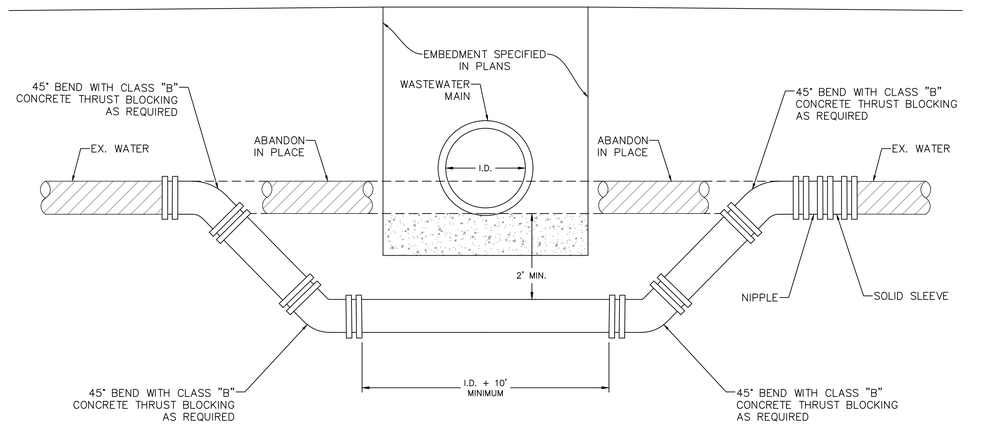

4 WATER MAIN LOWERING BELOW WASTEWATER MAIN
NOT TO SCALE

THE RESERVES AT MAGNOLIA
DENTON, TEXAS

PRIVATE WATER DETAILS

mma
civil engineering surveying landscape architecture planning
tbpels registration number: f - 2759
tbpels registration/license number: 10088000
519 east border
arlington, texas 76010
817-469-1671
fax: 817-274-8757
www.mmatexas.com

5/16/2023
STATE OF TEXAS
ROBERT J. CRONIN JR.
122288
LICENSED PROFESSIONAL ENGINEER

PROJECT NUMBER:	3597-00-02
PROJECT MANAGER:	R. CRONIN
DRAWN BY:	G. SANCHEZ
CHECKED BY:	A. TAYLOR
ISSUE DATE:	5/16/2023

REV.	DATE	DESCRIP.	BY

SHEET CONTENT:

PRIVATE WATER DETAILS

SHEET NO:
C11.5

COPYRIGHT © 2023 MMA, INC.

PLOTTED BY: ISIS HERNANDEZ DATE: 5/16/2023 11:37 AM PATH: P:\3597-00-02\700 Land Development\703 Construction Documents\Design\Plot Sheets\CONSTRUCTION DETAILS.dwg

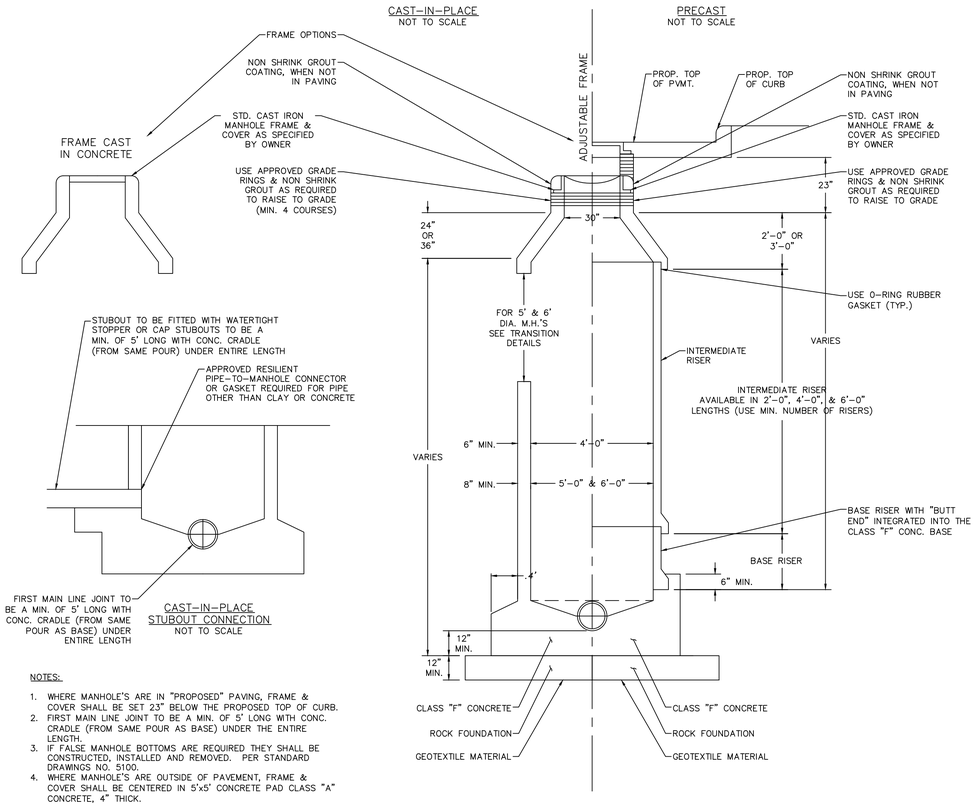

NOTES:

1. WHERE MANHOLE'S ARE IN "PROPOSED" PAVING, FRAME & COVER SHALL BE SET 23" BELOW THE PROPOSED TOP OF CURB.
2. FIRST MAIN LINE JOINT TO BE A MIN. OF 5' LONG WITH CONC. CRADLE (FROM SAME POUR AS BASE) UNDER THE ENTIRE LENGTH.
3. IF FALSE MANHOLE BOTTOMS ARE REQUIRED THEY SHALL BE CONSTRUCTED, INSTALLED AND REMOVED. PER STANDARD DRAWINGS NO. 5100.
4. WHERE MANHOLE'S ARE OUTSIDE OF PAVEMENT, FRAME & COVER SHALL BE CENTERED IN 5'x5' CONCRETE PAD CLASS "A" CONCRETE, 4" THICK.

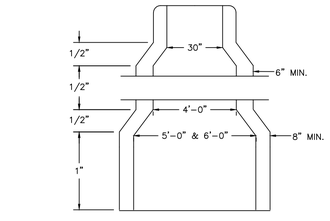

CAST-IN-PLACE TRASNITION DETAIL FOR 5' & 6' DIA. M.H.'S
NOT TO SCALE

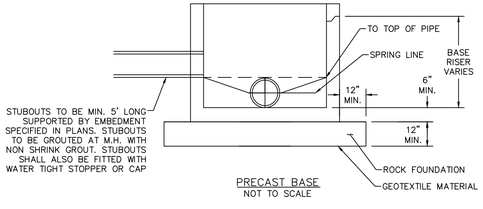

PRECAST BASE
NOT TO SCALE

5 PRE-CAST & CAST-IN-PLACE MANHOLE
NOT TO SCALE

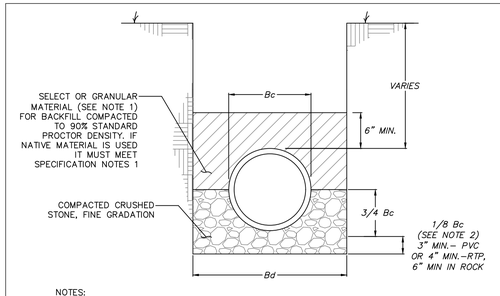

NOTES:

1. GRANULAR MATERIAL SHALL BE FREE FLOWING, SUCH AS SAND, HYDRAULICALLY GRADED CRUSHED STONE FINES, MIXED SAND AND GRAVEL, OR SANDY LOAM. THE MATERIAL SHALL BE FREE FROM LUMPS, STONES OVER TWO INCHES IN DIAMETER, CLAY, AND ORGANIC MATTER.
2. FOR MAINS 42" DIAMETER AND LARGER, ⅛ Bc SHALL BE TAKEN AS 6".
3. Bc = OUTSIDE DIAMETER OF PIPE
4. Bd = TRENCH WIDTH
5. IF CLEANOUT IS PLACED IN ADVANCE OF PAVEMENT PLACE SAND AROUND CLEANOUT CASTING IN LIEU OF CLASS "B" CONCRETE.
6. IF CLEANOUT IS OUTSIDE OF PAVEMENT, CENTER CASTING IN 15"X15" CLASS "A" CONCRETE PAD "4" THICK.

4 SEWER PVC LINE STANDARD EMBEDMENT
NOT TO SCALE

CONCRETE ENCASEMENT (PLAN VIEW)

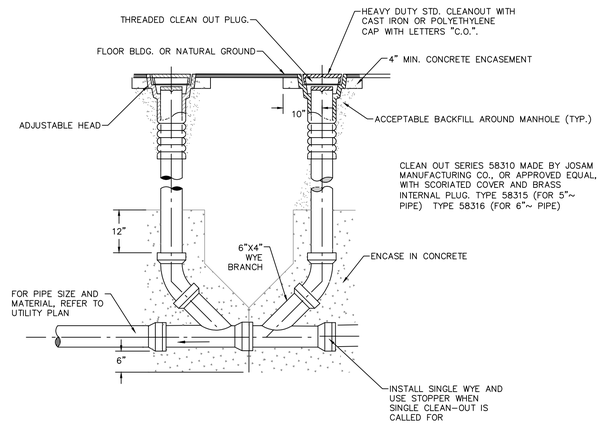

3 CLEAN OUT
NOT TO SCALE

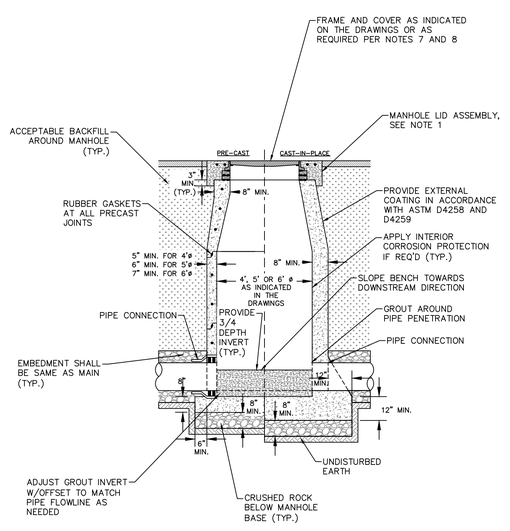

NOTES:

1. MANHOLE TOP SHALL BE PER MANHOLE LID ASSEMBLY DETAILS AS INDICATED IN THE DRAWINGS.
2. FOR CAST-IN-PLACE MANHOLES, CURE FOR THREE DAYS BEFORE BACKFILLING AROUND STRUCTURE
3. IF SOIL CONDITIONS OR GROUND WATER PREVENT USE OF COARSE AGGREGATE BASE A 2-INCH MUD SLAB MAY BE SUBSTITUTED.
4. PRE-CAST JOINTS SHALL CONFORM TO ASTM C478.
5. UNLESS OTHERWISE INDICATED IN THE DRAWINGS, 4'ø MANHOLES SHALL BE USED FOR 21" AND SMALLER SANITARY SEWER LINES AND 5'ø MANHOLES SHALL BE USED 24" UP TO 36" SANITARY SEWER LINES.
6. HINGED LIDS SHALL BE REQUIRED FOR ALL SANITARY SEWER MANHOLES WITH CONNECTING LINES OF 24-INCHES AND GREATER.
7. HINGED LIDS SHALL BE REQUIRED FOR ALL SANITARY SEWER MANHOLES WITH A RIM ELEVATION GREATER THAN 12-INCHES ABOVE NATURAL GROUND.

2 STANDARD MANHOLE
NOT TO SCALE

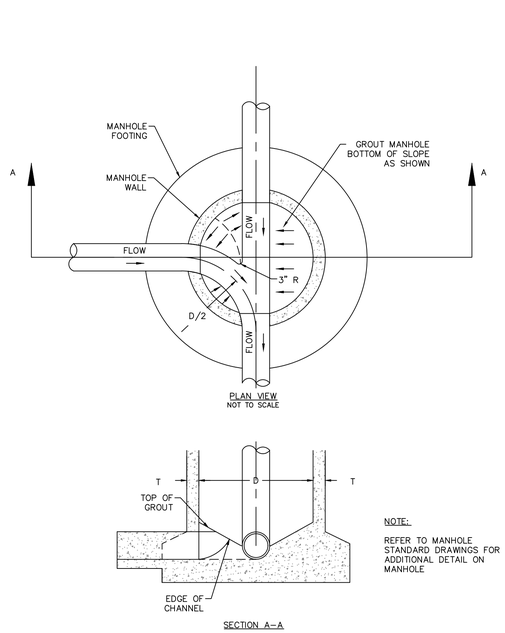

NOTE:

REFER TO MANHOLE STANDARD DRAWINGS FOR ADDITIONAL DETAIL ON MANHOLE

1 WASTEWATER MANHOLE LINE INTERSECTION
NOT TO SCALE

PRIVATE SANITARY SEWER DETAILS

THE RESERVES AT MAGNOLIA
DENTON, TEXAS

mma
civil engineering surveying landscape architecture planning
tbpels registration number: f - 2759
tbpels registration/license number: 10088000
519 east border
arlington, texas 76010
817-469-1671
fax: 817-274-8757
www.mmatexas.com

5/16/2023

STATE OF TEXAS
ROBERT J. CRONIN JR.
122288
LICENSED PROFESSIONAL ENGINEER

PROJECT NUMBER:	3597-00-02
PROJECT MANAGER:	R. CRONIN
DRAWN BY:	G. SANCHEZ
CHECKED BY:	A. TAYLOR
ISSUE DATE:	5/16/2023

REV.	DATE	DESCRIP.	BY

SHEET CONTENT:

PRIVATE SANITARY SEWER DETAILS

SHEET NO:

C11.6

COPYRIGHT © 2023 MMA, INC.

PLOTTED BY: ISIS HERNANDEZ DATE: 5/16/2023 11:37 AM PATH: P:\3597-00-02\700 Land Development\703 Construction Documents\Design\Plot Sheets\CONSTRUCTION DETAILS.dwg

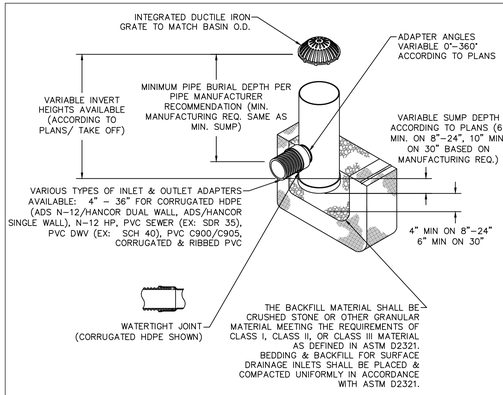

ALL DOME GRATE INLETS TO BE NYOPLAST OR APPROVED EQUAL.

3 DRAIN BASIN WITH DOME GRATE
NOT TO SCALE

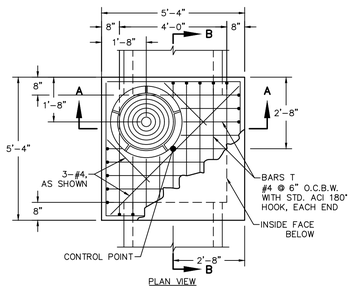

PLAN VIEW

SECTION A

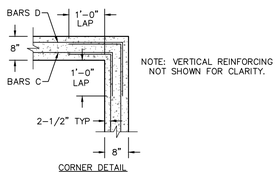

CORNER DETAIL

NOTE: VERTICAL REINFORCING NOT SHOWN FOR CLARITY.

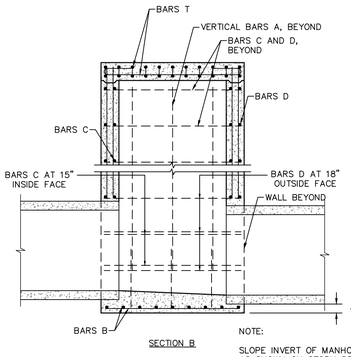

SECTION B

NOTE: SLOPE INVERT OF MANHOLE AS SHOWN ON STORM DRAIN PLAN AND PROFILE SHEETS.

NOTE: "D" = SEE NOTE DEPTH "D" SHALL BE SHOWN ON STORM DRAIN PLAN AND PROFILE SHEETS.

NOTES:
1. ALL CONCRETE SHALL HAVE A MINIMUM COMPRESSIVE STRENGTH f'c = 3,000 PSI AT 28 DAYS.
2. ALL REINFORCING STEEL SHALL BE GRADE 60.
3. ALL REINFORCING STEEL SHALL HAVE MINIMUM 2" COVER TO CENTER OF BAR, UNLESS NOTED OTHERWISE.
4. ALL DIMENSIONS RELATING TO REINFORCING ARE TO CENTER OF BARS.
5. LOCATION OF STRUCTURE AS SHOWN IN PLANS REFERS TO CONTROL POINT SHOWN ON THIS DETAIL.
6. FIELD CUT AND BEND BARS AS NECESSARY TO ACCOMMODATE STORM DRAIN PIPE PER TYPICAL MANHOLE / PIPE PENETRATION DETAIL.
7. MAXIMUM PIPE INSIDE DIAMETER FOR WALL PENETRATIONS.

JUNCTION BOX SIZE	DIAMETER
4' SQUARE	36"
5' SQUARE	48"
6' SQUARE	60"

NOTE TO DESIGNER:

FOR PIPE DIAMETERS OR BOX SECTION WIDTHS EXCEEDING 60", DESIGNER IS REQUIRED TO PROVIDE SPECIAL DETAIL.

2 STANDARD 4' SQUARE JUNCTION BOX
NOT TO SCALE

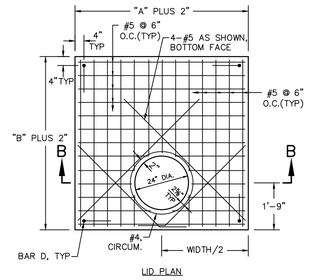

LID PLAN

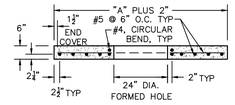

SECTION B

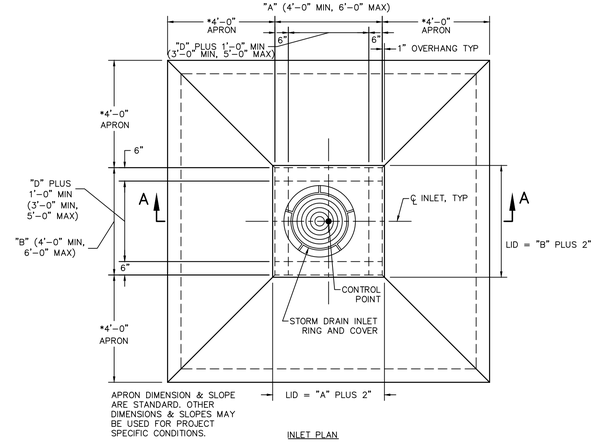

INLET PLAN

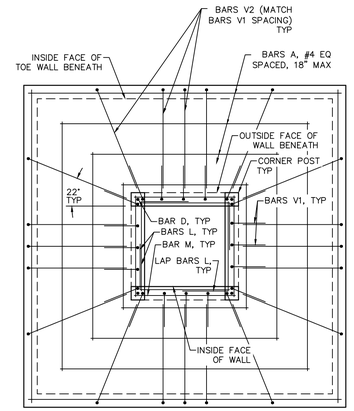

(LID NOT SHOWN FOR CLARITY, SHOWING REINFORCING IN WALLS AND IN APRON.)

APRON PLAN

NOTE:
CENTER DOWEL D IN CORNER POST, TYP.

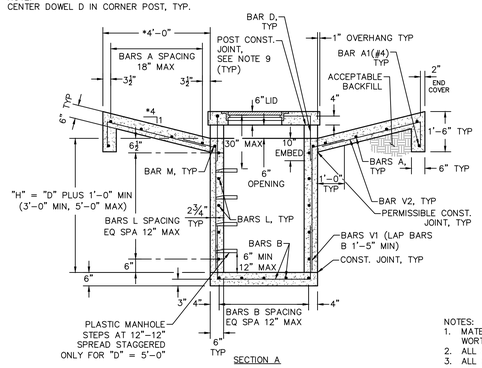

SECTION A

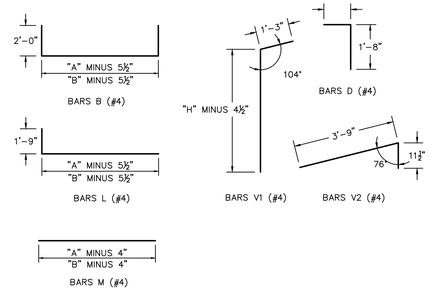

NOTES:
1. MATERIALS AND WORKMANSHIP SHALL CONFORM WITH THE REQUIREMENTS OF CITY OF FORT WORTH STANDARD SPECIFICATION 33 49 20, CURB AND DROP INLETS.
2. ALL CONCRETE SHALL HAVE A MINIMUM COMPRESSIVE STRENGTH f'c = 3,000 PSI AT 28 DAYS.
3. ALL REINFORCING STEEL SHALL BE GRADE 60.
4. ALL EXPOSED EDGES SHALL HAVE ¾" CHAMFER.
5. ALL REINFORCING STEEL SHALL HAVE MINIMUM 2" COVER TO CENTER OF BAR, UNLESS NOTED OTHERWISE.
6. ALL DIMENSIONS RELATING TO REINFORCING ARE TO CENTER OF BARS.
7. LOCATION OF STRUCTURE AS SHOWN IN PLANS REFERS TO CONTROL POINT SHOWN ON THIS DETAIL.
8. "D" EQUALS THE MAXIMUM INSIDE DIAMETER OF ANY PIPE ENTERING THE INLET (48" MAX).
9. LID SHALL BE CONSTRUCTED LEVEL.
10. APPROACH ANGLE OF ANY CONNECTED PIPES SHALL BE WITHIN 10° NORMAL OF INLET WALL. WHEN APPROPRIATE, PIPE BENDS AND CURVATURE SHALL BE USED TO STAY WITHIN THIS LIMIT.
11. INLET IS TO BE USED IN MEDIANS AND DITCHES AWAY FROM THE ROADWAY.

1 STANDARD DROP INLET WITH LID
NOT TO SCALE

THE RESERVES AT MAGNOLIA
DENTON, TEXAS

PRIVATE STORM DRAIN DETAILS

mma
civil engineering surveying landscape architecture planning
tbpels registration number: f – 2759
tbpels registration/license number: 10088000
519 east border
arlington, texas 76010
817–469–1671
fax: 817–274–8757
www.mmatexas.com

5/16/2023

STATE OF TEXAS
ROBERT J. CRONIN JR.
122288
LICENSED PROFESSIONAL ENGINEER

PROJECT NUMBER:	3597–00–02
PROJECT MANAGER:	R. CRONIN
DRAWN BY:	G. SANCHEZ
CHECKED BY:	A. TAYLOR
ISSUE DATE:	5/16/2023

REV.	DATE	DESCRIP.	BY

SHEET CONTENT:

PRIVATE STORM DRAIN DETAILS

SHEET NO:

C11.7

COPYRIGHT © 2023 MMA, INC.

PLOTTED BY: ISIS HERNANDEZ DATE: 5/16/2023 11:37 AM PATH: P:\3597-00-02\700 Land Development\703 Construction Documents\Design\Plot Sheets\CONSTRUCTION DETAILS.dwg

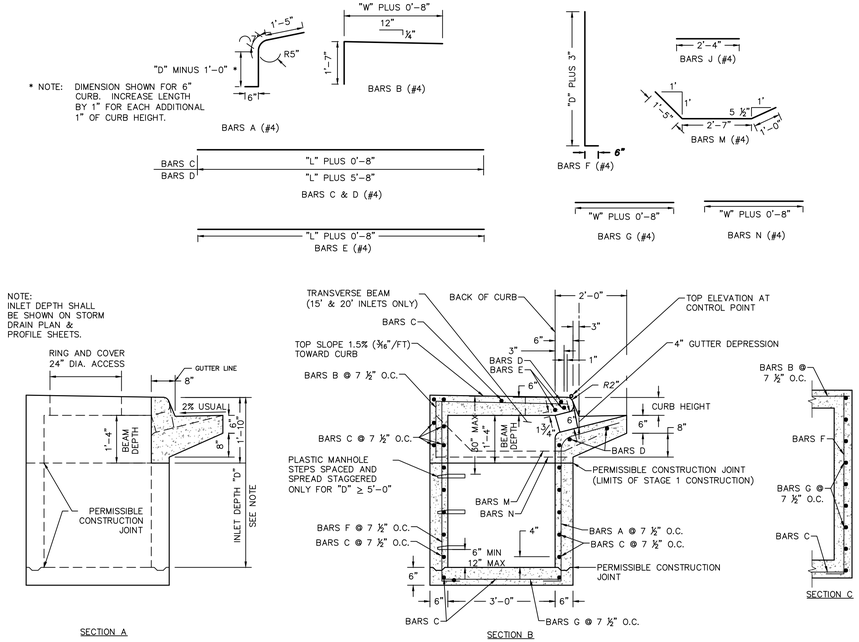

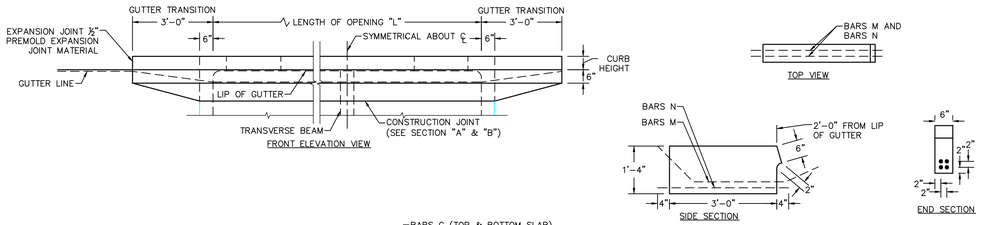

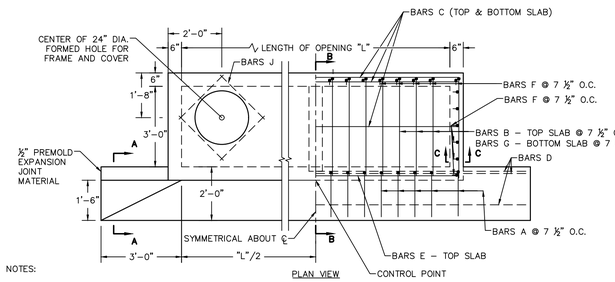

NOTES:

LOCATION OF RING AND COVER TO BE AT BOTH ENDS OF INLET. FOR 20' INLETS, ADD RING AND COVER ON DOWNSTREAM SIDE OF TRANSVERSE BEAM, UNLESS OTHERWISE DIRECTED BY ENGINEER.

THE PIPE IS TO COME INTO THE INLET AT THE DOWNSTREAM LID.

FIELD CUT BARS B & C TO CLEAR MANHOLE

NOTES:

1. ALL CONCRETE SHALL HAVE A MINIMUM COMPRESSIVE STRENGTH f'c = 3,000 PSI AT 28 DAYS.
2. ALL REINFORCING STEEL SHALL BE GRADE 60.
3. CHAMFER ALL EXPOSED EDGES ¾" EXCEPT WHERE OTHERWISE NOTED.
4. ALL REINFORCING STEEL SHALL HAVE MINIMUM 2" COVER TO CENTER OF BAR, UNLESS OTHERWISE NOTED.
5. ALL DIMENSIONS RELATING TO REINFORCING ARE TO CENTER OF BARS.
6. LOCATION OF STRUCTURE AS SHOWN IN PLANS REFERS TO CONTROL POINT AT THE FACE OF CURB AND MID-POINT OF THE INLET, AS SHOWN ON THIS DETAIL.
7. FIELD CUT AND BEND BARS AS NECESSARY TO ACCOMMODATE STORM DRAIN PIPE PER TYPICAL MANHOLE / PIPE PENETRATION DETAIL.
8. A SEALED ½" EXPANSION JOINT SHALL BE PLACED ALONG ALL VERTICAL FACES ABUTTING CONCRETE PAVEMENT.
9. STANDARD INLET DEPTH "D" FOR NEW CONSTRUCTION SHALL BE 4'-0" AT UPPER END, AND 4'-9" AT OUTLET END. OTHER DEPTHS MAY BE USED BASED ON PROJECT SPECIFIC CONDITIONS. MINIMUM 2% FALL SHALL BE USED IN ALL CASES.

2 STANDARD STORM DRAIN INLET
NOT TO SCALE

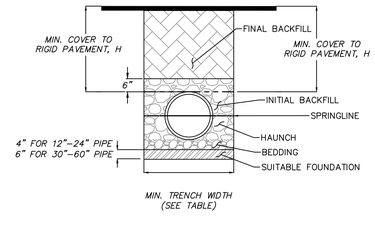

NOTES:

1. ALL PIPE SYSTEMS SHALL BE INSTALLED IN ACCORDANCE WITH ASTM D2321, "STANDARD PRACTICE FOR UNDERGROUND INSTALLATION OF THERMOPLASTIC PIPE FOR SEWERS AND OTHER GRAVITY FLOW APPLICATIONS", LATEST ADDITION
2. MEASURES SHOULD BE TAKEN TO PREVENT MIGRATION OF NATIVE FINES INTO BACKFILL MATERIAL, WHEN REQUIRED.
3. FOUNDATION: WHERE THE TRENCH BOTTOM IS UNSTABLE, THE CONTRACTOR SHALL EXCAVATE TO A DEPTH REQUIRED BY THE ENGINEER AND REPLACE WITH SUITABLE MATERIAL AS SPECIFIED BY THE ENGINEER. AS AN ALTERNATIVE AND AT THE DISCRETION OF THE DESIGN ENGINEER, THE TRENCH BOTTOM MAY BE STABILIZED USING A GEOTEXTILE MATERIAL.
4. BEDDING: SUITABLE MATERIAL SHALL BE CLASS I, II OR III. THE CONTRACTOR SHALL PROVIDE DOCUMENTATION FOR MATERIAL SPECIFICATION TO ENGINEER. UNLESS OTHERWISE NOTED BY THE ENGINEER, MINIMUM BEDDING THICKNESS SHALL BE 4" FOR 4"–24", 6" FOR 30"–60".
5. INITIAL BACKFILL: SUITABLE MATERIAL SHALL BE CLASS I, II OR III IN THE PIPE ZONE EXTENDING NOTE LESS THAN 6" ABOVE CROWN OF PIPE. THE CONTRACTOR SHALL PROVIDE DOCUMENTATION FOR MATERIAL SPECIFICATION TO ENGINEER. MATERIAL SHALL BE INSTALLED AS REQUIRED IN ASTM D2321, LATEST EDITION.
6. MINIMUM COVER:MINIMUM COVER, H, IN NON–TRAFFIC APPLICATIONS (GRASS OR LANDSCAPE AREAS) IS 12" FROM THE TOP OF PIPE TO GROUND SURFACE. ADDITIONAL COVER MAY BE REQUIRED TO PREVENT FLOATATION. FOR TRAFFIC APPLICATIONS, MINIMUM COVER, H, IS 12" UP TO 48" DIAMETER PIPE AND 24" OF COVER FOR 60" DIAMETER PIPE, MEASURED FROM TOP OF PIPE TO BOTTOM OF FLEXIBLE PAVEMENT OR TO TOP OF RIGID PAVEMENT. FOR TRAFFIC APPLICATIONS WITH LESS THAN FOUR FEET OF COVER, EMBEDMENT OF THE PIPE SHALL BE USING ONLY A CLASS I OR CLASS II BACKFILL.

RECOMMENDED MINIMUM TRENCH WIDTHS

PIPE DIAM.	MIN. TRENCH WIDTH
4"	21"
6"	23"
8"	26"
10"	28"
12"	30"
15"	34"
18"	39"
24"	48"
30"	56"
36"	64"
42"	72"
48"	80'
60"	96"

MAXIMUM RECOMMENDED COVER BASED ON VEHICLE LOADING CONDITIONS

PROP	CLASS I		CLASS II	
	COMPACTED	DUMPED	95%	90%
4"	34	16	23	16
6"	40	19	27	19
8"	30	14	21	14
10"	34	16	23	16
12"	35	17	24	17
15"	37	18	25	18
18"	32	15	22	15
24"	27	13	19	13
30"	22	11	16	11
36"	26	12	18	12
42"	24	11	17	11
48"	23	11	16	11
60"	26	12	18	12

FILL HEIGHT TABLE GENERATED USING AASHTO SECTION 12, LOAD RESISTANCE FACTOR DESIGN (LRFD) PROCEDURE WITH THE FOLLOWING ASSUMPTIONS:
NO HYDROSTATIC PRESSURE,
UNIT WEIGHT OF SOIL (YS) = 120 PCF

*MINIMUM RECOMMENDED COVER BASED ON VEHICLE LOADING CONDITIONS***

	SURFACE LIVE LOADING CONDITION	
PIPE DIAM.	H–25	HEAVY CONSTRUCTION (75T AXLE LOAD)*
12" – 48"	12"	48"
60"	24"	60"

* *VEHICLES IN EXCESS OF 75T MAY REQUIRE ADDITIONAL COVER*
** *SEE BACKFILL REQUIREMENTS IN NOTE 6*

1 STORM HDPE DRAINAGE STANDARD EMBEDMENT
NOT TO SCALE

THE RESERVES AT MAGNOLIA
DENTON, TEXAS

PRIVATE STORM DRAIN DETAILS

mma
civil engineering surveying landscape architecture planning
tbpels registration number: f – 2759
tbpels registration/license number: 10088000
519 east border
arlington, texas 76010
817-469-1671
fax: 817-274-8757
www.mmatexas.com

5/16/2023
STATE OF TEXAS
ROBERT J. CRONIN JR.
122288
LICENSED PROFESSIONAL ENGINEER

PROJECT NUMBER:	3597-00-02
PROJECT MANAGER:	R. CRONIN
DRAWN BY:	G. SANCHEZ
CHECKED BY:	A. TAYLOR
ISSUE DATE:	5/16/2023

REV.	DATE	DESCRIP.	BY

SHEET CONTENT:

PRIVATE STORM DRAIN DETAILS

SHEET NO:

C11.8

COPYRIGHT © 2023 MMA, INC.

PLOTTED BY: ISIS HERNANDEZ DATE: 5/16/2023 11:37 AM PATH: P:\3597-00-02\700 Land Development\703 Construction Documents\Design\Plot Sheets\CONSTRUCTION DETAILS.dwg

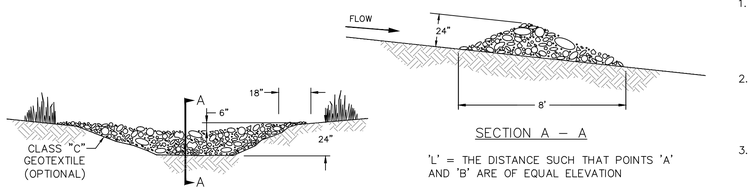

SECTION A – A

'L' = THE DISTANCE SUCH THAT POINTS 'A' AND 'B' ARE OF EQUAL ELEVATION

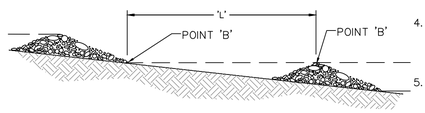

VIEW LOOKING UPSTREAM

SPACING BETWEEN CHECK DAMS
NOT TO SCALE

NOTE:
KEY STONE INTO CHANNEL BANKS AND EXTEND IT BEYOND THE ABUTMENTS A MINIMUM OF 18" TO PREVENT FLOW AROUND DAM.

ROCK BERM GENERAL NOTES:

1. STONE SHALL BE WELL GRADED WITH SIZE RANGING FROM 1½ TO 3½ INCHES IN DIAMETER DEPENDING ON EXPECTED FLOWS. GEOTEXTILE CLASS "C" OR BETTER UNDER THE BOTTOM AND SIDES OF THE DAM PRIOR TO PLACEMENT OF STONE IS OPTIONAL.
2. THE ROCK BERM SHALL BE SECURED WITH A WOVEN WIRE SHEATHING HAVING A MAXIMUM OPENING OF 1 INCH AND A MINIMUM WIRE SIZE OF 20 GAUGE AND SHALL BE BURIED IN A TRENCH APPROXIMATELY 3 TO 4 INCHES DEEP.
3. THE ROCK BERM SHALL BE INSPECTED AS SPECIFIED IN THE SWPPP AND SHALL BE REPLACED WHEN THE STRUCTURE CEASES TO FUNCTION AS INTENDED DUE TO SILT ACCUMULATION AMONG THE ROCKS, WASHOUT, CONSTRUCTION TRAFFIC DAMAGE, ETC.
4. WHEN SILT REACHES A DEPTH EQUAL TO ONE–THIRD OF THE HEIGHT OF THE BERM OR ONE FOOT, WHICHEVER IS LESS, THE SILT SHALL BE REMOVED AND DISPOSED OF PROPERLY.
5. WHEN THE SITE HAS ACHIEVED FINAL STABILIZATION OR ANOTHER EROSION OR SEDIMENT CONTROL DEVICE IS EMPLOYED, THE CHECK DAM AND ACCUMULATED SILT SHALL BE REMOVED AND DISPOSED OF IN AN APPROVED MANNER.
6. ROCK BERM SHOULD BE USED AS CHECK DAMS FOR CONCENTRATED FLOW AND ARE NOT INTENDED FOR USE IN PERIMETER PROTECTION.

6 ROCK CHECK DAM
NOT TO SCALE

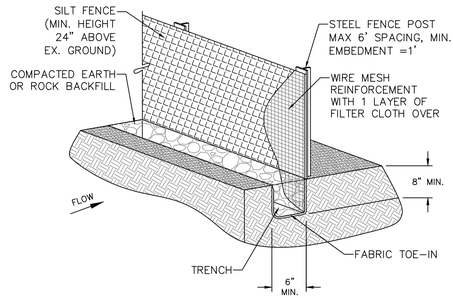

ISOMETRIC PLAN VIEW

GENERAL NOTES:

1. STEEL POSTS WHICH SUPPORT THE SILT FENCE SHALL BE INSTALLED ON A SLIGHT ANGLE TOWARD THE ANTICIPATED RUNOFF SOURCE. POST MUST BE EMBEDDED A MINIMUM OF ONE FOOT.
2. THE TOE OF THE SILT FENCE SHALL BE TRENCHED IN WITH A SPADE OR MECHANICAL TRENCHER, SO THAT THE DOWNSLOPE FACE OF THE TRENCH IS FLAT AND PERPENDICULAR TO THE LINE OF FLOW. WHERE FENCE CANNOT BE TRENCHED IN, (e.g. PAVEMENT), WEIGHT FABRIC FLAP WITH ROCK ON UPHILL SIDE TO PREVENT FLOW FROM SEEPING UNDER FENCE.
3. THE TRENCH MUST BE A MINIMUM OF 8 INCHES DEEP AND 6 INCHES WIDE TO ALLOW FOR THE SILT FENCE FABRIC TO BE LAID IN THE GROUND AND BACKFILLED WITH COMPACTED MATERIAL.
4. SILT FENCE SHOULD BE SECURELY FASTENED TO EACH STEEL SUPPORT POST OR TO WOVEN WIRE, WHICH IS IN TURN ATTACHED TO THE STEEL FENCE POST. THERE SHALL BE A 3 FOOT OVERLAP, SECURELY FASTENED WHERE ENDS OF FABRIC MEET.
5. INSPECTION SHALL BE MADE AS SPECIFIED IN THE SWPPP. REPAIR OR REPLACEMENT SHALL BE MADE AS PROMPTLY AS NEEDED.
6. SILT FENCE SHALL BE REMOVED WHEN FINAL STABILIZATION IS ACHIEVED OR ANOTHER EROSION OR SEDIMENT CONTROL DEVICE IS EMPLOYED.
7. ACCUMULATED SILT SHALL BE REMOVED WHEN IT REACHES A DEPTH OF HALF THE HEIGHT OF THE FENCE. THE SILT SHALL BE DISPOSED OF AT AN APPROVED SITE AND IN SUCH A MANNER AS TO NOT CONTRIBUTE TO ADDITIONAL SILTATION.

3 SILT FENCE
NOT TO SCALE

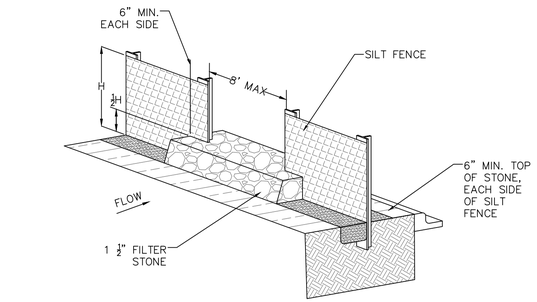

NOTE:

1. STONE OVERFLOW STRUCTURES OR OTHER OUTLET CONTROL DEVICES SHALL BE INSTALLED AT ALL LOW POINTS ALONG THE FENCE OR EVERY 300 FEET IF THERE IS NO APPARENT LOW POINT.
2. EROSION CONTROL MEASURES MAY ONLY BE PLACED IN FRONT OF INLETS, IN CHANNELS, DRAINAGEWAYS, OR BORROW DITCHES AT RISK OF CONTRACTOR. CONTRACTOR SHALL REMAIN LIABLE FOR ANY DAMAGE CAUSED BY THE MEASURES, INCLUDING FLOODING DAMAGE, WHICH MAY OCCUR DUE TO BLOCKED DRAINAGE. AT THE CONCLUSION OF ANY PROJECT, ALL CHANNELS, DRAINAGEWAYS, AND BORROW DITCHES IN THE WORK ZONE SHALL BE DREDGED OF ANY SEDIMENT GENERATED BY THE PROJECT OR DEPOSITED AS A RESULT OF EROSION CONTROL MEASURES.

5 SILT FENCE STONE OVERFLOW STRUCTURE
NOT TO SCALE

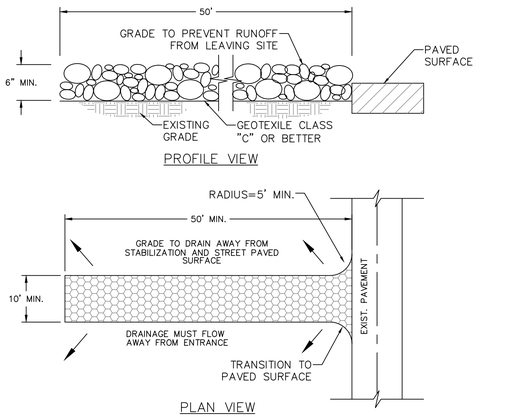

PROFILE VIEW

PLAN VIEW

GENERAL NOTES:

1. STONE SHALL BE 3 TO 5 INCH DIAMETER COARSE AGGREGATE.
2. LENGTH SHALL BE AS SPECIFIED IN THE SWPPP.
3. THE THICKNESS SHALL NOT BE LESS THAN 12 INCHES.
4. THE WIDTH SHALL BE NO LESS THAN THE FULL WIDTH OF ALL POINTS OF INGRESS OR EGRESS.
5. WHEN NECESSARY, VEHICLES SHALL BE CLEANED TO REMOVE SEDIMENT PRIOR TO ENTRANCE ONTO A PUBLIC ROADWAY. WHEN WASHING IS REQUIRED, IT SHALL BE DONE ON AN AREA STABILIZED WITH CRUSHED STONE WITH DRAINAGE FLOWING AWAY FROM BOTH THE STREET AND THE STABILIZED ENTRANCE. ALL SEDIMENT SHALL BE PREVENTED FROM ENTERING ANY STORM DRAIN, DITCH, OR WATERCOURSE USING APPROVED METHODS.
6. THE ENTRANCE SHALL BE MAINTAINED IN A CONDITION WHICH WILL PREVENT TRACKING OR FLOWING OF SEDIMENT ONTO PAVED SURFACES. THIS MAY REQUIRE PERIODIC TOP DRESSING WITH ADDITIONAL STONE AS CONDITIONS DEMAND. ALL SEDIMENT SPILLED, DROPPED, WASHED, OR TRACKED ONTO PAVED SURFACES, MUST BE REMOVED IMMEDIATELY.
7. THE ENTRANCE MUST BE PROPERLY GRADED OR INCORPORATE A DRAINAGE SWALE TO PREVENT RUNOFF FROM LEAVING THE CONSTRUCTION SITE.
8. PREVENT SHORTCUTTING OF THE FULL LENGTH OF THE CONSTRUCTION ENTRANCE BY INSTALLING BARRIERS AS NECESSARY.
9. INSPECTION SHALL BE AS SPECIFIED IN THE SWPPP.

2 CONSTRUCTION ENTRANCE
NOT TO SCALE

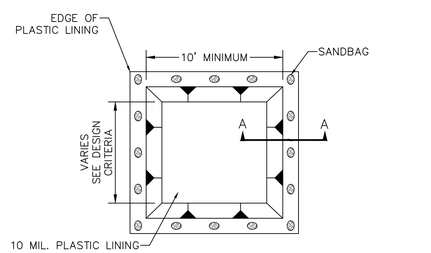

CONCRETE WASHOUT PLAN VIEW
NOT TO SCALE

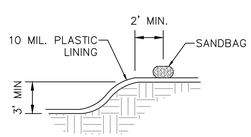

CONCRETE WASHOUT SECTION A–A
NOT TO SCALE

4 CONCRETE WASHOUT
NOT TO SCALE

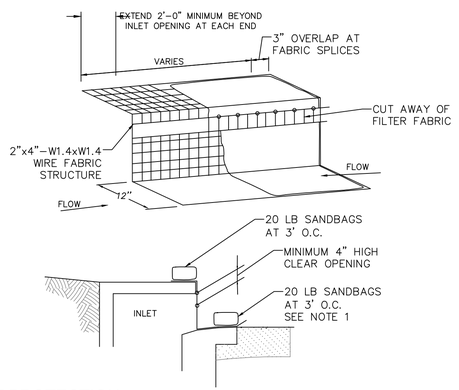

GENERAL NOTES:

1. WHERE MINIMUM CLEARANCES CAUSE TRAFFIC TO DRIVE IN THE GUTTER, THE CONTRACTOR MAY SUBSITITUTE A 1" X 4" BOARD SECURED WITH CONCRETE NAILS 3' O.C. NAILED INTO THE GUTTER IN LIEU OF SANDBAGS TO HOLD THE FILTER DIKE IN PLACE. UPON REMOVAL, CLEAN ANY DIRT/DEBRIS FROM NAILING LOCATIONS, APPLY CHEMICAL SANDING AGENT AND APPLY NON–SHRINK GROUT FLUSH WITH SURFACE OF GUTTER.
2. A SECTION OF FILTER FABRIC SHALL BE REMOVED AS SHOWN ON THIS DETAIL OR AS DIRECTED BY THE ENGINEER OR DESIGNATED REPRESENTATIVE. FABRIC MUST BE SECURED TO WIRE BACKING WITH CLIPS OR HOG RINGS AT THIS LOCATION.
3. DAILY INSPECTION SHALL BE MADE BY THE CONTRACTOR AND SILT ACCUMULATION MUST BE REMOVED WHEN DEPTH REACHES 2".
4. CONTRACTOR SHALL MONITOR THE PERFORMANCE OF INLET PROTECTION DURING EACH RAINFALL EVENT AND IMMEDIATELY REMOVE THE INLET PROTECTIONS IF THE STORM–WATER BEGINS TO OVERTOP THE CURB.
5. INLET PROTECTIONS SHALL BE REMOVED AFTER ACCEPTANCE OF PUBLIC FACILITIES.

1 INLET PROTECTION
NOT TO SCALE

THE RESERVES AT MAGNOLIA
DENTON, TEXAS
PRIVATE EROSION CONTROL DETAILS

mma
civil engineering surveying landscape architecture planning
tbpels registration number: f – 2759
tbpels registration/license number: 10088000
519 east border
arlington, texas 76010
817–469–1671
fax: 817–274–8757
www.mmatexas.com

5/16/2023
STATE OF TEXAS
ROBERT J. CRONIN JR.
122288
LICENSED PROFESSIONAL ENGINEER

PROJECT NUMBER:	3597–00–02
PROJECT MANAGER:	R. CRONIN
DRAWN BY:	G. SANCHEZ
CHECKED BY:	A. TAYLOR
ISSUE DATE:	5/16/2023

REV.	DATE	DESCRIP.	BY

SHEET CONTENT:
PRIVATE EROSION CONTROL DETAILS

SHEET NO:
C11.9

COPYRIGHT © 2023 MMA, INC.

PLOTTED BY: ISIS HERNANDEZ DATE: 5/16/2023 11:37 AM PATH: P:\3597-00-02\700 Land Development\703 Construction Documents\Dwsg\Pvt Sheets\CONSTRUCTION DETAILS.dwg

METER VAULT INSTALLATION NOTES:

1. PIPE, METER SIZE AND VAULT SHALL BE APPROVED BY THE WATER UTILITIES DEPARTMENT DURING REVIEW PROCESS.

2. PREFABRICATED OR POURED IN PLACE VAULTS SHALL HAVE PRE CAST–CLASS H OR POURED–CLASS S CONCRETE, REINFORCED WITH MINIMUM #4 O.C.E.W.

3. METER VAULT MUST BE LOCATED BEHIND CURB AND OUT OF VEHICLE/PEDESTRIAN TRAFFIC, IN THE WATER UTILITY EASEMENT OR PUBLIC R.O.W. EASEMENT OR R.O.W. AREA MUST ACCOMMODATE A MINIMUM 30" BEYOND EACH SIDE OF THE VAULT. METER VAULT TO BE PLACED IN A PROTECTED GRASSY AREA.

4. MAINLINE AND BYPASS VALVES WILL BE RESILIENT SEAT TYPE WITH CORROSION RESISTANT FUSION BONDED EPOXY COATING INSIDE AND OUT, NON–RISING STEM. ALL VALVES IN THE VAULT WILL HAVE HANDWHEELS. CUSTOMER VALVES SHALL BE LOCATED OUTSIDE OF VAULT AND EASEMENTS. ALL VALVES SHALL BE RIGHT–HAND TURN CLOSE.

5. ALL METERS SHALL BE EQUIPPED WITH ENCODER REGISTERS AND HAVE TOUCH PADS INSTALLED ON THE LID FOR READING PURPOSES. ALL METERS SHALL BE INSTALLED WITH STRAINERS ON THE INLET SIDE OF THE METER.

6. HATCH OPENING WILL BE ¾" ALUMINUM DIAMOND PLATE COVER WITH EXTRUDED ALUMINUM FRAME. HATCH TO BE FURNISHED WITH TYPE 316 STAINLESS STEEL SNAP AND LOCK WITH BRASS HINGES.

7. ALL VAULTS OVER 4 FT. IN DEPTH SHALL HAVE A LADDER INSTALLED AND SECURED TO THE VAULT WALL AT HATCH ENTRY.

8. VAULT BEDDING SHALL BE GRADE 4 STANDARD CRUSHED AGGREGATE, 1 IN. SIEVE.

9. THE TOP OF METER VAULT SHALL BE SET AT AN ELEVATION SUCH THAT THE SURROUNDING GROUND SLOPES AWAY FROM THE VAULT.

10. FOR 3" METERS AND ABOVE ON PROJECTS ON WHICH THE CITY INSTALLS THE TAP IN THE MAINLINE AND STUBS OUT THE SERVICE LINE TO THE BACK OF CURB, THE CONTRACTOR IS RESPONSIBLE FOR INSTALLATION OF ALL REMAINING PIPING FROM THE STUBOUT BEHIND THE CURB THROUGH THE VAULT.

11. FOR WATER METER VAULT INSTALLATIONS WHERE THE METER IS NOT EQUIPPED WITH AN INTEGRAL TEST PORT, A SEPARATE SPOOL PIECE WILL BE PROVIDED BETWEEN THE METER AND THE DOWNSTREAM GATE VALVE. THE SPOOL PIECE WILL BE EQUIPPED WITH A TEST PORT AND THREADED BRASS PLUG SIZED PER THE MANUFACTURER'S REQUIREMENTS OR AS FOLLOWS:

12. WHERE NOT SPECIFICALLY NOTED, ALL FLANGED PIPE SHALL BE DUCTILE IRON PIPE WITH DUCTILE IRON FLANGES THREADED ON.

METER SIZE	TEST PORT
3"	1½"
4"	2"
6"	3"
>8"	3"

WATER VAULT INSTALLATION NOTES

W100

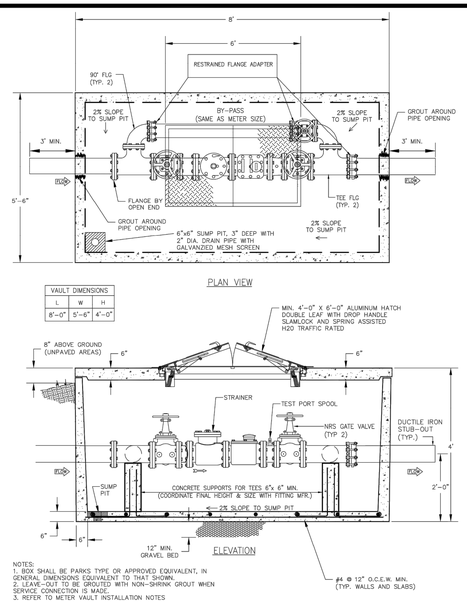

NOTES:
1. BOX SHALL BE PARKS TYPE OR APPROVED EQUIVALENT, IN GENERAL DIMENSIONS EQUIVALENT TO THAT SHOWN.
2. LEAVE–OUT TO BE GROUTED WITH NON–SHRINK GROUT WHEN SERVICE CONNECTION IS MADE.
3. REFER TO METER VAULT INSTALLATION NOTES

3" AND 4" METER VAULTS

W101

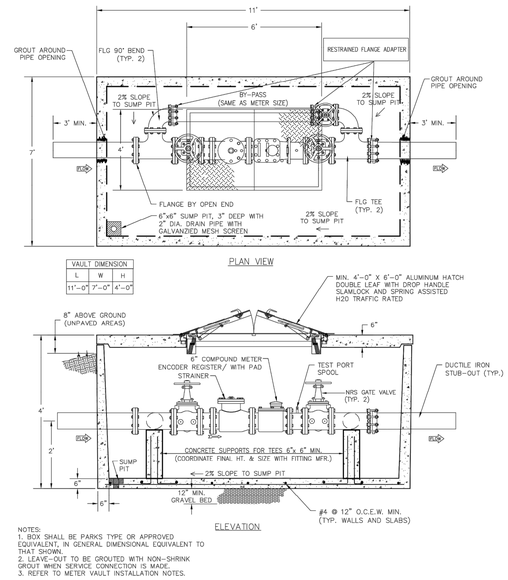

NOTES:
1. BOX SHALL BE PARKS TYPE OR APPROVED EQUIVALENT, IN GENERAL DIMENSIONAL EQUIVALENT TO THAT SHOWN.
2. LEAVE–OUT TO BE GROUTED WITH NON–SHRINK GROUT WHEN SERVICE CONNECTION IS MADE.
3. REFER TO METER VAULT INSTALLATION NOTES.

6" METER VAULT

W102

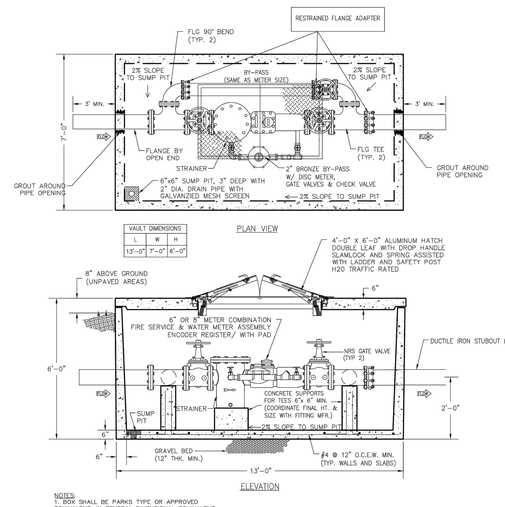

NOTES:
1. BOX SHALL BE PARKS TYPE OR APPROVED EQUIVALENT, IN GENERAL DIMENSIONAL EQUIVALENT TO THAT SHOWN.
2. LEAVE–OUT TO BE GROUTED WITH NON–SHRINK GROUT WHEN SERVICE CONNECTION IS MADE.
3. REFER TO METER VAULT INSTALLATION NOTES

6" AND 8" FIRE SERVICE METER VAULTS

W103

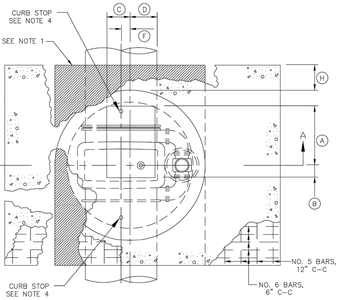

GATE VALVE SIZE	DIMENSION TABLE											
	A	B	C	D	E	F	G	H	J	K	L	M
16"	20"	20"	12"	12"	44 1/2"	1"	48"	12"	10"	24"	12"	16"
18"	20"	20"	12"	12"	51 3/8"	2"	48"	12"	12"	24"	12"	18"
20"	22"	18"	12"	12"	56 5/8"	1"	54"	12"	12"	24"	16"	20"
24"	26"	14"	12"	12"	64 3/8"	1"	60"	18"	14"	30"	18"	24"
30"	28"	12"	12"	12"	80 5/8"	3"	66"	18"	18"	30"	20"	30"

NOTES:
1. POLYURETHANE CUSHION PAD.
2. FOR 24" AND LARGER VALVES, PROVIDE SPUR GEAR AND VAULT.
3. FOR 30" AND LARGER VALVES, PROVIDE AND INTEGRALLY CAST BYPASS.
4. PROVIED 2" CORPORATION AND CURB STOPS A MAX. OF 12" FROM EACH END OF GATE VALVE.

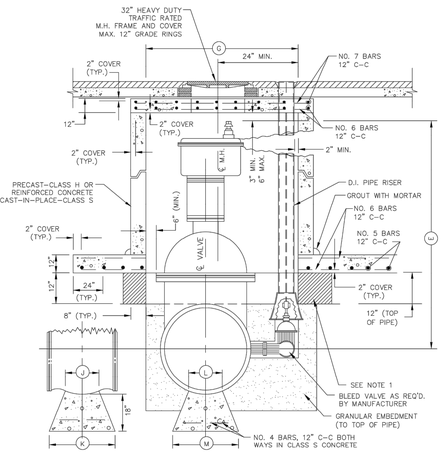

SECTION A–A

VAULT CONSTRUCTION VERTICAL GATE VALVE 24" AND LARGER

W104 W105

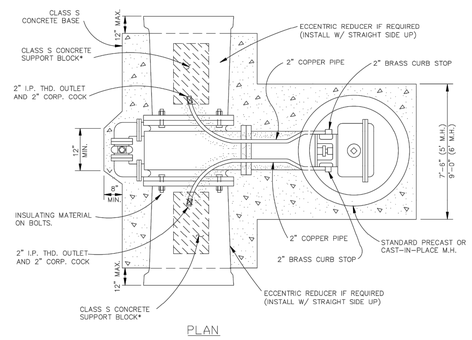

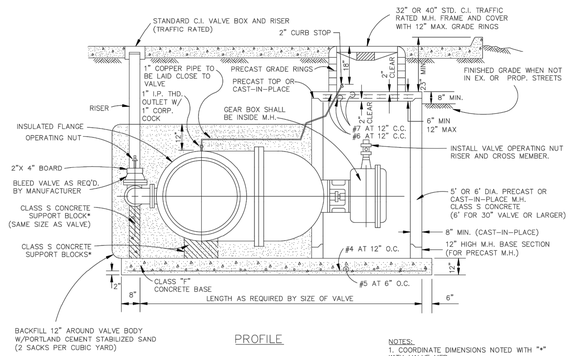

NOTES:
1. COORDINATE DIMENSIONS NOTED WITH "*" WITH VALVE MFR.
2. FOR 24" AND LARGER VALVES, PROVIDE SPUR GEAR AND VAULT.
3. FOR 30" AND LARGER VALVES, PROVIDE AND INTEGRALLY CAST BYPASS.

VAULT CONSTRUCTION HORIZONTAL GATE VALVE 24" AND LARGER

W106A W106B

ENTERED BY	PROJECT #	
DESIGNED BY	DATE	REVISION
CHECKED BY		
PROJ. ENGR.		
PATH S:\Water Engineering\Engr\Design\Projects\Standard Details\water details\Water Details Sheet 1–3.dwg		

CITY OF DENTON
ENGINEERING SERVICES

STANDARD DETAILS

WATER DETAILS

DATE
JAN. 2023

SHEET No.
1 OF 24

SCALE
HOR 1"= N.T.S.
VER 1"= N/A

CERTIFICATION:
THIS CITY OF DENTON STANDARD DETAIL SHEET IS AUTHORIZED FOR USE IN THIS PROJECT BY THE ENGINEER WHOSE SEAL APPEARS HEREON, AND WHO CERTIFIES THE CONTENT OF THE DETAILS AND NOTES HEREIN HAVE NOT BEEN ALTERED AND ASSUMES RESPONSIBILITY FOR APPROPRIATE USE OF THE STANDARDS WITHIN THIS SHEET.

PUBLIC WATER DETAILS C12.0

PLOTTED BY: IBS HERNANDEZ DATE: 3/16/2023 11:58 AM PATH: P:\2017-00-00700 Land Development\03 Construction Documents\Design\Plot Sheet\PUBLIC DETAILS.dwg

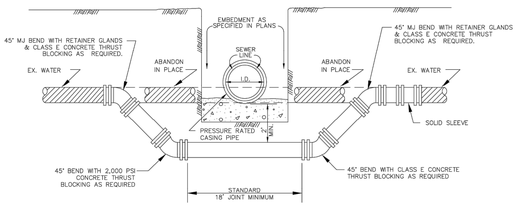

NOTES:
1. ONE SEGMENT OF THE WASTEWATER LINE SHALL BE CENTERED OVER THE WATER LINE SUCH THAT THE JOINTS OF THE WASTEWATER LINE ARE EQUIDISTANT AND AT LEAST NINE FEET HORIZONTALLY FROM THE CENTERLINE OF THE WATER LINE.
2. WASTEWATER PIPE MUST BE PRESSURE RATED ACCORDING TO TCEQ 217.53.5.B OR BE ENCASED IN A PRESSURE RATED CASING PIPE ACCORDING TO TCEQ 217.53.5.A.
3. WATER AND WASTEWATER LINES MUST PASS A PRESSURE AND LEAKAGE TEST PER CITY OF DENTON SPEC. SECTION 33 01 10.

EXISTING WATER MAIN LOWERING UNDER NEW SANITARY SEWER

W301

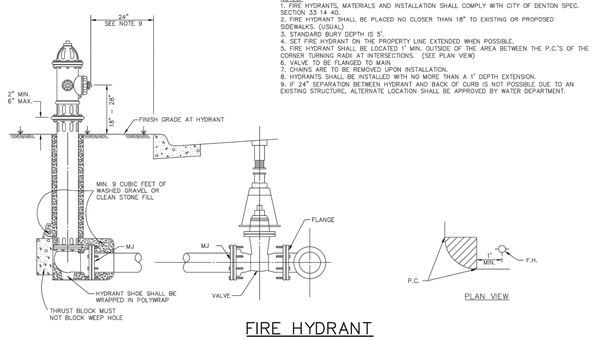

NOTES:
1. FIRE HYDRANTS, MATERIALS AND INSTALLATION SHALL COMPLY WITH CITY OF DENTON SPEC. SECTION 33 14 40.
2. FIRE HYDRANT SHALL BE PLACED NO CLOSER THAN 18" TO EXISTING OR PROPOSED SIDEWALKS. (USUAL)
3. STANDARD BURY DEPTH IS 5'.
4. SET FIRE HYDRANT ON THE PROPERTY LINE EXTENDED WHEN POSSIBLE.
5. FIRE HYDRANT SHALL BE LOCATED 1' MIN. OUTSIDE OF THE AREA BETWEEN THE P.C.'S OF THE CORNER TURNING RADII AT INTERSECTIONS. (SEE PLAN VIEW)
6. VALVE TO BE FLANGED TO MAIN.
7. CHAINS ARE TO BE REMOVED UPON INSTALLATION.
8. HYDRANTS SHALL BE INSTALLED WITH NO MORE THAN A 1' DEPTH EXTENSION.
9. IF 24" SEPARATION BETWEEN HYDRANT AND BACK OF CURB IS NOT POSSIBLE DUE TO AN EXISTING STRUCTURE, ALTERNATE LOCATION SHALL BE APPROVED BY WATER DEPARTMENT.

FIRE HYDRANT INSTALLATION

W401A

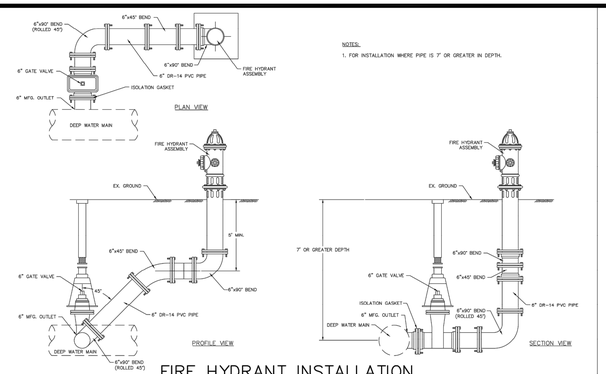

NOTES:
1. FOR INSTALLATION WHERE PIPE IS 7' OR GREATER IN DEPTH.

FIRE HYDRANT INSTALLATION SWIVEL/DEEP MAIN INSTALLATION

W401B

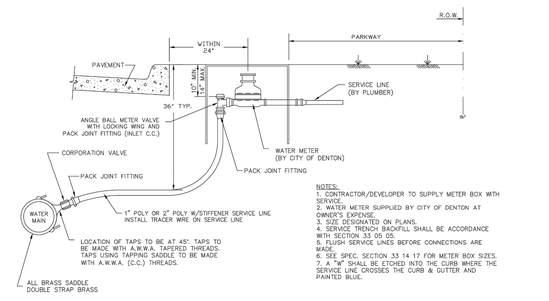

NOTES:
1. CONTRACTOR/DEVELOPER TO SUPPLY METER BOX WITH SERVICE.
2. WATER METER SUPPLIED BY CITY OF DENTON AT OWNER'S EXPENSE.
3. SIZE DESIGNATED ON PLANS.
4. SERVICE TRENCH BACKFILL SHALL BE ACCORDANCE WITH SECTION 33 05 05.
5. FLUSH SERVICE LINES BEFORE CONNECTIONS ARE MADE.
6. SEE SPEC. SECTION 33 14 17 FOR METER BOX SIZES.
7. A "W" SHALL BE ETCHED INTO THE CURB WHERE THE SERVICE LINE CROSSES THE CURB & GUTTER AND PAINTED BLUE.

TYPICAL WATER SERVICE CONNECTION

W501A

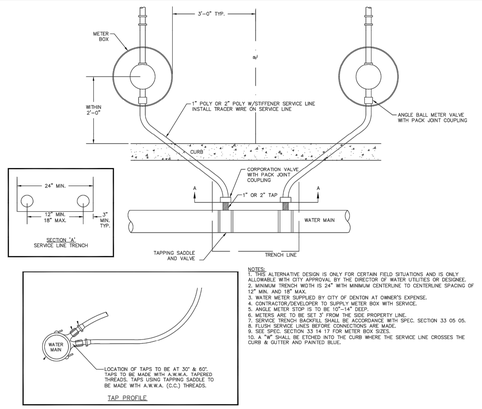

NOTES:
1. THIS ALTERNATIVE DESIGN IS ONLY FOR CERTAIN FIELD SITUATIONS AND IS ONLY ALLOWABLE WITH CITY APPROVAL BY THE DIRECTOR OF WATER UTILITIES OR DESIGNEE.
2. MINIMUM TRENCH WIDTH IS 24" WITH MINIMUM CENTERLINE TO CENTERLINE SPACING OF 12" MIN. AND 18" MAX.
3. WATER METER SUPPLIED BY CITY OF DENTON AT OWNER'S EXPENSE.
4. SERVICE TRENCH BACKFILL SHALL BE IN PLACE BOX WITH SERVICE.
5. ANGLE METER STOP IS TO BE 10"-14" DEEP.
6. METERS ARE TO BE SET 3' FROM THE SIDE PROPERTY LINE.
7. SERVICE TRENCH BACKFILL SHALL BE ACCORDANCE WITH SPEC. SECTION 33 05 05.
8. FLUSH SERVICE LINES BEFORE CONNECTIONS ARE MADE.
9. SEE CITY OF DENTON SPEC. SECTION 33 14 17 FOR METER BOX SIZES.
10. A "W" SHALL BE ETCHED INTO THE CURB WHERE THE SERVICE LINE CROSSES THE CURB & GUTTER AND PAINTED BLUE.

DUAL WATER SERVICE CONNECTION WITH 1" INSTALLATION

*** WITH CITY APPROVAL ONLY**

W501B

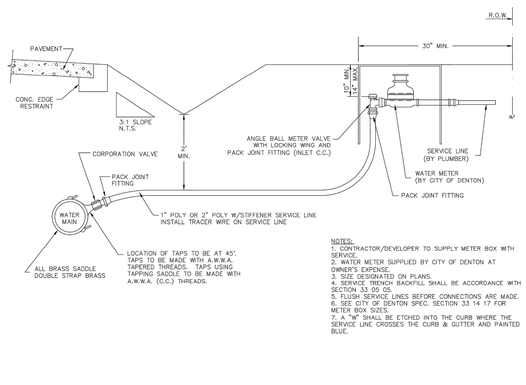

NOTES:
1. CONTRACTOR/DEVELOPER TO SUPPLY METER BOX WITH SERVICE.
2. WATER METER SUPPLIED BY CITY OF DENTON AT OWNER'S EXPENSE.
3. SIZE DESIGNATED ON PLANS.
4. SERVICE TRENCH BACKFILL SHALL BE ACCORDANCE WITH SECTION 33 05 05.
5. FLUSH SERVICE LINES BEFORE CONNECTIONS ARE MADE.
6. SEE CITY OF DENTON SPEC. SECTION 33 14 17 FOR METER BOX SIZES.
7. A "W" SHALL BE ETCHED INTO THE CURB WHERE THE SERVICE LINE CROSSES THE CURB & GUTTER AND PAINTED BLUE.

RURAL/SUBURBAN WATER SERVICE CONNECTION

W501C

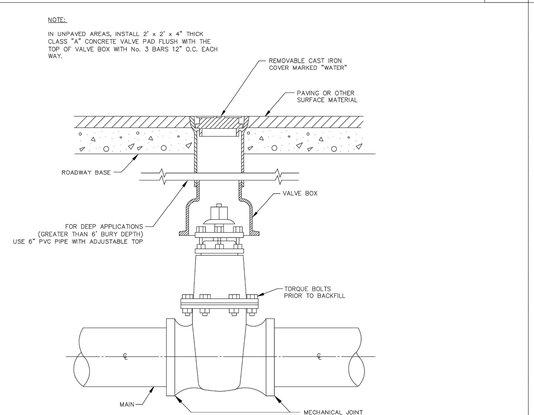

DIRECT BURY GATE VALVE (4" TO 20") BOX

W601

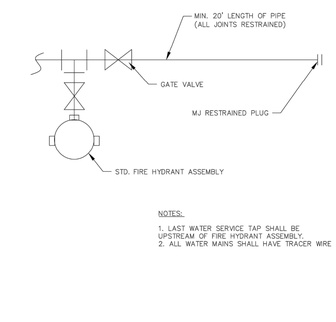

NOTES:
1. LAST WATER SERVICE TAP SHALL BE UPSTREAM OF FIRE HYDRANT ASSEMBLY.
2. ALL WATER MAINS SHALL HAVE TRACER WIRE

WATER MAIN TERMINATION ASSEMBLY

W603

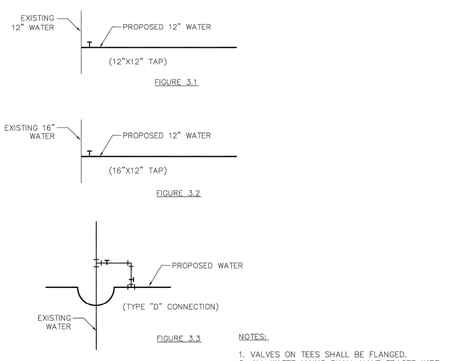

NOTES:
1. VALVES ON TEES SHALL BE FLANGED.
2. ALL WATER MAINS SHALL HAVE TRACER WIRE.

TYPICAL TAPPING SLEEVE AND VALVE AND "D" CONNECTION

PIAZ13

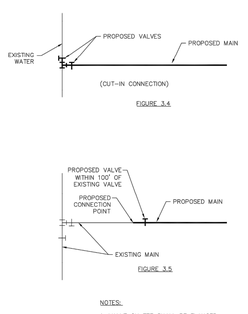

NOTES:
1. VALVE ON TEE SHALL BE FLANGED.
2. ALL WATER MAINS SHALL HAVE TRACER WIRE.

TYPICAL CUT-IN CONNECTIONS

PIAZ14

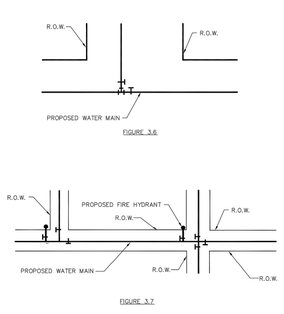

NOTES:
1. VALVES ON TEES SHALL BE FLANGED.
2. ALL WATER MAINS SHALL HAVE TRACER WIRE.

TYPICAL VALVE PLACEMENT

PIAZ15

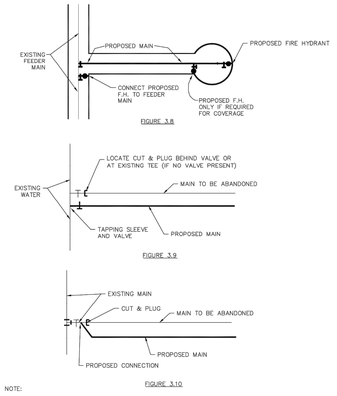

NOTE:
ALL WATER MAINS SHALL HAVE TRACER WIRE.

TYPICAL LINE REPLACEMENT OR EXTENSION

PIAZ16

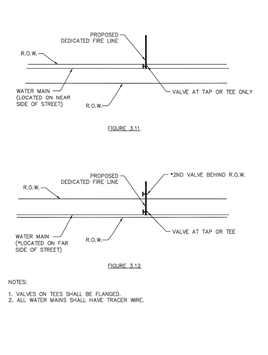

NOTES:
1. VALVES ON TEES SHALL BE FLANGED.
2. ALL WATER MAINS SHALL HAVE TRACER WIRE.

DEDICATED FIRE LINE CONNECTION AND VALVE PLACEMENT

PIAZ17

ENTERED BY	PROJECT #	
DESIGNED BY	DATE	REVISION
CHECKED BY		
PROJ. ENGR.		
PATH S:\Water Engineering\Engr\Design\Projects\Standard Details\water details\Water Details Sheet 1-3.dwg		

CITY OF DENTON
ENGINEERING SERVICES

STANDARD DETAILS

WATER DETAILS

DATE
JAN. 2023

SHEET No.
2 OF 24

SCALE
HOR 1"= N.T.S.
VER 1"= N/A

CERTIFICATION:
THIS CITY OF DENTON STANDARD DETAIL SHEET IS AUTHORIZED FOR USE IN THIS PROJECT BY THE ENGINEER WHOSE SEAL APPEARS HEREON, AND WHO CERTIFIES THE CONTENT OF THE DETAILS AND NOTES HEREIN HAVE NOT BEEN ALTERED AND ASSUMES RESPONSIBILITY FOR APPROPRIATE USE OF THE STANDARDS WITHIN THIS SHEET.

PLOTTED BY: ISIS HERNANDEZ DATE: 2/16/2023 11:38 AM PATH: P:\SSP-00700 Land Development\103 Construction Documents\Design\Plot Sheets\PUBLIC DETAILS.dwg

GENERAL NOTES FOR ALL THRUST BLOCKS:

1. RESTRAINED JOINTS SHALL BE REQUIRED FOR ALL WATER MAINS 16" AND LARGER. JOINT RESTRAINT SHALL BE DESIGNED TO ACCOMMODATE THE ENTIRE DESIGN LOAD AS INDICATED IN THE APPLICABLE PIPE MATERIAL SPECIFICATION. THRUST BLOCKING SHALL BE PROVIDED ON ALL FITTINGS AND DEAD-ENDS FOR PIPE 24" AND SMALLER.

2. CONCRETE FOR BLOCKING SHALL BE CLASS B.

3. ALL CALCULATIONS ARE BASED ON INTERNAL PRESSURE OF 200 PSI FOR DUCTILE IRON, P.V.C., AND 150 PSI FOR CONCRETE PIPE.

4. VOLUMES OF THRUST BLOCKS ARE NET VOLUMES OF CONCRETE TO BE FURNISHED. THE CORRESPONDING WEIGHT OF THE CONCRETE (CLASS B) IS EQUAL TO OR GREATER THAN THE VERTICAL COMPONENT OF THE THRUST ON THE VERTICAL BEND.

5. WALL THICKNESS (T) ASSUMED HERE FOR ESTIMATING PURPOSES ONLY.

6. THE SOIL BEARING PRESSURES ARE BASED ON 1,000 LBS./S.F. IN SOIL AND 2,000 LBS./S.F. IN ROCK.

7. POUR CONCRETE FOR BLOCK AGAINST UNDISTURBED EARTH.

8. DIMENSIONS MAY BE VARIED AS REQUIRED BY FIELD CONDITIONS AND AS DIRECTED BY THE CITY. THE VOLUME OF CONCRETE BLOCKING SHALL NOT BE LESS THAN SHOWN HERE.

9. USE POLYETHYLENE WRAP OR EQUAL AS BOND BREAKER BETWEEN CONCRETE AND BEND, TEE, OR PLUG.

10. CONCRETE SHALL NOT EXTEND BEYOND JOINTS.

THRUST BLOCK GENERAL NOTES

W700

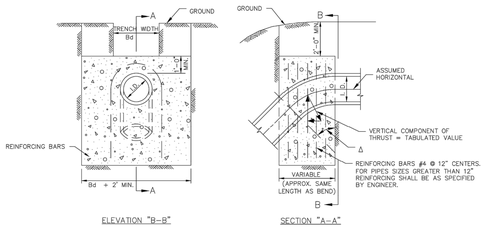

NOTES:
1. EXTEND CONCRETE THRUST BLOCK HORIZONTALLY INTO UNDISTURBED SOIL 2' MIN. ON EACH SIDE.
2. HORIZONTAL EXTENSION OF THRUST BLOCK MAY REQUIRE ADDITIONAL STEEL REINFORCEMENT. DETERMINATION TO BE MADE BY CITY ENGINEERING STAFF.

Δ →	11.25°		22.50°		30°		45°		67.50°		90°		← Δ
I.D. (IN.)	THRUST (TONS)	VOL. (C.Y.)	THRUST (TONS)	VOL. (C.Y.)	THRUST (TONS)	VOL. (C.Y.)	THRUST (TONS)	VOL. (C.Y.)	THRUST (TONS)	VOL. (C.Y.)	THRUST (TONS)	VOL. (C.Y.)	I.D. (IN.)
4,6,8	1.0	0.5	2.0	1.0	2.5	1.3	3.6	1.8	4.6	2.3	5.0	2.5	4,6,8
10,12	2.2	1.1	4.3	2.2	5.7	2.8	8.0	4.0	10.5	5.2	11.3	5.7	10,12
16,18	5.0	2.5	9.7	4.9	12.7	6.4	18.0	9.0	23.5	11.8	25.5	12.7	16,18
20	6.1	3.1	12.0	6.0	15.7	7.9	22.2	11.1	29.2	14.5	31.4	15.7	20
24	8.2	4.4	17.3	8.7	22.6	11.3	32.0	16.0	41.8	20.9	45.2	22.6	24

VERTICAL THRUST BLOCK AT PIPE BEND

W701

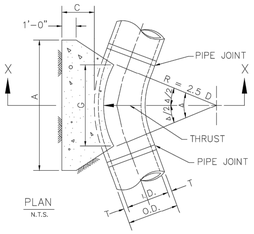

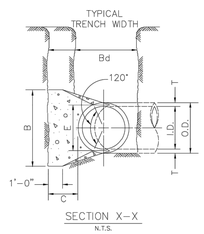

I.D. (IN.)	T (IN.)	Δ = 11.25° (FT.)	Δ = 22.50° (FT.)	E (FT.)
4,6,8	0.4	1.5	1.5	0.9
10,12	0.5	1.5	1.5	1.2
16,18	0.6	1.5	1.5	1.6
20	0.7	1.5	1.5	1.8
24	0.9	1.5	1.5	2.1

TABLES OF DIMENSIONS AND QUANTITIES

	Δ = 11.25°								Δ= 22.50°							
			EARTH			ROCK					EARTH			ROCK		
I.D. (IN.)	G (FT.)	THRUST (TONS)	A (FT.)	B (FT.)	VOL. (C.Y.)	A (FT.)	B (FT.)	VOL. (C.Y.)	I.D. (IN.)	G (FT.)	THRUST (TONS)	A (FT.)	B (FT.)	VOL. (C.Y.)	A (FT.)	B (FT.)	VOL. (C.Y.)
4,6,8	0.4	1.0	1.0	1.5	0.1	1.0	1.0	0.1	4,6,8	0.8	2.0	1.5	1.5	0.1	1.0	1.0	0.1
10,12	0.6	2.2	1.5	1.5	0.1	1.0	1.5	0.1	10,12	1.1	4.4	2.0	2.5	0.3	1.5	1.5	0.1
16,18	0.8	5.0	2.0	2.5	0.3	1.5	2.0	0.2	16,18	1.6	9.9	3.0	3.5	0.6	2.0	2.5	0.3
20	0.9	6.2	2.0	3.5	0.4	1.5	3.0	0.3	20	1.8	12.3	3.5	3.5	0.7	2.0	3.0	0.4
24	1.1	8.9	3.0	3.5	0.5	1.5	3.0	0.3	24	2.2	17.7	4.0	4.5	1.0	3.0	3.5	0.5

TABLES OF DIMENSIONS AND QUANTITIES

	Δ = 30°								Δ = 45°							
			EARTH			ROCK					EARTH			ROCK		
I.D. (IN.)	G (FT.)	THRUST (TONS)	A (FT.)	B (FT.)	VOL. (C.Y.)	A (FT.)	B (FT.)	VOL. (C.Y.)	I.D. (IN.)	G (FT.)	THRUST (TONS)	A (FT.)	B (FT.)	VOL. (C.Y.)	A (FT.)	B (FT.)	VOL. (C.Y.)
4,6,8	1.0	2.6	2.0	1.5	0.2	1.0	1.5	0.1	4,6,8	1.5	3.9	2.0	2.0	0.2	1.5	1.5	0.1
10,12	1.5	5.9	2.5	2.5	0.3	2.0	1.5	0.2	10,12	2.2	8.7	3.5	2.5	0.5	2.0	2.5	0.3
16,18	2.2	13.2	3.5	4.0	0.8	2.5	3.0	0.4	16,18	3.2	19.5	4.5	4.5	1.2	3.0	3.5	0.6
20	2.4	16.3	4.5	4.0	1.0	3.0	3.0	0.5	20	3.6	24.1	5.5	4.5	1.5	3.5	3.5	0.7
24	2.9	23.4	6.0	4.0	1.4	3.5	3.5	0.7	24	4.3	34.6	8.0	4.5	2.3	4.5	4.0	1.1

	Δ = 67.50°								Δ = 90°							
			EARTH			ROCK					EARTH			ROCK		
I.D. (IN.)	G (FT.)	THRUST (TONS)	A (FT.)	B (FT.)	VOL. (C.Y.)	A (FT.)	B (FT.)	VOL. (C.Y.)	I.D. (IN.)	G (FT.)	THRUST (TONS)	A (FT.)	B (FT.)	VOL. (C.Y.)	A (FT.)	B (FT.)	VOL. (C.Y.)
4,6,8	2.1	5.6	3.0	2.0	0.3	2.0	1.5	0.2	4,6,8	2.7	7.1	5.0	1.5	0.4	2.0	2.0	0.2
10,12	3.1	12.6	5.5	2.5	0.8	3.5	2.0	0.4	10,12	4.0	16.0	6.5	2.5	1.0	3.5	2.5	0.5
16,18	4.7	28.3	7.5	4.0	1.9	5.5	3.0	0.9	16,18	6.0	36.0	9.0	4.0	2.4	4.5	4.0	1.0
20	5.2	34.9	9.0	4.0	2.3	5.5	3.5	1.2	20	6.6	44.4	10.0	4.5	3.1	6.0	4.0	1.5
24	6.2	50.3	11.5	4.5	3.5	6.5	4.0	1.6	24	7.9	64.0	14.5	4.5	5.0	8.0	4.0	2.1

TABLES OF DIMENSIONS AND QUANTITIES

HORIZONTAL THRUST BLOCK AT PIPE BEND

W702A W702B W702C

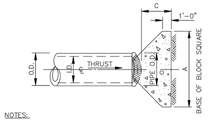

NOTES:
1. SAME REQUIREMENTS APPLY TO ALL FIRE HYDRANT ELBOWS.

PLAN OF PLUG THRUST BLOCK

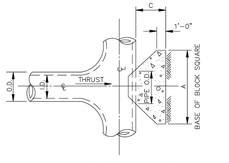

PLAN OF TEE THRUST BLOCK

			EARTH		ROCK	
I.D. (IN.)	THRUST (TONS)	C (FT.)	A (FT.)	VOL. (C.Y.)	A (FT.)	VOL. (C.Y.)
4,6,8	5.1	1.5	2.5	0.3	2.0	0.2
10,12	11.3	1.5	3.5	0.6	2.5	0.3
16,18	25.5	2.0	5.5	1.6	4.0	0.9
20	31.5	2.0	6.0	1.9	4.0	0.9
24	45.2	2.5	7.0	3.1	5.0	1.7

HORIZONTAL THRUST BLOCK AT TEES AND PLUGS

W703

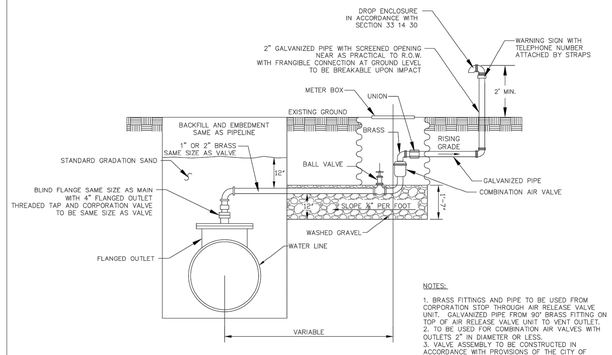

NOTES:
1. BRASS FITTINGS AND PIPE TO BE USED FROM CORPORATION STOP THROUGH AIR RELEASE VALVE UNIT. GALVANIZED PIPE FROM 90° BRASS FITTING ON TOP OF AIR RELEASE VALVE UNIT TO VENT OUTLET.
2. TO BE USED FOR COMBINATION AIR VALVES WITH OUTLETS 2" IN DIAMETER OR LESS.
3. VALVE ASSEMBLY TO BE CONSTRUCTED IN ACCORDANCE WITH PROVISIONS OF THE CITY OF DENTON SPEC. SECTION 33 14 30.

COMBINATION AIR VALVE ASSEMBLIES 1" AND 2"

W801

NOTES:
1. WHEN NOT IN PAVING OR WALK, A CLASS P1 CONCRETE PAD REINFORCED W/#3 BARS AT 12" C-C EACH WAY, SHALL EXTEND A MINIMUM OF 2' AROUND THE M.H. AND SHALL BE A MINIMUM OF 3" THICK.
2. VENT PIPE SIZE TO EQUAL OUTLET SIZE OF COMBINATION AIR VALVE.
3. MINIMUM M.H. DIA. TO BE 6'. 7' DIA. M.H. REQUIRED FOR VALVES 6" OR GREATER.
4. FLANGED CONNECTION TO WATER PIPE SHALL BE IN ACCORDANCE WITH CITY OF DENTON SPEC. SECTION 13 14 30 ACCORDING TO PIPE MATERIAL TYPE.

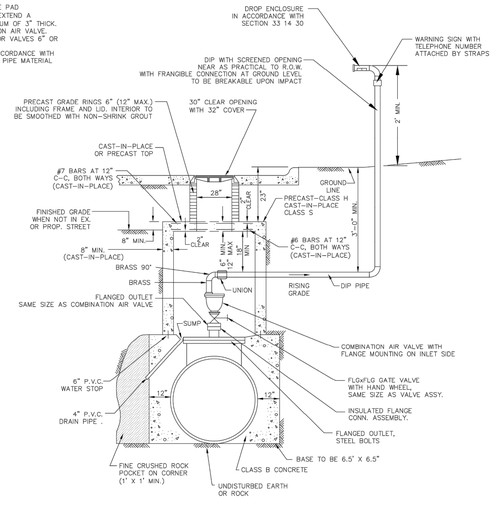

COMBINATION AIR VALVE ASSEMBLIES 3" AND LARGER

W802

ENTERED BY	PROJECT #		
DESIGNED BY	DATE	REVISION	
CHECKED BY			
PROJ. ENGR.			
PATH S:\Water Engineering\Engr\Design\Projects\Standard Details\water details\Water Details Sheet 1-3.dwg			

CITY OF DENTON
ENGINEERING SERVICES

STANDARD DETAILS

WATER DETAILS

DATE
JAN. 2023

SHEET No.
3 OF 24

SCALE
HOR 1"= N.T.S.
VER 1"= N/A

CERTIFICATION:
THIS CITY OF DENTON STANDARD DETAIL SHEET IS AUTHORIZED FOR USE IN THIS PROJECT BY THE ENGINEER WHOSE SEAL APPEARS HEREON, AND WHO CERTIFIES THE CONTENT OF THE DETAILS AND NOTES HEREIN HAVE NOT BEEN ALTERED AND ASSUMES RESPONSIBILITY FOR APPROPRIATE USE OF THE STANDARDS WITHIN THIS SHEET.

PUBLIC WATER DETAILS C12.2

PLOTTED BY: IRIS HERNANDEZ DATE: 2/16/2023 - 11:38 AM PATH: P:\SWP-ROADWAY\Land Development\PW Construction Documents\Design\Plot Sheets\PUBLIC DETAILS.dwg

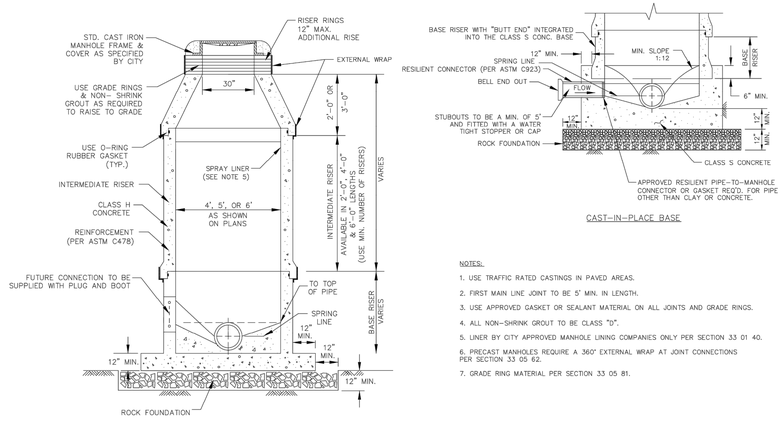

CAST-IN-PLACE BASE

NOTES:

1. USE TRAFFIC RATED CASTINGS IN PAVED AREAS.
2. FIRST MAIN LINE JOINT TO BE 5' MIN. IN LENGTH.
3. USE APPROVED GASKET OR SEALANT MATERIAL ON ALL JOINTS AND GRADE RINGS.
4. ALL NON-SHRINK GROUT TO BE CLASS "D".
5. LINER BY CITY APPROVED MANHOLE LINING COMPANIES ONLY PER SECTION 33 01 40.
6. PRECAST MANHOLES REQUIRE A 360° EXTERNAL WRAP AT JOINT CONNECTIONS PER SECTION 33 05 62.
7. GRADE RING MATERIAL PER SECTION 33 05 81.

PRE-CAST MANHOLE WITH LINING

S101

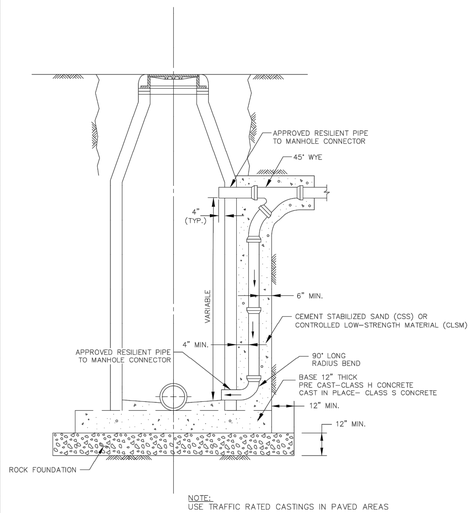

NOTE:
USE TRAFFIC RATED CASTINGS IN PAVED AREAS

DROP MANHOLE

S102

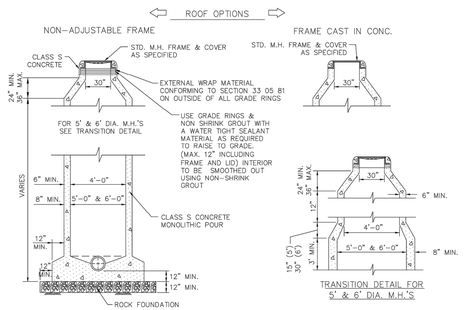

NOTES:

1. USE TRAFFIC RATED CASTINGS IN PAVED AREAS.
2. MANHOLE DIAMETER TO EXTEND FROM BASE TO BOTTOM OF CONE.
3. ALL NON-SHRINK GROUT TO BE CLASS D.
4. GRADE RING MATERIALS PER SECTION 33 05 81.

STUBOUT CONNECTION

CAST-IN-PLACE MANHOLE

S103

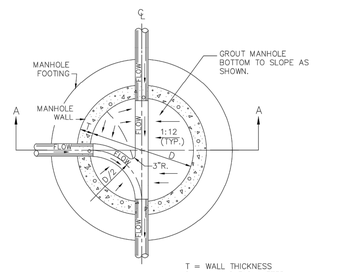

NOTE:
REFER TO MANHOLE STANDARD DRAWINGS FOR ADDITIONAL DETAIL OF MANHOLE

SEWERLINE INTERSECTION

S104

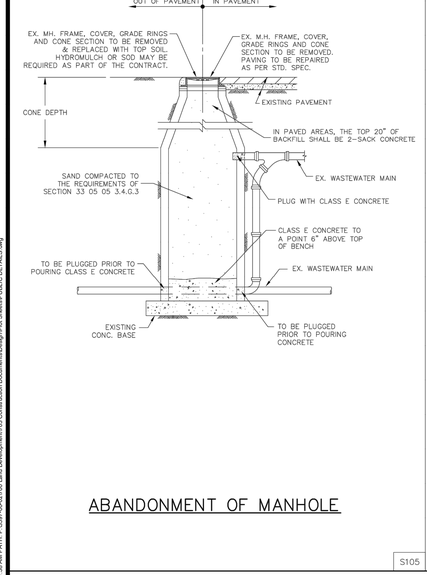

ABANDONMENT OF MANHOLE

S105

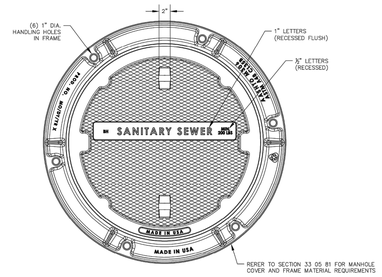

ASSEMBLY PLAN VIEW

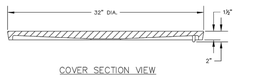

COVER SECTION VIEW

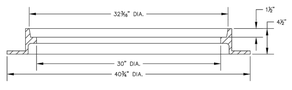

FRAME SECTION VIEW

MANHOLE FRAME AND COVER

S106A

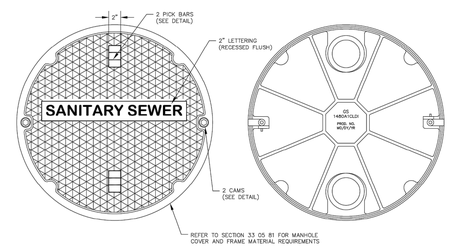

COVER PLAN VIEW COVER BOTTOM VIEW

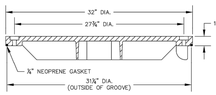

COVER SECTION VIEW

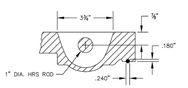

PICKBAR & GASKET GROOVE DETAIL

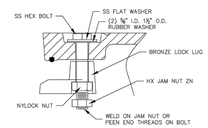

CAM DETAIL

WATERTIGHT MANHOLE COVER WITH CAM LOCKS AND GASKET

S106B

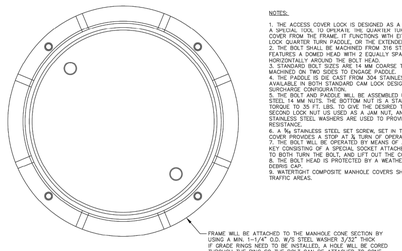

ASSEMBLY PLAN VIEW



COVER SECTION VIEW

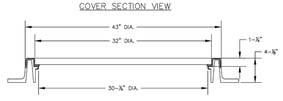

FRAME SECTION VIEW

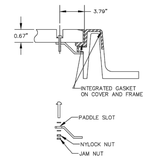

BOLT DOWN DETAIL

COMPOSITE WATERTIGHT MANHOLE COVER WITH CAM LOCKS AND GASKET

S106C

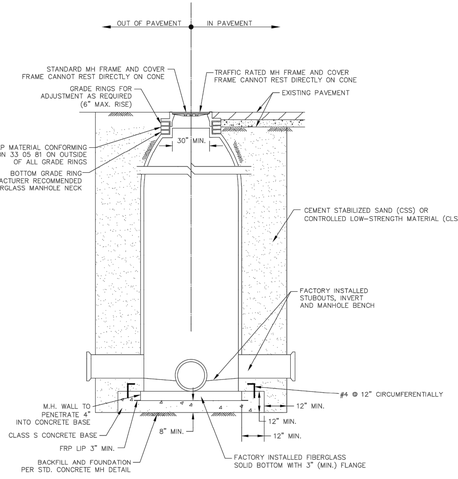

NOTES:

1. USE TRAFFIC RATED CASTINGS IN PAVED AREAS.
2. ALL NON-SHRINK GROUT TO BE CLASS D.
3. CONCRETE BENCH OR INVERT IS NOT ALLOWED.

FIBERGLASS MANHOLE WITH STUBOUTS

S107B

ENTERED BY	PROJECT #	
DESIGNED BY	DATE	REVISION
CHECKED BY		
PROJ. ENGR.		
PATH S:\Water Engineering\Engr\Design\Projects\Standard Details\wastewater details\Wastewater Detail Sheet 1-3.dwg		

CITY OF DENTON
ENGINEERING SERVICES

STANDARD DETAILS

WASTEWATER DETAILS

DATE
JAN. 2023

SHEET No.
4 OF 24

SCALE
HOR 1"= N.T.S.
VER 1"= N/A

CERTIFICATION:
THIS CITY OF DENTON STANDARD DETAIL SHEET IS AUTHORIZED FOR USE IN THIS PROJECT BY THE ENGINEER WHOSE SEAL APPEARS HEREON, AND WHO CERTIFIES THE CONTENT OF THE DETAILS AND NOTES HEREIN HAVE NOT BEEN ALTERED AND ASSUMES RESPONSIBILITY FOR APPROPRIATE USE OF THE STANDARDS WITHIN THIS SHEET.

PUBLIC WASTEWATER DETAILS C12.3

PLOTTED BY: IRIS HERNANDEZ DATE: 5/1/2023 11:38 AM PATH: P:\2007-00\2700 Land Development\703 Construction Documents\Design\Plot Sheets\PUBLIC DETAILS.dwg

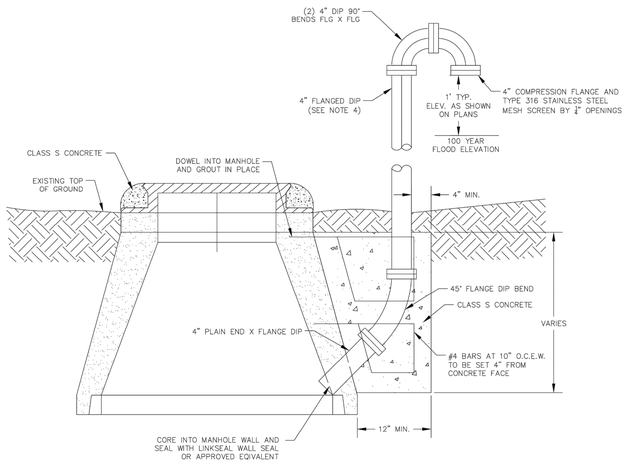

NOTES:
1. DUCTILE IRON PIPE AND FITTINGS SHALL HAVE 40 MIL POLYETHYLENE INTERIOR COATING.
2. ALL BOLTS AND NUTS TO BE TYPE 316 STAINLESS STEEL.
3. FINISH COATING
   A. WIRE BRUSH TO REMOVE ALL DIRT AND CONC. AND TO ROUGH UP FINISH.
   B. APPLY ONE PRIME COAT OF TNEMEC SERIES 37 CHEM PRIME (GRAY) TO 3 MILS DRY THICKNESS. GIVE SPECIAL ATTENTION AND SECOND COAT TO CORNERS AND BOLTS.
   C. APPLY ONE FINISH COAT OF TNEMEC SERIES 48-38 ALKYD ALUMINUM TO 2 MILS DRY THICKNESS.
4. VENT PIPES TALLER THAN 6' TO BE 6" DUCTILE IRON PIPE AND FITTINGS.
5. REFLECTIVE TAPE TO BE PLACED ON VENT 4.25 FEET ABOVE FINAL GRADE.

VENT MANHOLE

S108

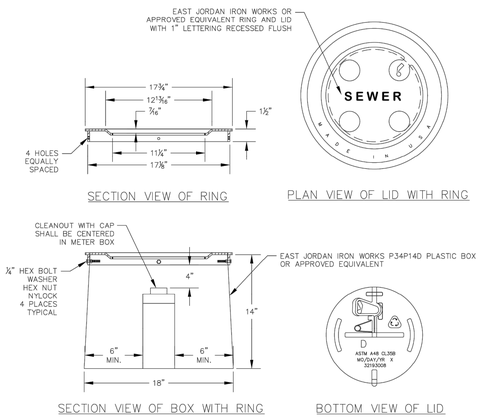

18" X 14" PLASTIC BOX WITH SEWER LID

S201

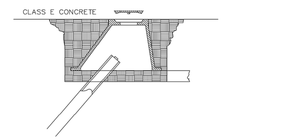

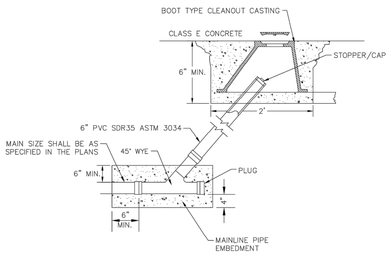

SANITARY SEWER MAINLINE CLEANOUT

S402

KEY:
1. WASTERWATER MAIN
2. WYE
3. WASTEWATER LATERAL (LENGTH VARIES)
4. WYE AND 45° BEND FOR RISER
5. STACK (LENGTH VARIES)
6. WASTEWATER LATERAL CLEANOUT CAP
7. WASTEWATER LATERAL (LENGTH VARIES)
8. END CAP AT EASEMENT LINE OR PROPERTY LINE
9. NATURAL FILL COMPACTED TO 95% STANDARD PROCTOR DENSITY
10. 18" X 14" PLASTIC BOX WITH SEWER LID

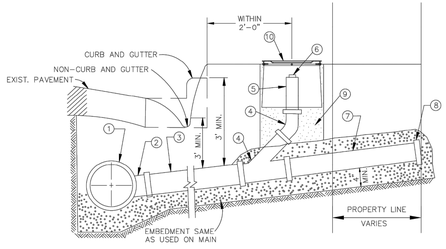

NOTES:
1. SERVICE TO BE INSTALLED IN ACCORDANCE WITH CITY OF DENTON SPEC. SECTION 33 31 16.
2. SIZE OF SERVICE LINE PIPING AND FITTINGS PER PLANS OR CITY OF DENTON WATER & WASTEWATER CRITERIA MANUAL.
3. SLOPE OF LATERAL TO BE 2% MINIMUM UNLESS INSTRUCTED OTHERWISE BY CITY.
4. VERTICAL BENDS (22.5° MAX.) MAY BE USED TO CLEAR UNDERGROUND CONFLICTS
5. THE MAINLINE LATERAL CONNECTION TO AN EXISTING PRIVATE BUILDING LATERAL SHALL BE AS CLOSE TO THE PROPERTY LINE AS POSSIBLE.
6. INSTALL STOPPER OR CAP AT PROPERTY OR EASEMENT LINE IF BUILDING LATERAL DOES NOT EXIST.
7. THE CLEANOUT MAY NOT BE PLACED IN VEHICLE TRAFFIC AREAS, OR SIDEWALK WITHOUT APPROVAL BY THE WASTEWATER DEPARTMENT.
8. FOR PAVED AREAS, A CAST IRON STACK AND CLEANOUT SHALL BE USED IN PLACE OF PVC PIPE, FITTINGS AND PLASTIC BOX. THE CAST IRON STACK AND CLEANOUT SHALL EXTEND THROUGH THE ENTIRE DEPTH OF THE PAVEMENT AND CONFORM TO ASTM A48 CLASS 35B STANDARDS.
9. THE CLEANOUT SHALL BE CENTERED IN PLASTIC BOX.
10. CENTER OF CLEANOUT TO BE LOCATED NO FURTHER THAN 2'-0" BEHIND BACK OF CURB. FOR UNCURBED STREETS, CLEANOUT TO BE LOCATED OUTSIDE OF THE DRAINAGE DITCH.
11. PLUMBERS NOT ALLOWED TO CONNECT TO STACK, ONLY TO THE BOTTOM OF WYE.
12. AN "S" SHALL BE ETCHED INTO THE CURB WHERE THE SERVICE LINE CROSSES THE CURB & GUTTER AND PAINTED GREEN.

SANITARY SEWER SERVICE WITH SINGLE CLEANOUT

S403

KEY:
1. WASTERWATER MAIN
2. WYE
3. WASTEWATER LATERAL (LENGTH VARIES)
4. WYE AND 45° BEND FOR RISER
5. STACK (LENGTH VARIES)
6. WASTEWATER LATERAL CLEANOUT CAP
7. WASTEWATER LATERAL (LENGTH VARIES)
8. END CAP AT EASEMENT LINE OR PROPERTY LINE
9. NATURAL FILL COMPACTED TO 95% STANDARD PROCTOR DENSITY
10. 18" X 14" PLASTIC BOX WITH SEWER LID

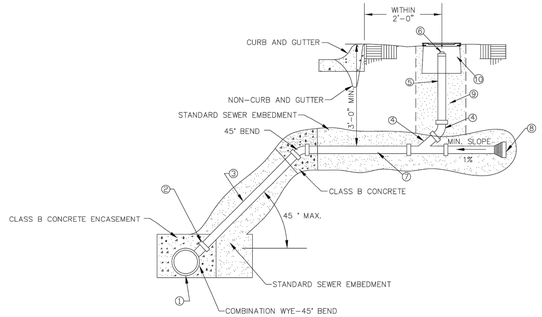

NOTES:
1. SERVICE TO BE INSTALLED IN ACCORDANCE WITH CITY OF DENTON SPEC. SECTION 33 31 16.
2. SIZE OF SERVICE LINE PIPING AND FITTINGS PER PLANS OR CITY OF DENTON WATER & WASTEWATER CRITERIA MANUAL.
3. SLOPE OF LATERAL TO BE 2% MINIMUM UNLESS INSTRUCTED OTHERWISE BY CITY.
4. VERTICAL BENDS (22.5° MAX.) MAY BE USED TO CLEAR UNDERGROUND CONFLICTS
5. THE MAINLINE LATERAL CONNECTION TO AN EXISTING PRIVATE BUILDING LATERAL SHALL BE AS CLOSE TO THE PROPERTY LINE AS POSSIBLE.
6. INSTALL STOPPER OR CAP AT PROPERTY OR EASEMENT LINE IF BUILDING LATERAL DOES NOT EXIST.
7. THE CLEANOUT MAY NOT BE PLACED IN VEHICLE TRAFFIC AREAS, OR SIDEWALK WITHOUT APPROVAL BY THE WASTEWATER DEPARTMENT.
8. FOR PAVED AREAS, A CAST IRON STACK AND CLEANOUT SHALL BE USED IN PLACE OF PVC PIPE, FITTINGS AND PLASTIC BOX. THE CAST IRON STACK AND CLEANOUT SHALL EXTEND THROUGH THE ENTIRE DEPTH OF THE PAVEMENT AND CONFORM TO ASTM A48 CLASS 35B STANDARDS.
9. CONNECTION FITTING TO MAIN TO BE ENCASED IN CLASS B CONCRETE.
10. THE CLEANOUT SHALL BE CENTERED IN PLASTIC BOX.
11. CENTER OF CLEANOUT TO BE LOCATED NO FURTHER THAN 2'-0" BEHIND BACK OF CURB. FOR UNCURBED STREETS, CLEANOUT TO BE LOCATED OUTSIDE OF THE DRAINAGE DITCH.
12. PLUMBERS NOT ALLOWED TO CONNECT TO STACK, ONLY TO THE BOTTOM OF WYE.
13. AN "S" SHALL BE ETCHED INTO THE CURB WHERE THE SERVICE LINE CROSSES THE CURB & GUTTER AND PAINTED GREEN.

SANITARY SEWER SERVICE WITH SINGLE CLEANOUT 12' DEEP OR GREATER

S404

NOTES:
1. THIS DETAIL IS ONLY FOR USE WHEN NEW MAIN WILL NOT MATE WITH EXISTING STUBOUT JOINT DUE TO DIFFERENT DIMENSIONS OR MATERIALS.
2. DETAIL ONLY APPLICABLE FOR PIPE SIZES 12" OR LESS.
3. FOR THE FOLLOWING CONNECTION TYPES:

EXISTING	NEW
CLAY	PVC
CONCRETE	PVC
DUCTILE IRON	PVC

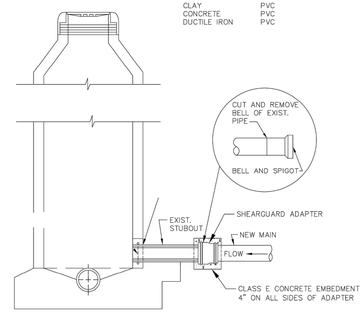

SANITARY SEWER MAIN TIE-IN WITH STUBOUT OF DISSIMILAR SIZE OR TYPE

S405

ENTERED BY	PROJECT #	
DESIGNED BY	DATE	REVISION
CHECKED BY		
PROJ. ENGR.		
PATH S:\Water Engineering\Engr\Design\Projects\Standard Details\wastewater details\Wastewater Detail Sheet 1-3.dwg		

CITY OF DENTON
ENGINEERING SERVICES

STANDARD DETAILS
WASTEWATER DETAILS

DATE
JAN. 2023

SHEET No.
5 OF 24

SCALE
HOR 1"= N.T.S.
VER 1"= N/A

CERTIFICATION:
THIS CITY OF DENTON STANDARD DETAIL SHEET IS AUTHORIZED FOR USE IN THIS PROJECT BY THE ENGINEER WHOSE SEAL APPEARS HEREON, AND WHO CERTIFIES THE CONTENT OF THE DETAILS AND NOTES HEREIN HAVE NOT BEEN ALTERED AND ASSUMES RESPONSIBILITY FOR APPROPRIATE USE OF THE STANDARDS WITHIN THIS SHEET.

PLOTTED BY: IBIS HERNANDEZ DATE: 3/16/2023 11:38 AM PATH: P:\2017-00-00700 Land Development\PID Construction Documents\Design\Plot Sheets\PUBLIC DETAILS.dwg

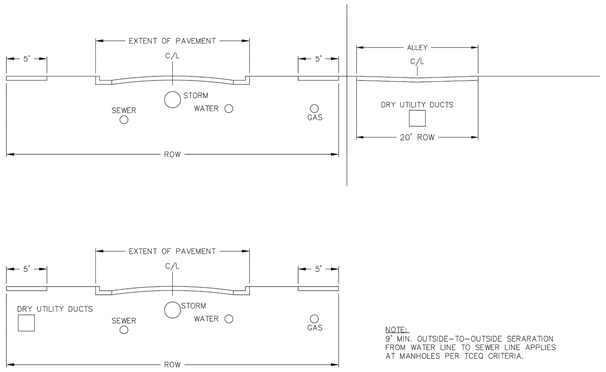

NOTE:
9' MIN. OUTSIDE-TO-OUTSIDE SERARATION FROM WATER LINE TO SEWER LINE APPLIES AT MANHOLES PER TCEQ CRITERIA.

TYPICAL UTILITY PLACEMENTS

U101

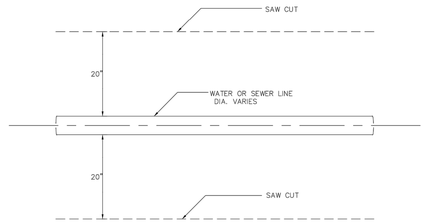

TYPICAL SAW-CUT

U102

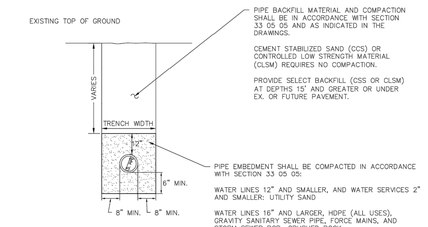

PROPOSED PAVEMENT TRENCH

U201

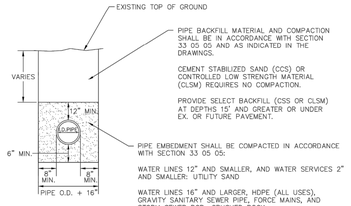

UNPAVED TRENCH

U202

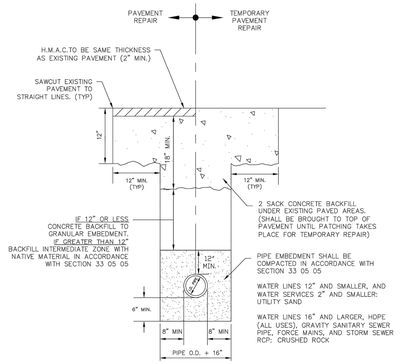

EXISTING PAVEMENT TRENCH AND REPAIR ASPHALT

U203A

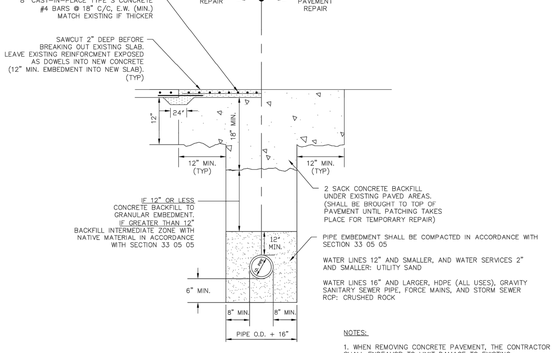

NOTES:

1. WHEN REMOVING CONCRETE PAVEMENT, THE CONTRACTOR SHALL ENDEAVOR TO LIMIT DAMAGE TO EXISTING REINFORCEMENT SO IT MAY BE EMPLOYED IN THE REPLACEMENT OPERATION. IF ORIGINAL REINFORCEMENT IS CUT OR BROKEN, REPLACEMENT BARS OF THE SAME SIZE SHALL BE INSTALLED BY DRILLING AND DOWELING.
2. IF DRILLING AND DOWELING IS REQUIRED, DOWELED BARS SHALL BE DRILLED INTO PAVEMENT HORIZONTALLY BY USE OF A MECHANICAL RIG. DRILLING BY HAND IS NOT ALLOWED. DRILLED HOLES SHALL BE BLOWN CLEAN AND DOWELS COATED WITH EPOXY RESIN. MINIMUM EMBEDMENT IS TO BE 12 INCHES.
3. USE SAND TO SMOOTH AND LEVEL SUBGRADE PRIOR TO CONCRETE POUR.
4. ALL CONCRETE REPAIRS MUST BE FULL PANELS.

EXISTING PAVEMENT TRENCH AND REPAIR CONCRETE

U203C

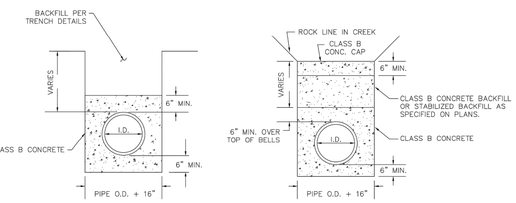

TYPICAL INSTALLATION

INSTALLATION IN DITCHES AND CREEKS

CONCRETE ENCASEMENT FOR UTILITY LINES

U204

ENTERED BY	PROJECT #	
DESIGNED BY	DATE	REVISION
CHECKED BY		
PROJ. ENGR.		
PATH S:\Water Engineering\Engr\Design\Projects\Standard Details\water-wastewater shared drawings\Water-Wastewater Sht1-2.dwg		

CITY OF DENTON
ENGINEERING SERVICES

STANDARD DETAILS

WATER/WASTEWATER SHARED DETAILS

DATE
JAN. 2023

SHEET No.
7 OF 24

SCALE
HOR 1"= N.T.S.
VER 1"= N/A

CERTIFICATION:
THIS CITY OF DENTON STANDARD DETAIL SHEET IS AUTHORIZED FOR USE IN THIS PROJECT BY THE ENGINEER WHOSE SEAL APPEARS HEREON, AND WHO CERTIFIES THE CONTENT OF THE DETAILS AND NOTES HEREIN HAVE NOT BEEN ALTERED AND ASSUMES RESPONSIBILITY FOR APPROPRIATE USE OF THE STANDARDS WITHIN THIS SHEET.

PLOTTED BY: IBIS HERNANDEZ DATE: 3/1/2023 11:18 AM PATH: P:\3997-06-02700 Land Development\03 Construction Documents\Design\Plot Sheets\PUBLIC DETAILS.dwg

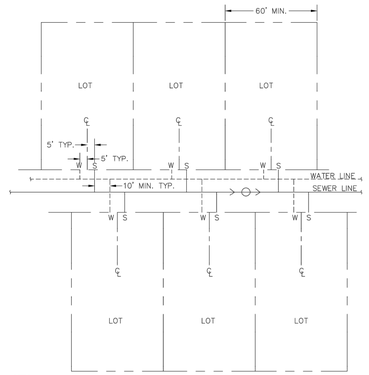

NOTES:

1. WATER METERS PLACED IN UNPAVED PUBLIC R.O.W. OR UTILITY EASEMENT.

2. IF WIDTH OF LOT IS LESS THAN 60' WIDE, USE DETAIL U206B.

TYPICAL SERVICE LINE LAYOUT

U206A

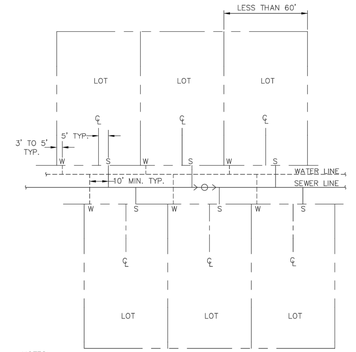

NOTES:

1. WATER METERS PLACED IN UNPAVED PUBLIC R.O.W. OR UTILITY EASEMENT.

2. IF WIDTH OF LOT IS 60' OR GREATER, USE DETAIL U206A.

ALTERNATE SERVICE LINE LAYOUT
*(FOR LOTS LESS THAN 60' WIDE)

U206B

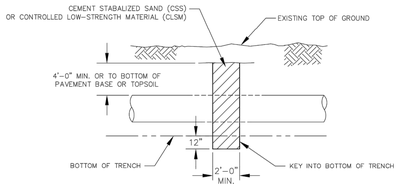

NOTES:

1. TRENCH DAM SHALL SPAN THE FULL WIDTH OF THE TRENCH.

2. CLSM PER SECTION 03 34 13.

3. SEE PLAN AND PROFILE SHEETS FOR LOCATION OF TRENCH DAMS.

TRENCH DAM

U207

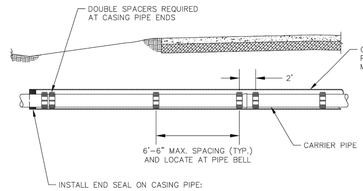

FOR WATER LINES AND FORCE MAINS LESS THAN 24"–
SECTION 2.2.A.6.a.1 OF 33 05 15

FOR WATER LINES AND FORCE MAINS 24" AND LARGER–
SECTION 2.2.A.6.a.2 OF 33 05 15

FOR GRAVITY SANITARY SEWER–
SECTION 2.2.A.6.a.3 OF 33 05 15

NOTES:

1. BORE AND CASING SHALL BE INSTALLED AS SHOWN IN PROFILE VIEW OF PLANS WHERE APPLICABLE. THIS DETAIL ILLUSTRATES THE GENERAL LOCATION OF CASING SPACERS FOR SUPPORTING CARRIER PIPE AND GROUTING ENDS OF CASING PIPE.

2. FOR PRESSURIZED PIPE, ALL INTERIOR JOINTS SHALL BE RESTRAINED PER SECTION 33 05 15. NO RESTRAINT IS REQUIRED FOR NON–PRESSURIZED PIPE.

3. CASING SPACERS SHALL CONFORM TO REQUIREMENTS OF SECTION 33 05 15.

4. CARRIER PIPE INSTALLATION PER SECTION 33 05 15.

5. ANNULAR GROUTING, IF REQUIRED, SHALL BE ACCORDING TO SECTION 33 05 15.

INSTALLATION IN STEEL CASING OR LINER PLATE FOR PVC AND DIP

U208A

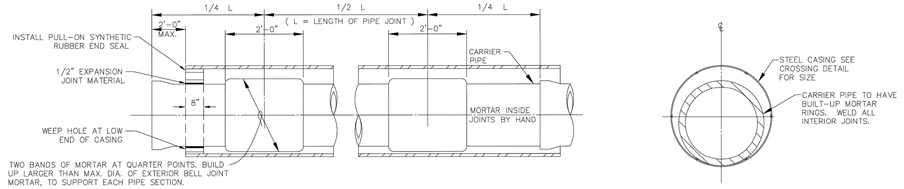

SIDE VIEW

END VIEW

INSTALLATION IN STEEL CASING FOR CONCRETE PRESSURE PIPE BAR–WRAPPED STEEL CYLINDER TYPE

U208B

ENTERED BY	PROJECT #	
DESIGNED BY	DATE	REVISION
CHECKED BY		
PROJ. ENGR.		
PATH S:\Water Engineering\Engr\Design\Projects\Standard Details\water–wastewater shared drawings\Water–Wastewater Sht1–2.dwg		

CITY OF DENTON
ENGINEERING SERVICES

STANDARD DETAILS
WATER/WASTEWATER SHARED DETAILS

DATE
JAN. 2023

SHEET No.
8 OF 24

SCALE
HOR 1"= N.T.S.
VER 1"= N/A

CERTIFICATION:
THIS CITY OF DENTON STANDARD DETAIL SHEET IS AUTHORIZED FOR USE IN THIS PROJECT BY THE ENGINEER WHOSE SEAL APPEARS HEREON, AND WHO CERTIFIES THE CONTENT OF THE DETAILS AND NOTES HEREIN HAVE NOT BEEN ALTERED AND ASSUMES RESPONSIBILITY FOR APPROPRIATE USE OF THE STANDARDS WITHIN THIS SHEET.

PLOTTED BY: IBIS HERNANDEZ DATE: 3/1/2023 11:58 AM PATH: P:\3391-05-02700 Land Development\03 Construction Documents\Design\Plot Sheets\PUBLIC DETAILS.dwg

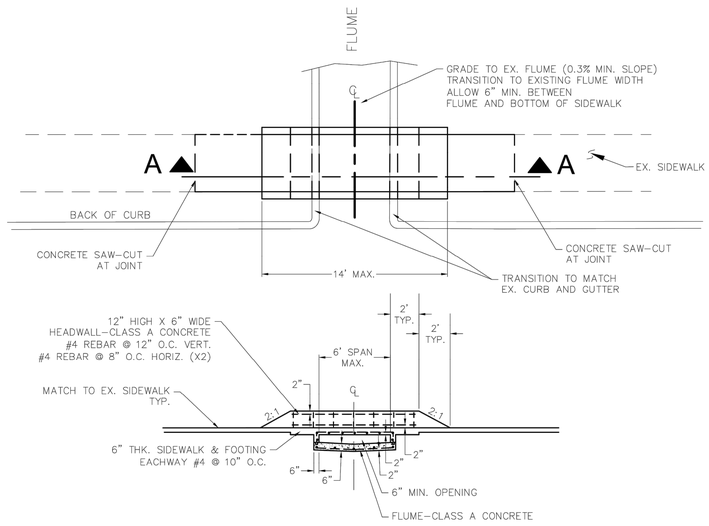

A-A

SIDEWALK SPANNING FLUME

D101

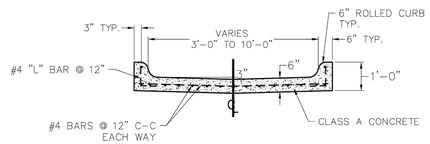

NOTES:

1. MINIMUM FLUME GRADE SHALL BE 0.5%.
2. EXPANSION JOINTS SHALL BE INSTALLED EVERY 200 FT. AND AT PCs, PTs, AND MAJOR CHANGES IN GEOMETRY. USE DETAIL T208.

FLUME

D102

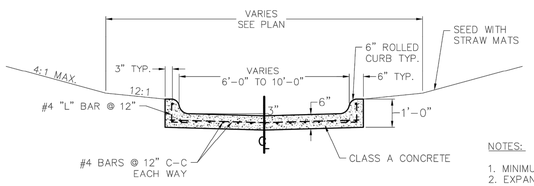

NOTES:

1. MINIMUM FLUME GRADE SHALL BE 0.5%.
2. EXPANSION JOINTS SHALL BE INSTALLED EVERY 200 FT. AND AT PCs, PTs, AND MAJOR CHANGES IN GEOMETRY. USE DETAIL T208.
3. UNPAVED CHANNEL SIDES AND BOTTOM SHALL BE SEEDED WITH THE PLACEMENT OF STRAW MATS. NO SYNTHETIC MATERIAL ALLOWED IN THE MATS.

CONCRETE PILOT CHANNEL

D105

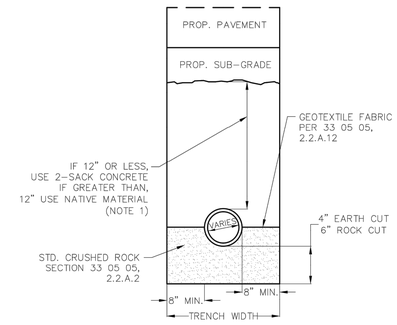

PROPOSED PAVEMENT
STORM DRAIN BACKFILL

D201

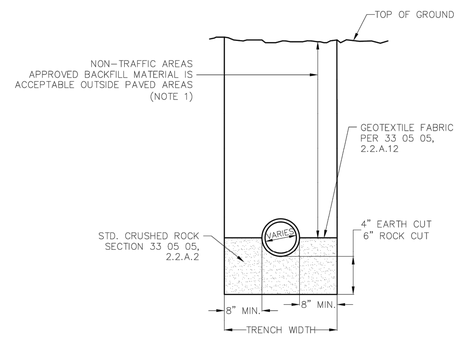

UNPAVED
STORM DRAIN BACKFILL

D202

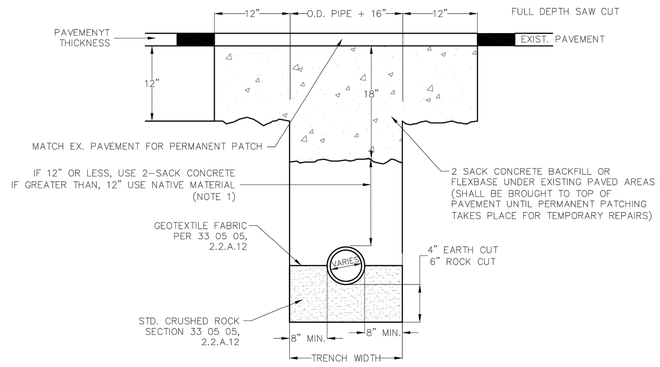

EXISTING PAVEMENT
STORM DRAIN BACKFILL

D203

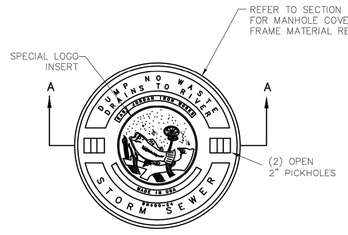

TOP VIEW

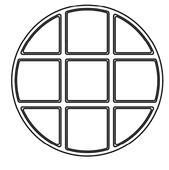

BOTTOM VIEW

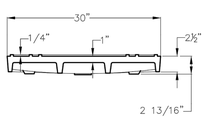

SECTION A-A

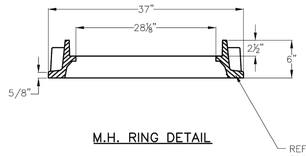

M.H. RING DETAIL



STACK DETAIL

JUNCTION BOX, MANHOLE AND INLET COVER

D106

GENERAL NOTES:

1. COMPACT BACKFILL MATERIAL IN ACCORDANCE WITH SECTION 33 05 05.

2. HEAVY DUTY MANHOLE COVERS ON JUNCTION BOXES AND MANHOLES ARE REQUIRED IN ALL VEHICLE TRAFFIC AREAS.

3. PIPES SHALL BE RCP CLASS III WITH 2' OR GREATER COVER, RCP CLASS IV WITH 1' TO 2' COVER AND RCP CLASS V WITH LESS THAN 1' COVER. SEE TABLE 1 SECTION 33 42 11.

ENTERED BY	PROJECT #	
DESIGNED BY	DATE	REVISION
CHECKED BY		
PROJ. ENGR.		
PATH S:\Water Engineering\Engr\Design\Projects\Standard Details\Storm Sewer details\SHEET1.dwg		

CITY OF DENTON
ENGINEERING SERVICES

STANDARD DETAILS

STORM DRAINAGE DETAILS

DATE
JAN. 2023

SHEET No.
9 OF 24

SCALE
HOR 1"= N.T.S.
VER 1"= N.T.S.

CERTIFICATION:
THIS CITY OF DENTON STANDARD DETAIL SHEET IS AUTHORIZED FOR USE IN THIS PROJECT BY THE ENGINEER WHOSE SEAL APPEARS HEREON, AND WHO CERTIFIES THE CONTENT OF THE DETAILS AND NOTES HEREIN HAVE NOT BEEN ALTERED AND ASSUMES RESPONSIBILITY FOR APPROPRIATE USE OF THE STANDARDS WITHIN THIS SHEET.

PLOTTED BY: ISIS HERNANDEZ DATE: 5/1/2023 11:38 AM PATH: P:\3307-00\207000 Land Development\703 Construction Documents\Design\Plot Sheets\PUBLIC DETAILS.dwg

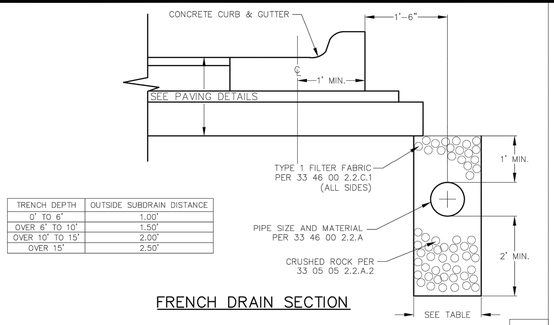

TRENCH DEPTH	OUTSIDE SUBDRAIN DISTANCE
0' TO 6'	1.00'
OVER 6' TO 10'	1.50'
OVER 10' TO 15'	2.00'
OVER 15'	2.50'

FRENCH DRAIN SECTION

D104

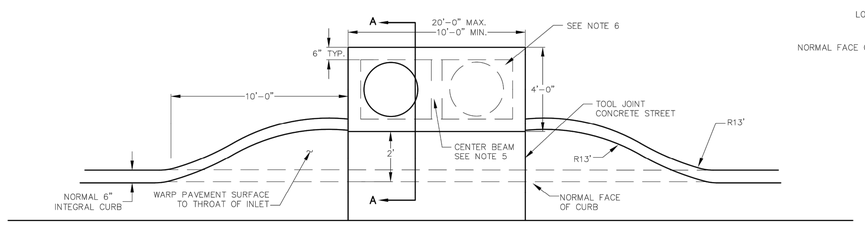

RECESSED INLET DETAIL (PLAN)

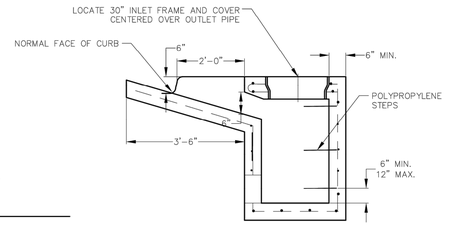

SECTION A–A

D301

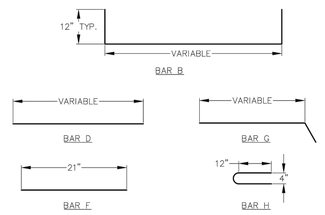

BAR DETAIL

D305

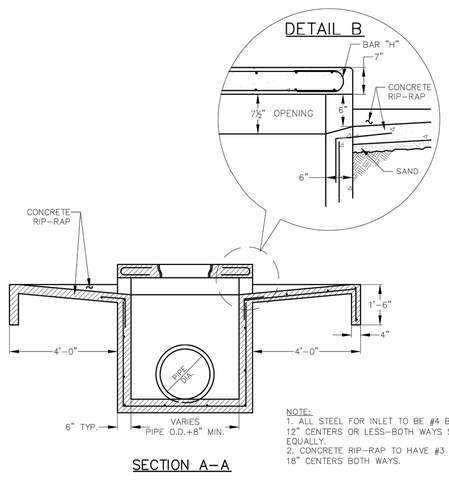

NOTE:
1. ALL STEEL FOR INLET TO BE #4 BARS ON 12" CENTERS OR LESS–BOTH WAYS SPACED EQUALLY.
2. CONCRETE RIP–RAP TO HAVE #3 BARS ON 18" CENTERS BOTH WAYS.

SECTION A–A

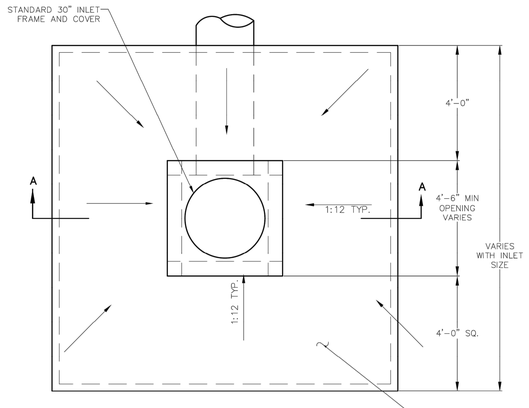

YARD INLET DETAIL (PLAN)

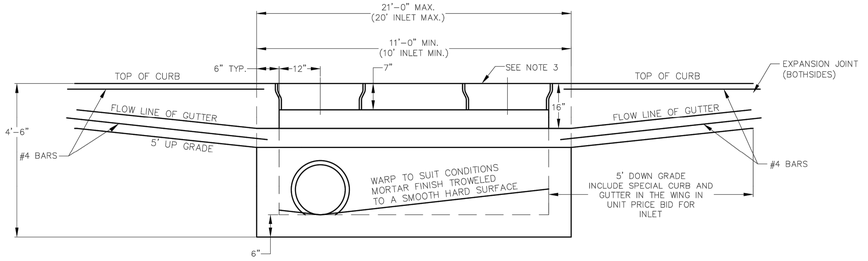

PROFILE

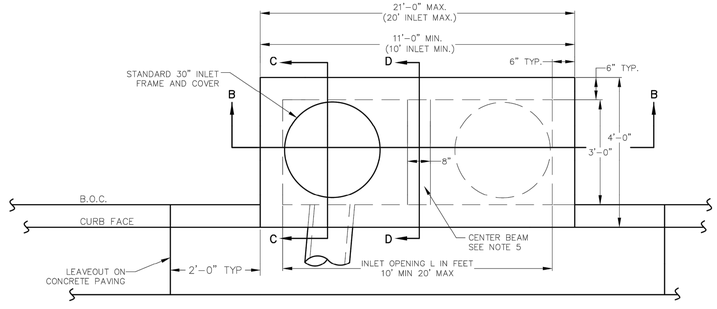

STANDARD CURB INLET (PLAN)

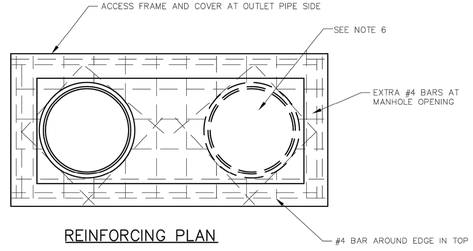

REINFORCING PLAN

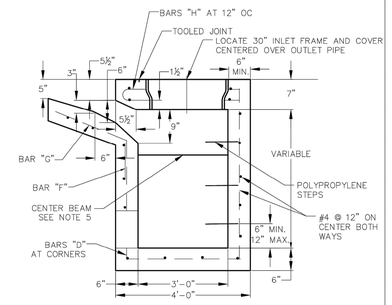

SECTION C–C

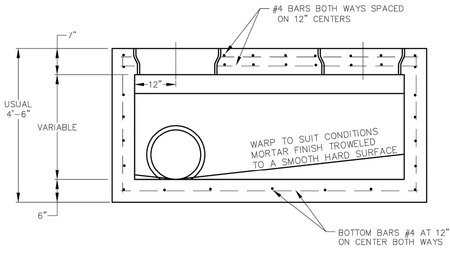

SECTION B–B

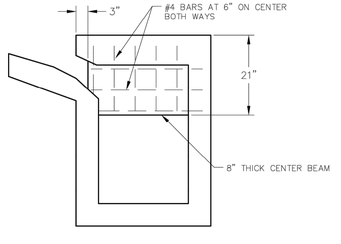

SECTION D–D

D302

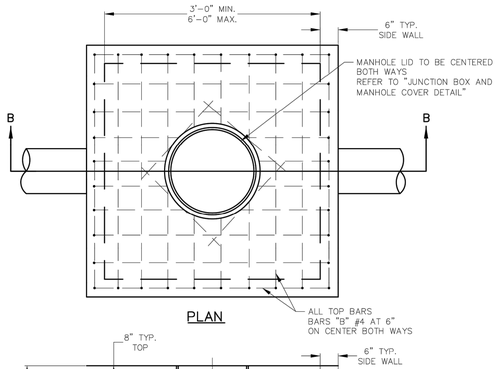

PLAN

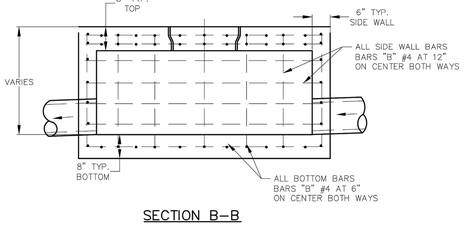

SECTION B–B

JUNCTION BOX DETAIL

D304

GENERAL NOTES:

1. ALL STEEL REINFORCING BARS TO BE BAR D GRADE 60 #4 STEEL BARS ON 12" CENTER WHERE NOT SPECIFIED ON THE DETAIL.
2. ALL EXPOSED EDGES TO BE CHAMFERED ¾".
3. TOOLED JOINT 6" FROM FACE OF INLET OPENING.
4. PROVIDE MINIMUM 2" CONCRETE COVER MEASURED FROM CENTER OF REINFORCEMENT.
5. ALL INLETS SHALL HAVE A CENTER BEAM POSITIONED AT THE MIDPOINT OF THE INLET.
6. INLETS OVER 10 FEET OPENING IN LENGTH SHALL HAVE TWO ACCESS COVERS.
7. ALL INLETS SHALL HAVE AT LEAST ONE FRAME AND COVER CENTERED OVER OUTLET PIPE.
8. ALL CAST IN PLACE CONCRETE SHALL BE CLASS S TABLE 2 03 00 00 AND ALL PRE–CAST CONCRETE SHALL BE CLASS H PER 33 42 33, 2.2.B
9. POLYPROPYLENE STEPS SHALL BE 12" WIDE AND 12" MAX. BETWEEN STEPS
PER 33 42 33, 2.2.E.1 AND 3.4.D.
CAST–IN–PLACE: CAST STEPS INTO INLET WALLS
PRECAST: DRILL AND EPOXY OR GROUT STEPS INTO PLACE IN ACCORDANCE WITH MANUFACTURE'S RECOMMENDATIONS

ENTERED BY	PROJECT #	
DESIGNED BY	DATE	REVISION
CHECKED BY		
PROJ. ENGR.		
PATH S:\Water Engineering\Engr\Design\Projects\Standard Details\Storm Sewer details\SHEET2.dwg		

CITY OF DENTON
ENGINEERING SERVICES

STANDARD DETAILS

STORM DRAINAGE DETAILS

DATE
JAN. 2023

SHEET No.
10 OF 24

SCALE
HOR 1"= N.T.S.
VER 1"= N/A

CERTIFICATION:
THIS CITY OF DENTON STANDARD DETAIL SHEET IS AUTHORIZED FOR USE IN THIS PROJECT BY THE ENGINEER WHOSE SEAL APPEARS HEREON, AND WHO CERTIFIES THE CONTENT OF THE DETAILS AND NOTES HEREIN HAVE NOT BEEN ALTERED AND ASSUMES RESPONSIBILITY FOR APPROPRIATE USE OF THE STANDARDS WITHIN THIS SHEET.

PUBLIC STORM DRAINAGE DETAILS C12.8

PLOTTED BY: IRIS HERNANDEZ DATE: 2/16/2023 11:38 AM PATH: P:\SDP-20-0270\Land Development\703 Construction Documents\Design\Plot Sheets\PUBLIC DETAILS.dwg

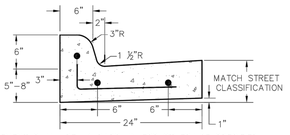

NOTES:
1. REINFORCEMENT SHALL BE #4 BARS UNLESS OTHERWISE SPECIFIED
2. USE MINIMUM CLASS P1 CONCRETE
3. TRANSVERSE BARS ON 24" CENTERS

STANDARD CURB AND GUTTER SECTION
WITH ASPHALT PAVING

T201A

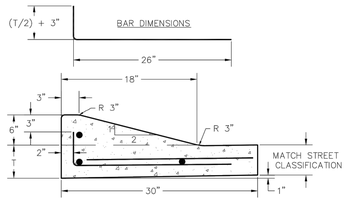

NOTES:
1. REINFORCEMENT SHALL BE #4 BARS UNLESS OTHERWISE SPECIFIED
2. USE MINIMUM CLASS P1 CONCRETE
3. TRANSVERSE BARS ON 24" CENTERS

SURMOUNTABLE CURB AND GUTTER SECTION
WITH ASPHALT PAVING

T204A

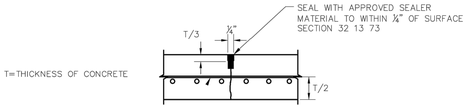

NOTE:
1. FOR PAVEMENT OUTSIDE AN INTERSECTION'S PCs
(a) TRANVERSE/LATERAL SAWED JOINT SHALL BE PLACED EVERY 20' EXCEPT AT EXPANSION JOINT OR CONSTRUCTION JOINT
(b) LONGITUDINAL SAWED JOINT SHALL BE PLACED AT CENTER OF PAVEMENT WHEN THERE IS NO CONSTRUCTION JOINT
2. FOR PAVEMENT INSIDE AN INTERSECTION'S PCs, BOTH TRANSVERSE/LATERAL AS WELL AS LONGITUDINAL SAW JOINTS SHALL BE PLACED EVERY 20' OR AT AN AVERAGE AS CLOSE TO 20' AS REASONABLY POSSIBLE
3. SAW JOINT IS TO BE CONTINUOUS THROUGH CURB, WHERE APPLICABLE

SAWED JOINT
FOR CONCRETE PAVEMENT

T207

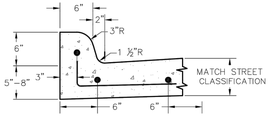

NOTES:
1. REINFORCEMENT SHALL BE #4 BARS UNLESS OTHERWISE SPECIFIED
2. USE MINIMUM CLASS P1 CONCRETE
3. TRANSVERSE BARS ON 24" CENTERS

STANDARD MONOLITHIC CURB AND GUTTER SECTION
WITH CONCRETE PAVING

T201C

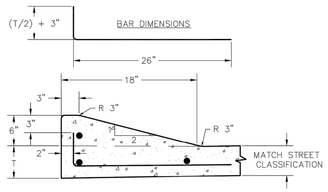

NOTES:
1. REINFORCEMENT SHALL BE #4 BARS UNLESS OTHERWISE SPECIFIED
2. USE MINIMUM CLASS P1 CONCRETE
3. TRANSVERSE BARS ON 24" CENTERS

SURMOUNTABLE MONOLITHIC CURB AND GUTTER SECTION
WITH CONCRETE PAVING

T204C

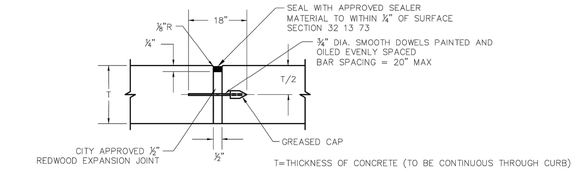

NOTES:
1. TO BE PLACED AT THE PC'S OF AN INTERSECTION AND THEN EVERY 200' MAXIMUM THEREAFTER AWAY FROM THE INTERSECTION (EXCEPT AS NOTED)
2. IF THE LAST PROPOSED EXPANSION JOINT PRIOR TO THE NEXT INTERSECTION'S PC'S EXPANSION JOINT IS LESS THAN 50', THEN NO EXPANSION JOINT (THE LAST PANEL WILL BE GREATER THAN 200' BUT LESS THAN 250')
3. IF THE LAST PROPOSED EXPANSION JOINT PRIOR TO THE NEXT INTERSECTION'S PC'S EXPANSION JOINT IS 50' OR GREATER BUT LESS THAN 200', THEN PLACE THE LAST EXPANSION JOINT SUCH THAT EACH CONCRETE PANEL (ON EACH SIDE OF SAID EXPANSION JOINT) ARE EQUAL TO EACH OTHER (AND EACH IS LESS THAN 200')

EXPANSION JOINT
FOR CONCRETE PAVEMENT

T208

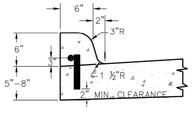

NOTES:
1. REINFORCEMENT SHALL BE #4 BARS UNLESS OTHERWISE SPECIFIED
2. VERTICAL DOWEL BARS SHALL BE 6" LONG ON 24" CENTERS
3. USE MINIMUM CLASS P1 CONCRETE
4. WHEN ATTACHING NEW CURB TO EXISTING CONCRETE, DRILL ¾" DIA. HOLES INTO EXISITNG CONCRETE. BLOW HOLES CLEAN AND SECURE REBAR OF CORRECT SIZE AS REQUIRED FOR PAVEMENT WITH EPOXY GROUT

CONCRETE PAVEMENT ALTERNATE CURB DOWELED CURB SECTION
(UPON APPROVAL BY CITY ENGINEER)

T202

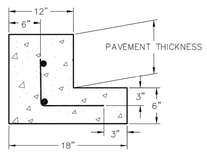

NOTES:
1. USE MINIMUM CLASS P1 CONCRETE
2. PAVEMENT THICKNESS SHALL BE IN ACCORDANCE WITH TABLE ON "ASPHALT CONCRETE PAVING" STANDARD DETAIL SHEET PER STREET TYPE
3. REINFORCEMENT SHALL BE #4 BARS UNLESS OTHERWISE SPECIFIED
4. TRANSVERSE BARS ON 24" CENTERS

PORTLAND CEMENT CONCRETE EDGE RESTRAINT
FOR RURAL/SUBURBAN ASPHALT STREET

T205

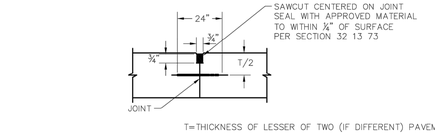

NOTES:
1. FOR NEW ASPHALTIC CONCRETE PAVEMENT TO EXISTING ASPHALTIC CONCRETE PAVEMENT, REBAR IS NOT REQUIRED.
2. FOR NEW PORTLAND CEMENT CONCRETE TO EXISTING PORTLAND CEMENT CONCRETE, REBAR IS REQUIRED.
3. IF REBAR IS REQUIRED AS NOTED ABOVE:
(a) DRILL, DOWEL AND EPOXY #3 REBAR INTO EXISTING PAVEMENT
(b) #3 REBAR TO EXTEND A MINIMUM OF 12" INTO BOTH PAVEMENTS
(c) #3 REBAR TO BE A MAXIMUM OF 18" ON CENTER

CONSTRUCTION JOINT

T209

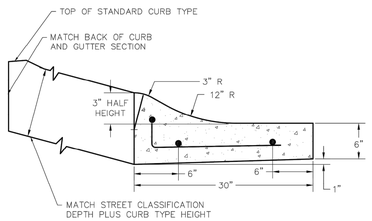

NOTES:
1. REINFORCEMENT SHALL BE #4 BARS UNLESS OTHERWISE SPECIFIED
2. USE MINIMUM CLASS P1 CONCRETE
3. TRANSVERSE BARS ON 24" CENTERS

SURMOUNTABLE TRAFFIC CALMING CURB AND GUTTER
WITH TRANSITION TO FULL HEIGHT CURB

T203

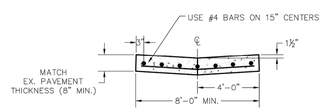

NOTES:
1. REFER TO CONC. PAVEMENT DETAIL SHT. FOR JOINT DETAILS
2. CONCRETE SHALL BE MACHINE PLACED–CLASS P1 OR HAND PLACED–CLASS P2
3. #4 TRANSVERSE BARS ON 18" CENTERS

VALLEY GUTTER

T206

GENERAL NOTES:

1. PAVEMENT DEPTH(S) INDICATED ARE MINIMUM AND MAY BE INCREASED UPON RECOMMENDATION OF ENGINEER OF RECORD. PAVEMENT DEPTH SHALL BE CONSISTENT FOR ALL APPLICABLE DETAILS.

2. REBAR INDICATED ARE MINIMUM AND MAY BE INCREASED UPON RECOMMENDATION OF ENGINEER OF RECORD. REBAR SIZE SHALL BE CONSISTENT FOR ALL APPLICABLE DETAILS.

ENTERED BY	PROJECT #	
DESIGNED BY	DATE	REVISION
CHECKED BY		
PROJ. ENGR.		
PATH	S:\Water Engineering\Engr\Design\Projects\Standard Details\Asphalt-Concrete Shared\ASPHALT-CONCRETE-DETAILS.dwg	

CITY OF DENTON
ENGINEERING SERVICES

STANDARD DETAILS
CURB & GUTTER AND JOINT DETAILS

DATE
JAN. 2023

SHEET No.
16 OF 24

SCALE
HOR 1"= N.T.S.
VER 1"= N.T.S.

CERTIFICATION:
THIS CITY OF DENTON STANDARD DETAIL SHEET IS AUTHORIZED FOR USE IN THIS PROJECT BY THE ENGINEER WHOSE SEAL APPEARS HEREON, AND WHO CERTIFIES THE CONTENT OF THE DETAILS AND NOTES HEREIN HAVE NOT BEEN ALTERED AND ASSUMES RESPONSIBILITY FOR APPROPRIATE USE OF THE STANDARDS WITHIN THIS SHEET.

PLOTTED BY: IBIS HERNANDEZ DATE: 3/1/2023 11:18 AM PATH: P:\399\26\26700 Land Development\703 Construction Documents\Design\Plot Sheets\PUBLIC DETAILS.dwg

WITH CURB & GUTTER

NO CURB & GUTTER
(RURAL RD. OR ALLEY)

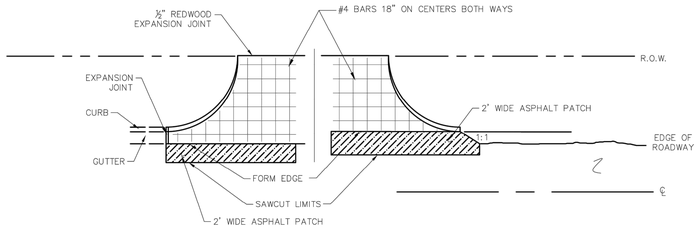

STANDARD DRIVE APPROACH–REINFORCEMENT PLAN
EXISTING ASPHALT STREET

T306A

WITH CURB & GUTTER

NO CURB & GUTTER
(RURAL RD. OR ALLEY)

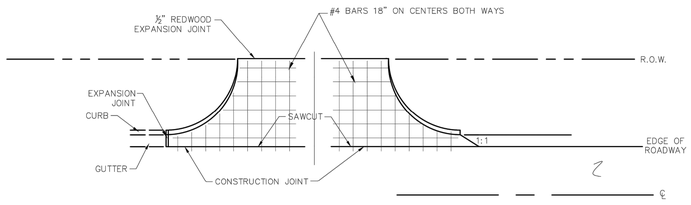

STANDARD DRIVE APPROACH–REINFORCEMENT PLAN
EXISTING CONCRETE STREET

T306C

STANDARD DRIVE APPROACH–DIMENSION TABLE

DRIVE APPROACH			
USE	WIDTH	RADIUS	MIN. THICKNESS*
SINGLE FAMILY & DUPLEX RESIDENTIAL	MIN. WIDTH = 12 FEET MAX. WIDTH = 20 FEET	5 FEET	6 INCHES
MULTI–FAMILY RESIDENTIAL	MIN. WIDTH = 24 FEET MAX. WIDTH = 38 FEET	10 TO 20 FEET	8 INCHES
COMMERCIAL & INDUSTRIAL	MIN. WIDTH = 30 FEET MAX. WIDTH = 38 FEET	20 TO 25 FEET	8 INCHES

1. THICKNESS AND REINFORCEMENT TO BE DESIGNED BY ENGINEER OF RECORD. MATERIAL TO BE CLASS P2 REINFORCED CONCRETE WITH A MINIMUM OF #4 BARS ON 18" CENTERS BOTH WAYS.
2. ALL DESIGNS MUST MEET THE MINIMUM APPROVED REQUIREMENTS OF THE STANDARD DRIVE APPROACH DIMENSION TABLE.

GENERAL NOTES:

NOTES:
1. REFER TO SECTION 32 16 00 OF CITY OF DENTON SPECIFICATIONS FOR DRIVEWAY APPROACH REQUIREMENTS.
2. JOINTS ARE TO BE SAWED AS SOON AS THE SETTING OF THE CONCRETE WILL PERMIT WITHOUT SPALLING OR MARKING THE SLAB. AN APPROVED CURING COMPOUND SHALL BE APPLIED TO THE FINISHED SLAB PRIOR TO THE LOSS OF SURFACE MOISTURE AND NO LATER THAN 30 MIN. AFTER FINISHING OPERATIONS.
3. SUBGRADE FOR DRIVE APPROACH SHALL MATCH COMPACTION AND STABILIZATION REQUIREMENTS FOR ADJACENT ROADWAY CLASSIFICATION.
4. DRIVE APPROACH GREATER THAN 12' IN WIDTH SHALL HAVE A TOOLED JOINT PERPENDICULAR TO THE CURB LINE, FROM THE FRONT OF THE GUTTER TO THE BACK OF THE DRIVE APPROACH, AT THE MIDPOINT. DRIVE APPROACHES WITH A WIDTH GREATER THAN 24' SHALL HAVE TWO OR MORE PERPENDICULAR TOOLED JOINTS PLACED AT THE DIRECTION OF THE ENGINEER OF RECORD.
5. ALL JOINTS TO BE SEALED PER SPEC. SECTION 32 13 73.
6. DRIVE APPROACH SLOPE REQUIREMENTS ARE SPECIFIED IN SECTION 2.3 OF THE TRANSPORTATION CRITERIA MANUAL.
7. REMOVE AND REPLACE ALL CURB AND GUTTER WITHIN THE LIMITS OF CONSTRUCTION.
8. NEW CURB AND GUTTER SHALL BE POURED MONOLITHIC WITH THE DRIVE APPROACH.
9. FOR RESIDENTIAL DRIVE APPROACHES:
   (a) USE MINIMUM CLASS P2 CONCRETE; MIN. 6" DEPTH.
   (b) USE #4 BARS ON 18" CENTERS BOTH WAYS.
10. FOR ALL OTHER DRIVE APPROACHES, INCLUDING APARTMENTS.
   (a) USE MINIMUM CLASS P2 CONCRETE; MIN. 8" DEPTH.
   (b) USE #4 BARS ON 18" CENTERS, BOTH WAYS.
11. DRIVE APPROACH CONSTRUCTION WHICH EXTENDS PAST THE DRIVE APPROACH RADIUS SHALL HAVE A TRANSVERSE TOOLED JOINT AT THE RADIUS POINT AND AN EXPANSION JOINT AT THE POINT OF CONNECTION TO THE EXISTING OR PROPOSED CURB & GUTTER.
12. PAVEMENT DEPTHS INDICATED ARE MINIMUM AND MAYBE INCREASED UPON RECOMMENDATION OF ENGINEER OF RECORD–PAVEMENT DEPTH SHALL BE CONSISTENT FOR ALL APPLICABLE DETAILS.
13. BARS INDICATED ARE MINIMUM AND MAY BE INCREASED UPON RECOMMENDATION OF ENGINEER OF RECORD–REBAR SIZE SHALL BE CONSISTENT FOR ALL APPLICABLE DETAILS.
14. SEE DETAILS P500, P501, AND P502 FOR TIEING PROPOSED OR EXISTING SIDEWALK TO DRIVEWAY APPROACH.

ENTERED BY	PROJECT #	
DESIGNED BY	DATE	REVISION
CHECKED BY		
PROJ. ENGR.		
PATH S:\Water Engineering\Engr\Design\Projects\Standard Details\Asphalt–Concrete Shared\ASPHALT–CONCRETE–DETAILS.dwg		

CITY OF DENTON
ENGINEERING SERVICES

STANDARD DETAILS
DRIVE APPROACH DETAILS

DATE
JAN. 2023

SHEET No.
18 OF 24

SCALE
HOR 1"= N.T.S.
VER 1"= N.T.S.

CERTIFICATION:
THIS CITY OF DENTON STANDARD DETAIL SHEET IS AUTHORIZED FOR USE IN THIS PROJECT BY THE ENGINEER WHOSE SEAL APPEARS HEREON, AND WHO CERTIFIES THE CONTENT OF THE DETAILS AND NOTES HEREIN HAVE NOT BEEN ALTERED AND ASSUMES RESPONSIBILITY FOR APPROPRIATE USE OF THE STANDARDS WITHIN THIS SHEET.

PLOTTED BY: IBIS HERNANDEZ DATE: 3/16/2023 11:58 AM PATH: P:\3391-05-00700 Land Development\03 Construction Documents\Design\Plot Sheets\PUBLIC DETAILS.dwg

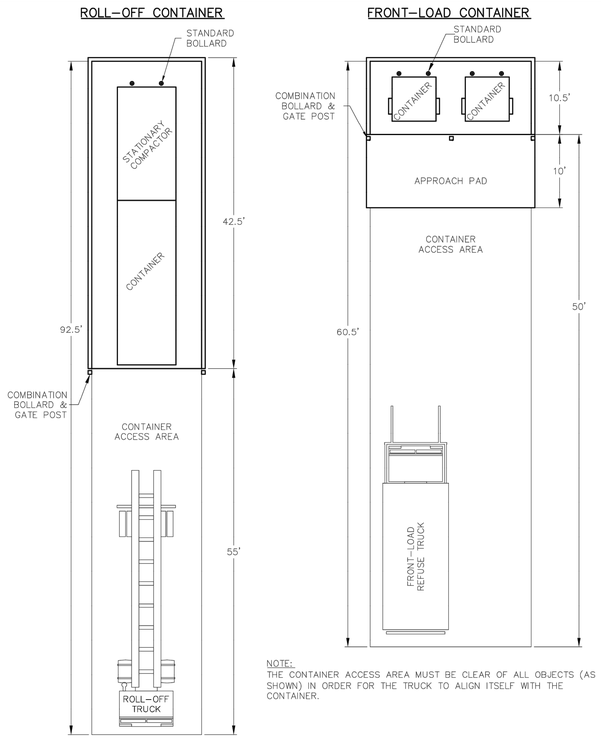

FRONT–LOAD & ROLL–OFF TRUCK ACCESS REQUIREMENTS

DP100

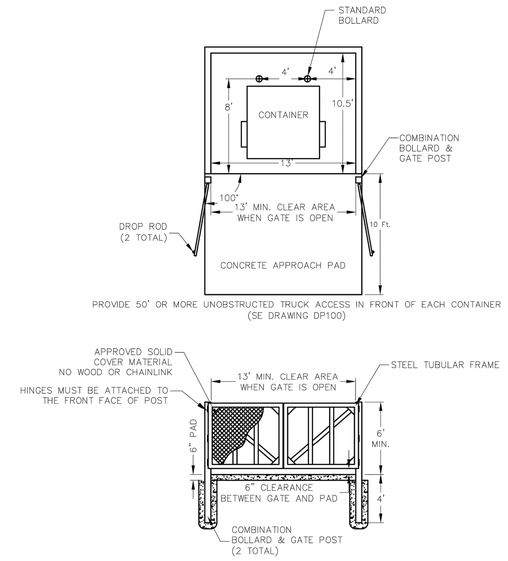

PROVIDE 50' OR MORE UNOBSTRUCTED TRUCK ACCESS IN FRONT OF EACH CONTAINER (SE DRAWING DP100)

CONTAINER ENCLOSURE WITH GATES 13'x10.5' FRONT LOAD

DP200

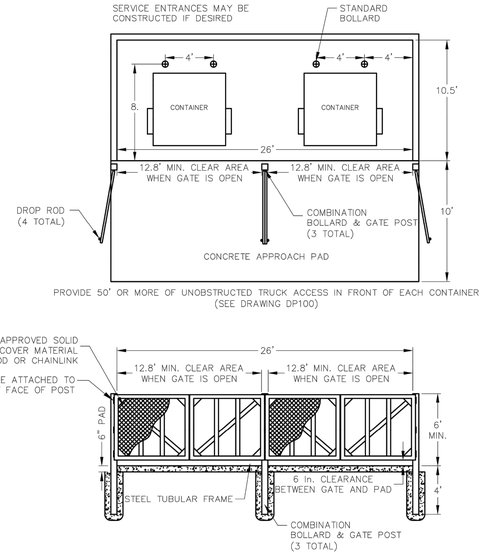

PROVIDE 50' OR MORE OF UNOBSTRUCTED TRUCK ACCESS IN FRONT OF EACH CONTAINER (SEE DRAWING DP100)

CONTAINER ENCLOSURE WITH GATES 26'x10.5' FRONT LOAD

DP201

STANDARD BOLLARD DETAIL
(TO REAR OF CONTAINERS, INSIDE OF ENCLOSURES)

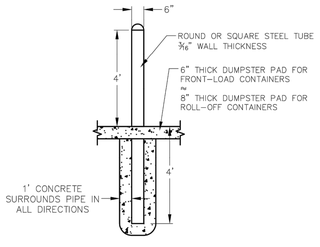

STANDARD BOLLARD AT INSIDE REAR OF ENCLOSURE

DP101

COMBINATION BOLLARD & GATE POST DETAIL

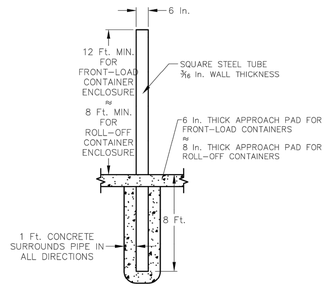

COMBINATION BOLLARD AND GATE POST

DP102

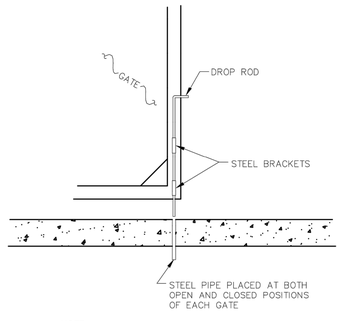

NOTE:
DROP RODS MUST BE MAINTAINED BY THE PROPERTY OWNER.

DROP ROD

DP103

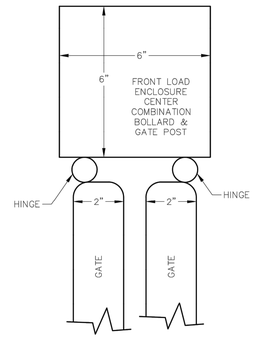

COMBINATION BOLLARD AND GATE MOUNTING DETAIL

DP104

ENTERED BY	PROJECT #	
DESIGNED BY	DATE	REVISION
CHECKED BY		
PROJ. ENGR.		
PATH S:\Water Engineering\Engr\Design\Projects\Standard Details\Solid Waste details\Solid Waste details.dwg		

CITY OF DENTON
ENGINEERING SERVICES

STANDARD DETAILS

DUMPSTER PAD DETAILS

DATE
JAN. 2023

SHEET No.
22 OF 24

SCALE
HOR 1"= N.T.S.
VER 1"= N.T.S.

CERTIFICATION:
THIS CITY OF DENTON STANDARD DETAIL SHEET IS AUTHORIZED FOR USE IN THIS PROJECT BY THE ENGINEER WHOSE SEAL APPEARS HEREON, AND WHO CERTIFIES THE CONTENT OF THE DETAILS AND NOTES HEREIN HAVE NOT BEEN ALTERED AND ASSUMES RESPONSIBILITY FOR APPROPRIATE USE OF THE STANDARDS WITHIN THIS SHEET.

PUBLIC DUMPSTER PAD DETAILS C12.11

PLOTTED BY: IBS HERNANDEZ DATE: 3/16/2023 11:38 AM PATH: P:\2397-00\3700 Land Development\03 Construction Documents\Design\Plot Sheets\PUBLIC DETAILS.dwg

DIVISION 1000 EROSION & SEDIMENT CONTROL

TABLE OF CONTENTS

Drawing #	*Subject*	*Section I: Item #*
1010	**RESERVED**	N/A
1020A	**Silt Fence**	201.5. pages 201-1 to 201-11
1020B	**Silt Fence**	201.5. pages 201-1 to 201-11
	General Notes	
1030A	**Interceptor Swale**	201.6. pages 201-1 to 201-11
1030B	**Interceptor Swale**	201.6. pages 201-1 to 201-11
1040A	**Diversion Dike**	201.7. pages 201-1 to 201-11
1040B	**Diversion Dike**	201.7. pages 201-1 to 201-11
1050A	**Triangular Sediment Filter Dike**	201.8. pages 201-1 to 201-11
1050B	**Triangular Sediment Filter Dike**	201.8. pages 201-1 to 201-11
1060A	**Rock Check Dam**	201.9. pages 201-1 to 201-11
1060B	**Rock Check Dam**	201.9. pages 201-1 to 201-11
1070A	**Stabilized Construction Entrance**	201.11. pages 201-1 to 201-11
1070B	**Stabilized Construction Entrance**	201.11. pages 201-1 to 201-11
1080A	**Sand Bag Check Dam**	201.10. pages 201-1 to 201-11
1080B	**Sand Bag Check Dam**	201.10. pages 201-1 to 201-11
1090	**Stone Outlet**	201.12. pages 201-1 to 201-11
	Sediment Trap	
1100	**Pipe Outlet**	N/A
	Sediment Basin	
1110	**Pipe Slope Drain**	201.13. pages 201-1 to 201-11
1120	**Inlet Protection**	201.14. pages 201-1 to 201-11
	Filter Barrier	
1130	**Inlet Protection-Drop**	201.14. pages 201-1 to 201-11
	Block and Gravel	
1140	**Inlet Protection-Curb**	201.14. pages 201-1 to 201-11
	Block and Gravel	
1150	**Inlet Protection**	201.14. pages 201-1 to 201-11
	Excavated Impoundment	
1060A	**Erosion Control Blankets**	201.15. pages 201-1 to 201-11
1060B	**Erosion Control Blankets**	201.15. pages 201-1 to 201-11

NOTES:

1. The City is adopting use of the NCTCOG Erosion and Sedimentation Standard Detail Drawings referenced in the table above. The drawings can be found in the 4th Edition of the NCTCOG specifications, October 2004.
2. Modifications to the above referenced drawings may be considered for individual projects upon submittal by a registered Professional Engineer in the State of Texas and supporting documentation as to why the modification is being requested.

ENTERED BY	PROJECT #	
DESIGNED BY	DATE	REVISION
CHECKED BY		
PROJ. ENGR.		
PATH S:\Water Engineering\Engr\Design\Projects\Standard Details\ISWM\Erosion and Sedimentation Control sht.24.dwg		

CITY OF DENTON
ENGINEERING SERVICES

STANDARD DETAILS

EROSION & SEDIMENTATION CONTROL DETAILS

DATE
JAN. 2023

SHEET No.
24 OF 24

SCALE
HOR 1"= N.T.S.
VER 1"= N.T.S.

CERTIFICATION:
THIS CITY OF DENTON STANDARD DETAIL SHEET IS AUTHORIZED FOR USE IN THIS PROJECT BY THE ENGINEER WHOSE SEAL APPEARS HEREON, AND WHO CERTIFIES THE CONTENT OF THE DETAILS AND NOTES HEREIN HAVE NOT BEEN ALTERED AND ASSUMES RESPONSIBILITY FOR APPROPRIATE USE OF THE STANDARDS WITHIN THIS SHEET.

PLOTTED BY: ISIS HERNANDEZ DATE: 5/16/2023 11:38 AM PATH: P:\3597-00-02700 Land Development\703 Construction Documents\Design\Plot Sheets\PUBLIC DETAILS.dwg