ROOTS COFFEE CO.

9805 S. YODER ROAD

YODER, 21-3168 KANSAS

REFERENCE LEGEND

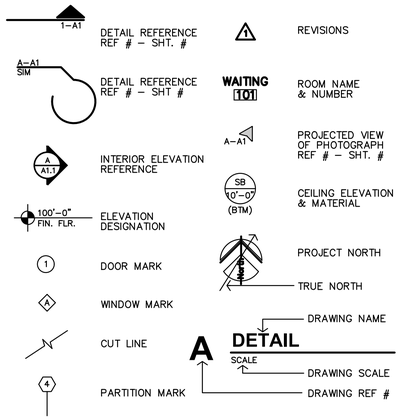

MATERIAL LEGEND

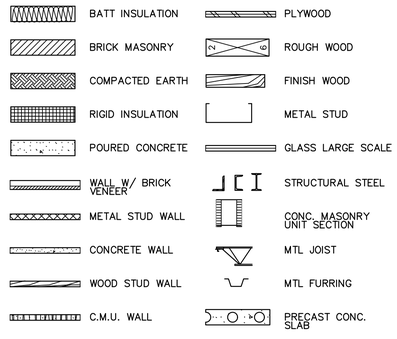

ABBREVIATIONS

&	AND
∠	Angle
@	At
℄	Centerline
ø	Diameter or Round
#	Pound or Number
Acous.	Acoustical
Adj.	Adjustable
A.F.F.	Above Finished Floor
Aggr.	Aggregate
Al.	Aluminum
Approx.	Approximate
Arch.	Architect or Architectural
Asb.	Asbestos
Asph.	Asphalt
A.V.	Audio Visual
Bd.	Board
Bitum.	Bituminous
Bldg.	Building
Blk.	Block
Blk'g.	Blocking
Bm.	Beam
Bot.	Bottom
BO	BY OWNER
Brg.	Bearing
Brk.	Brick
Cab.	Cabinet
Clg.	Ceiling
Clr.	Clear
Cntr.	Counter
Col.	Column
Conc.	Conc. Concrete
C.T.	Ceramic Tile
CMU	Concrete Masonry Unit
Ctr.	Center
Dbl.	Double
Det.	Detail
D.F.	Drinking Fountain
Dia.	Diameter
Dim.	Dimension
Dn.	Down
Dr.	Door
Ds.	Downspout
Dwg.	Drawing
Dwr.	Drawer
(E)	Existing
E.	East or Existing
Ea.	Each
E.J.	Expansion Joint
El.	Elevation
Elec.	Electrical
Elev.	Elevator
Eq.	Equal
Equip.	Equipment
E.W.	Each Way
E.W.C.	Elec. Water Cooler
Exist.	Existing
Expo.	Exposed
Exp.	Expansion
Ext.	Exterior
F.A.	Fire Alarm
F.D.	Floor Drain
Fdn.	Foundation
F.E.	Fire Extinguisher
F.E.C.	F.E. Cabinet
Fin.	Finish
Fl.	Floor
Flash.	Flashing
℄	Flow line
Ft.	Foot or feet
Ftg.	Footing
Furr.	Furring
Fut.	Future
Ga.	Gauge
Galv.	Galvanized
G.B.	Grab Bar
Gl.	Glass
Gnd.	Ground
Gr.	Grade
Gyp.	Gypsum
H.B.	Hose Bibb
H.C.	Hollow Core
Hdwd.	Hardwood
Hdwr.	Hardware
H.M.	Hollow Metal
Horiz.	Horizontal
Hr.	Hour
Hgt.	Height
I.D.	Inside Diameter
Insul.	Insulation
Int.	Interior
Jan	Janitor
Jt.	Joint
Kit.	Kitchen
Lab.	Laboratory
Lam.	Laminate
Lav.	Lavatory
Lkr.	Locker
Lt.	Light
Mas.	Masonry
Max.	Maximum
M.C.	Medicine Cabinet
Mech.	Mechanical
Memb.	Membrane
Met.	Metal
Mfr.	Manufacturer
Mh.	Manhole
Min.	Minimum
Mir.	Mirror
Misc.	Miscellaneous
M.O.	Masonry Opening
Mtd.	Mounted
N.	North
N.I.C.	Not In Contract
No. or #	Number
Nom.	Nominal
N.T.S.	Not To Scale
O/	On or Over
Obs.	Obscure
O.C.	On Center
O.D.	Diameter
Off.	Office
Opng.	Opening
Opp.	Opposite
P.	Paint
Pl.	Plate
P.Lam.	Plastic Laminate
Plas.	Plaster
Plywd.	Plywood
Pr.	Pair
Pt.	Point
P.T.D.	Paper Towel Dispenser
Ptn.	Partition
P.T.R.	Paper Towel Receptacle
Q.T.	Quarry Tile
R.	Riser
Rad.	Radius
R.D.	Roof Drain
Ref.	Reference
Reinf.	Reinforced
Req'd	Required
Resil.	Resilient
Rm.	Room
R.O.	Rough Opening
S.	South
S.B.	Splash Block
S.C.	Solid Core
Sched.	Schedule
S.D.	Soap Dispenser
Sect.	Section
Shr.	Shower
Sht.	Sheet
Sim.	Similar
S.N.D.	Sanitary Napkin Disp.
S.N.R.	Sanitary Napkin Recep.
Spec.	Specification
Sq.	Square
SST.	Stainless Steel
Std.	Standard
St.	Steel
Stor.	Storage
Strl.	Structural
Susp.	Suspended
S.V.	Sheet Vinyl
Sym.	Symmetrical
Tex.	Texture
T.B.	Towel Bar
T.Bd.	Tack Board
Temp.	Tempered
T.&G.	Tongue & Groove
Thk.	Thick
T.O.M.	Top Of Masonry
T.O.S.	Top Of Steel
T.P.	Top Of Pavement
T.P.D.	Toilet Paper Dispenser
T.V.	Television
T.W.	Tackwall
Typ.	Typical
Trd.	Tread
U.O.N.	Unless Otherwise Noted
Ur.	Urinal
V.C.T.	Vinyl Composition Tile
V.T.	Vinyl Tile
V.B.	Vapor Barrier
Vert.	Vertical
Vest.	Vestibule
Vyl.	Vinyl
W.	West
w/	With
w/o	Without
W.C.	Wall Covering
Wd.	Wood
Wp.	Waterproof
Wdw.	Window
Wsct.	Wainscot
Wt.	Weight

JonesGillamRenz

730 N. Ninth St.
Salina, KS 67401
785.827.0386

1881 Main Street, Suite 301
Kansas City, MO 64108
jgr@jgrarchitects.com

SHEET INDEX

GENERAL

COVER
ADA ADA DIAGRAMS
SURVEY

CIVIL

01 SITE & DIMENSION PLAN
02 GRADING & EROSION CONTROL PLAN
03 UTILITY PLAN
04 DETAIL SHEET
05 DETAIL SHEET

ARCHITECTURAL

A1.1 SITE PLAN
A2.1 FLOOR PLANS
A3.1 EXTERIOR ELEVATIONS
A3.2 BUILDING SECTIONS
A3.3 BUILDING SECTIONS
A4.1 WALL SECTIONS
A4.1 WALL SECTIONS
A4.2 WALL SECTIONS
A4.3 WALL SECTIONS
A4.4 WALL SECTIONS
A4.5 WALL SECTIONS
A4.6 WALL SECTIONS
A5.1 ROOF PLAN
A7.1 REFLECTED CEILING PLAN

STRUCTURAL

S0.0 STRUCTURAL GENERAL NOTES
S1.0 FOUNDATION PLAN
S1.1 2ND FLOOR FRAMING PLAN
S2.0 ROOF FRAMING PLAN
S3.0 FOOTING SECTIONS
S4.0 SCHEDULES
S4.1 FRAMING SECTIONS
S4.2 FRAMING SECTIONS

MECHANICAL

ME1.1 M/E SITE PLAN
M0.1 MECHANICAL GENERAL SYMBOLS & SCHEDULES
M1.1 HVAC PLANS & DUCTWORK RISER DIAGRAM
P0.1 PLUMBING GENERAL SYMBOLS & SCHEDULES
P1.1 DRAIN/VENT PLANS & RISER DIAGRAM
P1.2 DOMESTIC WATER WATER PLANS & RISER DIAGRAM

ELECTRICAL

E0.1 ELECTRICAL GENERAL SYMBOLS
E1.1 LIGHTING PLANS & FIXTURE SCHEDULE
E1.2 POWER PLANS & PANEL SCHEDULE

FOOD SERVICE

FS1 FOOD SERVICE FLOOR PLAN & EQUIPMENT SCHEDULE
FS2 FOOD SERVICE ELECTRICAL PLAN & SCHEDULE
FS3 FOOD SERVICE PLUMBING PLAN & SCHEDULE
FS4 HOOD & FAN SCHEDULES
FS5 HOOD & FAN DETAILS
FS6 FIRE SUPPRESSION HOOD

CONSULTANTS

Mechanical & Electrical Engineer ;

LST Consulting Engineers, PA
4809 Vue Du Lac Place, Suite 301
MANHATTAN, KS. 66503
ph. (785) 587-8042
fax (785) 587-8039
mail@LSTengineers.com

Structural Engineer ;

Engineering Consultants
1227 North Main Street
Hutchinson, KS 67501
ph. (620) 665-6394
fax (620) 665-0218
info@echutch.com

9-4-2024

PERMIT SET



Beveled Change in Level

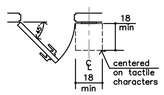

Location of Tactile Signs at Doors

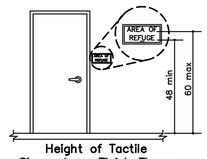

Height of Tactile Signs above Finish Floors

O THRESHOLD ADA DIAGRAMS

NO SCALE

N TACTILE SIGN DIAGRAM

NO SCALE

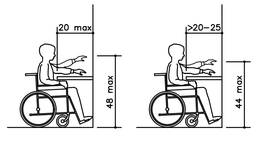

Obstructed High Forward Reach

Unobstructed Forward Reach

Unobstructed Side Reach

Obstructed High Side Reach

M STANDARD REACH ADA DIAGRAMS

NO SCALE

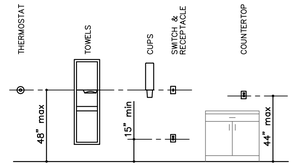

L STANDARD CONTROL REACH LIMITATIONS DETAILS

NO SCALE

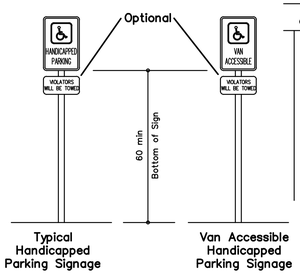

Typical Handicapped Parking Signage

Van Accessible Handicapped Parking Signage

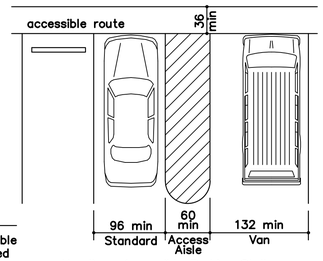

Handicap Accessible Parking Stalls

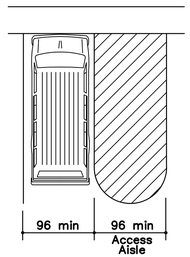

Van Accessible Parking Stall (per 502.2 exception)

K STANDARD PARKING ADA DIAGRAMS

NO SCALE

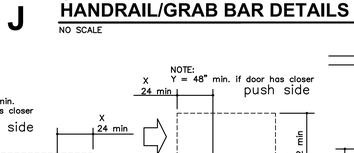

J STANDARD HANDRAIL/GRAB BAR DETAILS

NO SCALE

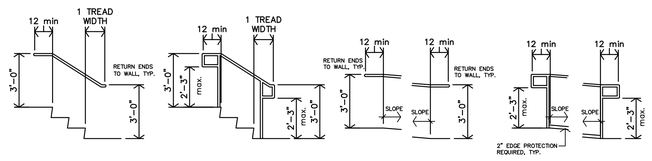

Stair Handrail Extensions at Walls

Stair Handrail Extensions at Freestanding Handrails

Ramp Handrail Extensions at Walls

Ramp Handrail Extensions at Freestanding Handrails

H STANDARD RAMP/STAIR HANDRAIL EXTENSIONS

NO SCALE

LANDINGS SHALL COMPLY WITH STANDARD DOOR APPROACH ADA DIAGRAMS AND SHALL NOT HAVE A CROSS SLOPE GREATER THAN 1:50 AND SHALL NOT SLOPE IN THE DIRECTION OF TRAVEL GREATER THAN 1:50.

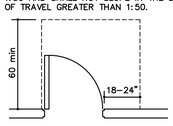

Exterior Landing

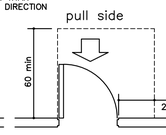

Front Approach — Swinging Door

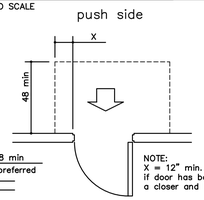

Front Approach — Swinging Door

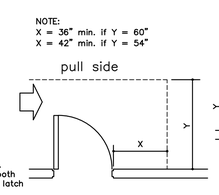

Hinge Side Approach — Swinging Door

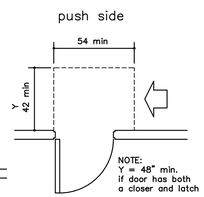

Side Approach — Swinging Door

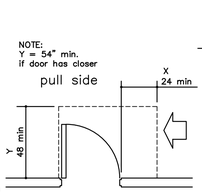

Latch Side Approach Swinging Door

Latch Side Approach Swinging Door

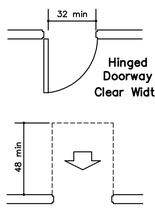

Front Approach — Sliding or Folding Doors

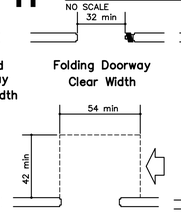

Side Approach — Sliding or Folding Doors

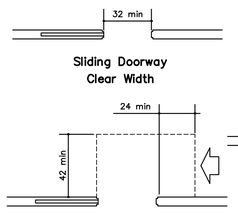

Stop or Latch Side Approach — Sliding or Folding Doors

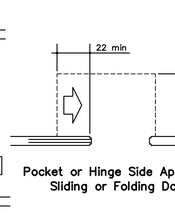

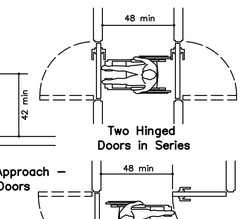

G STANDARD DOOR APPROACH ADA DIAGRAMS

NO SCALE

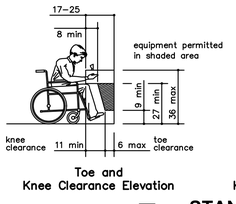

Toe and Knee Clearance Elevation

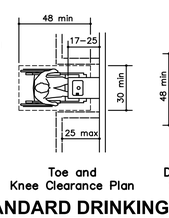

Toe and Knee Clearance Plan



Drinking Fountain Spout Location

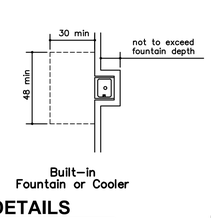

Built–in Fountain or Cooler

F STANDARD DRINKING FOUNTAIN DETAILS

NO SCALE

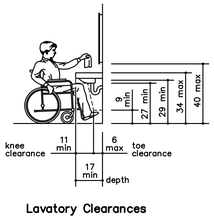

Lavatory Clearances

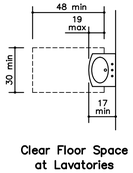

Clear Floor Space at Lavatories

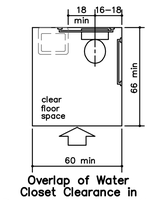

Overlap of Water Closet Clearance in Residential Dwelling Units (Exception)

E STANDARD LAVATORY DETAILS

NO SCALE

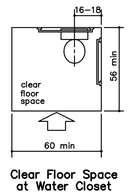

Clear Floor Space at Water Closet

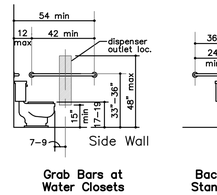

Grab Bars at Water Closets

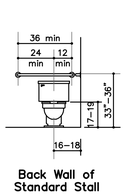

Back Wall of Standard Stall

D STANDARD TOILET ADA DIAGRAMS

NO SCALE

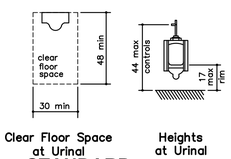

Clear Floor Space at Urinal

Heights at Urinal

C STANDARD URINAL ADA DIAGRAMS

NO SCALE

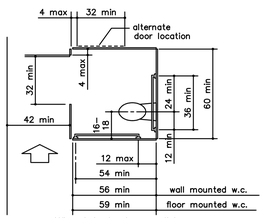

Wheelchair Accessible Toilet Compartment

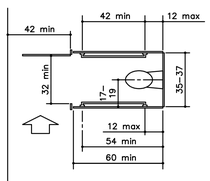

Ambulatory Accessible Toilet Compartment

B STANDARD TOILET STALL ADA DIAGRAMS

NO SCALE

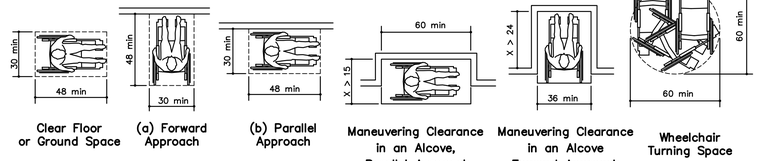

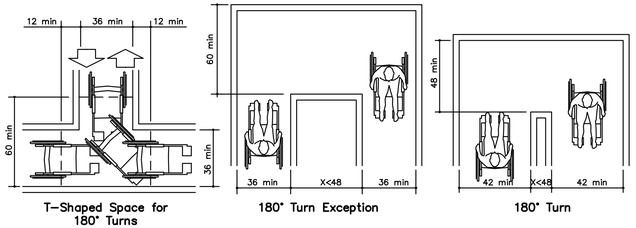

A STANDARD ADA DIAGRAMS

NO SCALE

FOR REFERENCE ONLY

JonesGillamRenz
730 N. Ninth
Salina, KS 67401
1881 Main Street, Suite 301
Kansas City, MO 64108
785.827.0386
jgr@jgrarchitects.com

ROOTS COFFEE CO.
9805 S. YODER ROAD
YODER, KANSAS

JEFFREY S. GILLAM LICENSED 33824 KANSAS PROFESSIONAL ARCHITECT

REVISION:

DATE: 9-4-2024
JOB: 21-3168
SHEET NO.:

ADA

COPYRIGHTED©

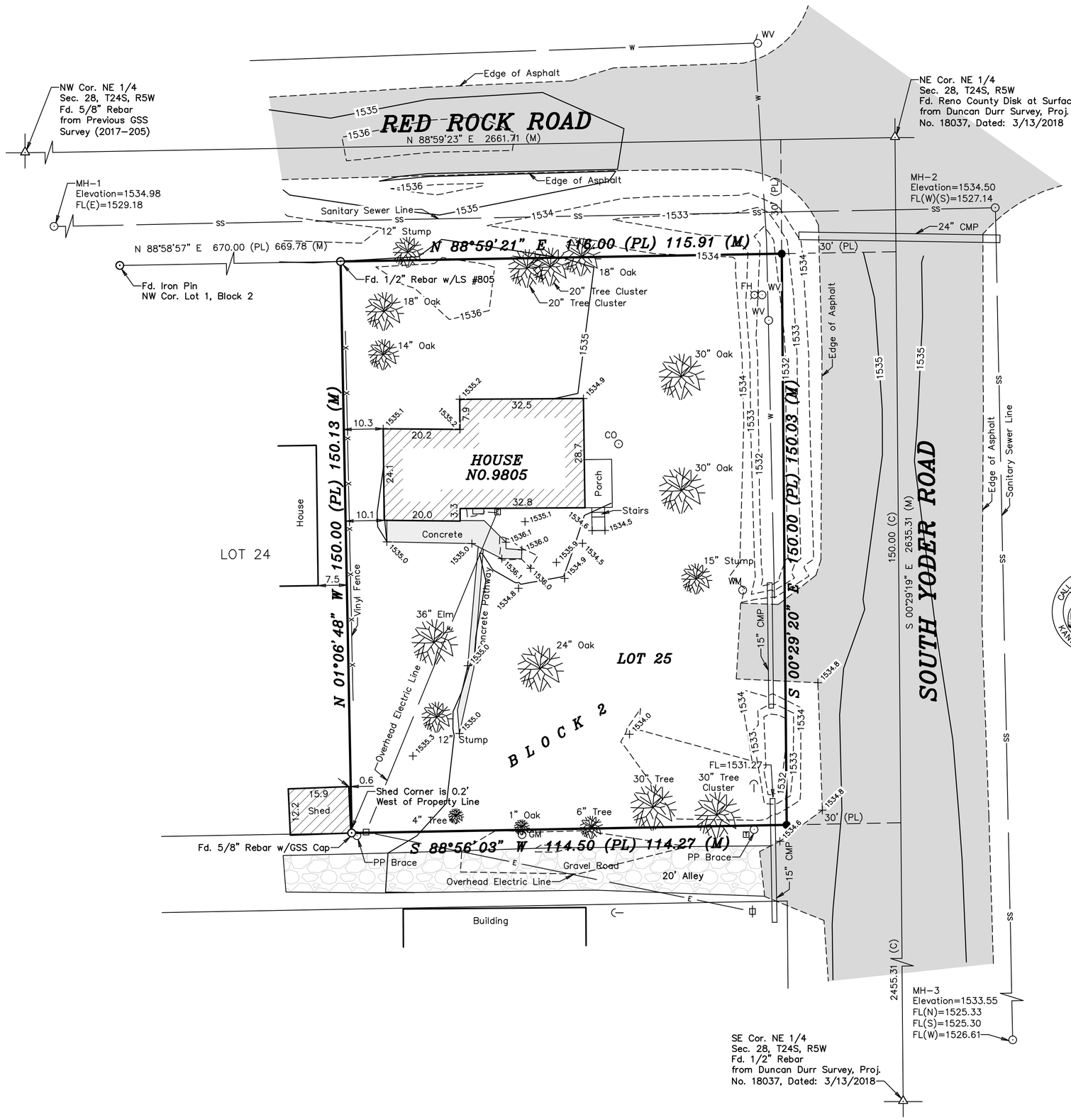

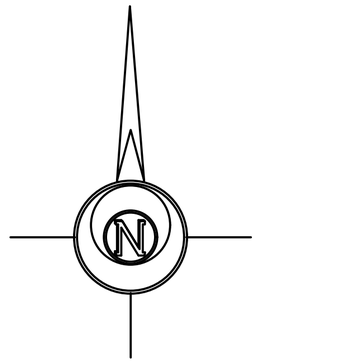

BASIS OF BEARING = NAD 83 KANSAS SOUTH ZONE

LEGEND

- △ – Sectional Monument Found
- ○ – Survey Monument Found
- ● – 5/8" x 24" Iron Rebar Set w/G.S.S. Cap
- CO – Sanitary Sewer Cleanout
- –x– – Fence
- FH – Fire Hydrant
- GA – Guy Anchor
- GM – Gas Meter
- MH – Sanitary Sewer Manhole
- T – Underground Telephone Pedestal
- E – Electric Meter
- WM – Water Meter
- WV – Water Valve
- (C) – Calculated
- (M) – Measured
- (PL) – Platted

DESCRIPTION OF RECORD: (Book 684, Page 10)
Lot 25, Block 2, City of Yoder, Reno County, Kansas.

DIGSAFE:
Utilities shown were located by respective owners. Any Utilities not shown are due to no response to Kansas One Call "1-800-DIG-SAFE" Ticket #21515516.

Utility locations shown hereon are based on information received from Kansas One-Call (1-800-DIG-SAFE) identified by Ticket #21515516 on October 6, 2021. Before any digging, contractor should verify utility locations by calling 1-800-DIG-SAFE.

BENCHMARK:
5/8" Rebar w/Red GSS Cap Approximately 322 feet West and 21 feet North of the Intersection of Red Rock Road & Mayfield Road.
Elevation=1498.60 (NAVD 88)

SURVEYOR'S CERTIFICATE:
I hereby certify this plat to be a true, correct and complete representation of the property described hereon, as surveyed under my supervision, this 1st day of December, 2021.

DANIEL E. GARBER LICENSED PS-683 KANSAS PROFESSIONAL SURVEYOR

TOPOGRAPHIC SURVEY

Prepared For: KENDRA HORST	*Description:* LOT 25, BLOCK 2 ORIGINAL TOWN OF YODER RENO COUNTY, KANSAS

Prepared By: **Garber Surveying Service, P.A.**

GSS™ HUTCHINSON 2908 North Plum St. 67502 Ph. 620-665-7032 (Main Office)

BRANCH OFFICES: MANHATTAN Ph. 785-320-4810; MCPHERSON Ph. 620-241-4441; NEWTON Ph. 316-283-5053; SALINA Ph. 785-404-6302; WICHITA Ph. 316-260-9933

Drawn By: EWS	Scale: 1"=20'	Date of Field Work: October 20, 2021	Job No: G2021-847
Checked By: DEG	Date: 12/01/2021	Sheet 1 of 1 Sheet(s)	

Copyright © 2020 Garber Surveying Service, P.A. Saved 12/1/2021 9:40:16 AM by ESCHOENECKER
Plot Date & Time Tuesday, December 14, 2021 9:07:42 AM Dwg Path U:\LDD_GSSFILES\2021\20210847 C3d\dwg\20210847 SPC_1502 (ModtoGnd) NAVD88 SF NAD83 SPC_1502 (ModtoGnd) NAVD88

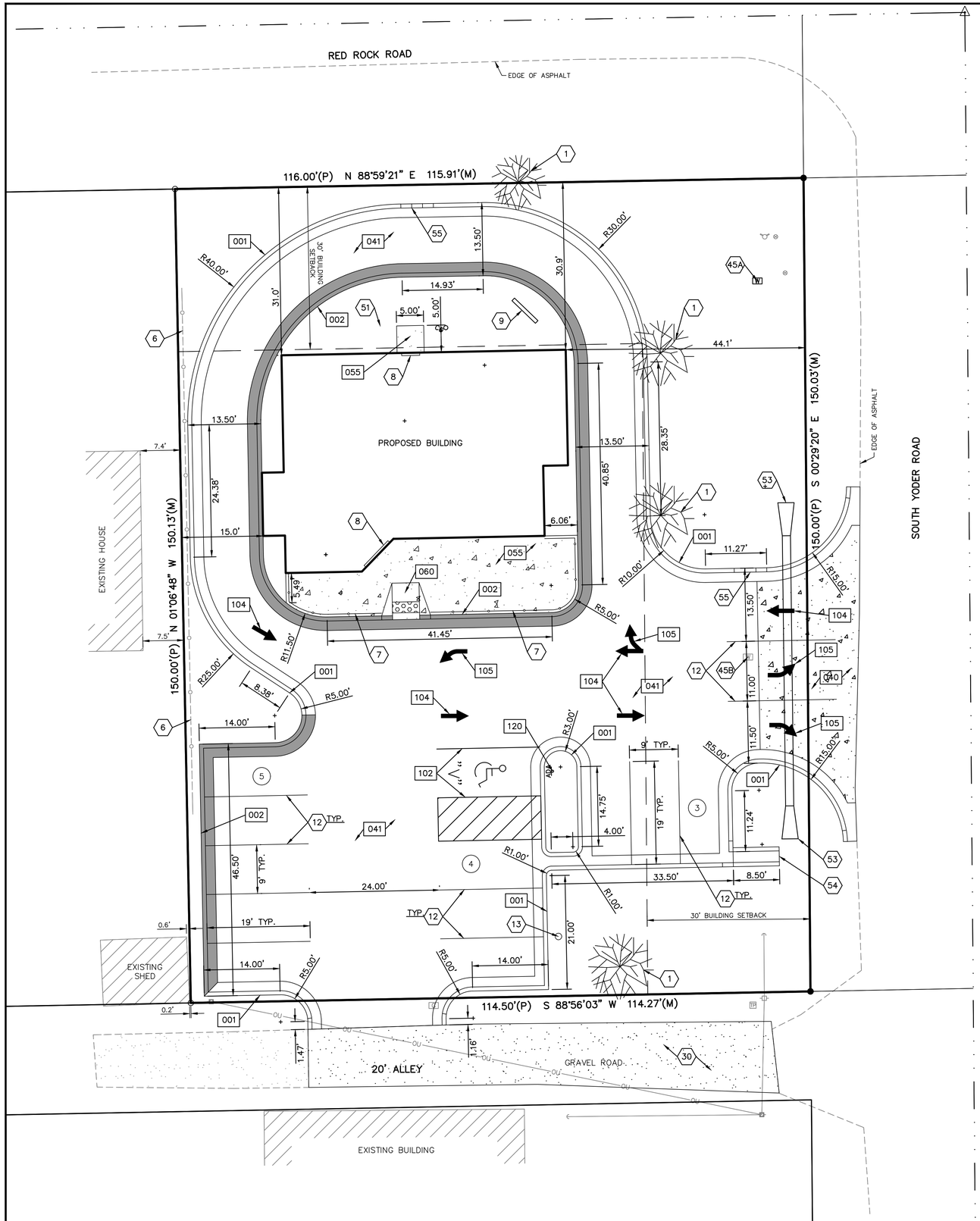

PAVING LEGEND

- REGULAR DUTY PAVING (040)
- CONCRETE SIDEWALK (055)
- CONCRETE CURB AND GUTTER (001)
- CONCRETE CURB AND GUTTER WITH REVERSE FLOW "DRY CURB" (002)
- (3) PARKING STALL COUNT

0 5 10 20

SCALE: 1" = 10'

DETAILS – SEE DETAIL SHEET NO. 04 FOR THE FOLLOWING DETAILS

001	CONCRETE CURB AND GUTTER
002	CONCRETE CURB AND GUTTER W/ REVERSE FLOW IN GUTTER
040	REGULAR DUTY CONCRETE PAVING
041	REGULAR DUTY ASPHALT PAVING
055	CONCRETE SIDEWALK
060	SIDEWALK RAMPS
102	ACCESSIBLE STRIPING
104	TRAFFIC FLOW ARROW
105	TRAFFIC FLOW ARROW
120	ACCESSIBLE PARKING SIGNAGE

NOTES:

1	EXISTING TREE TO REMAIN, PROTECT FROM DAMAGE DURING CONSTRUCTION
6	PRIVACY FENCE (COORDINATE WITH OWNER)
7	RAILING (COORDINATE WITH OWNER)
8	ENTRY (SEE ARCH. PLANS)
9	MENU BOARD (SEE ARCH. PLANS)
12	WHITE PARKING LOT STRIPING (SHERWIN–WILLIAMS TM 2160 LEAD FREE OR APPROVED EQUAL)
13	HITCHING POST (SEE ARCH. PLANS)
30	CONTRACTOR TO ADD GRAVEL TO ALLEY TO PROVIDE POSITIVE DRAINAGE TO EXISTING DITCH (SEE GRADING PLAN)
45A	WATER METER (SEE UTILITY PLAN)
45B	EXISTING WATER METER TO BE REMOVED PER CITY AND COUNTY SPECIFICATIONS
51	CLEAN–OUT (SEE UTILITY PLAN)
53	STORM SEWER STRUCTURE (SEE GRADING PLAN)
54	CONCRETE DRAINAGE FLUME (SEE GRADING PLAN)
55	CURB CUT (SEE GRADING PLAN)

NOTE:
1. CONTRACTOR SHALL REFER TO ARCHITECTURAL PLANS FOR EXACT LOCATIONS AND DIMENSIONS OF ENTRANCE, SLOPED PAVING, EXIT PORCHES, RAMPS, TRUCK DOCKS, PRECISE BUILDING DIMENSIONS AND EXACT BUILDING UTILITY ENTRANCE LOCATIONS.

2. THESE PLANS HAVE NOT BEEN VERIFIED WITH FINAL ARCHITECTURAL CONTRACT DRAWINGS. CONTRACTOR SHALL VERIFY AND NOTIFY THE ENGINEER OF ANY DISCREPANCIES. CONTRACTOR IS FULLY RESPONSIBLE FOR REVIEW AND COORDINATION OF ALL DRAWINGS AND CONTRACTOR DOCUMENTS.

3. ALL DIMENSIONS ARE TO BACK OF CURB UNLESS NOTED OTHERWISE.

4. ALL DIMENSIONS ARE PERPENDICULAR TO PROPERTY LINE.

5. ACTUAL SIGN LOCATIONS TO BE COORDINATED WITH CONSTRUCTION MANAGER.

SURVEY STATEMENT:
ALL EXISTING ELEVATIONS, UNDERGROUND UTILITIES, EXISTING STRUCTURES, AND ALL OTHER SURVEY INFORMATION HEREON ARE FROM FIELD SURVEY INFORMATION PROVIDED BY GARBER SURVEYING SERVICES, P.A., DATED 12–01–2021

CONSTRUCTION NOTES:
1. COORDINATE START–UP AND ALL CONSTRUCTION ACTIVITIES WITH OWNER.

2. CONSTRUCTION METHODS AND MATERIALS NOT SPECIFIED IN THESE PLANS ARE TO MEET OR EXCEED THE RENO COUNTY STANDARD SPECIFICATIONS.

3. ALL CONSTRUCTION WORK AND UTILITY WORK OUTSIDE OF PROPERTY BOUNDARIES SHALL BE PERFORMED IN COOPERATION WITH AND IN ACCORDANCE WITH REGULATIONS OF THE AUTHORITIES CONCERNED.

4. PUBLIC CONVENIENCE AND SAFETY: THE CONTRACTOR SHALL CONDUCT THE WORK IN A MANNER THAT WILL INSURE, AS FAR AS PRACTICABLE, THE LEAST OBSTRUCTION TO TRAFFIC, AND SHALL PROVIDE FOR THE CONVENIENCE AND SAFETY OF THE GENERAL PUBLIC AND RESIDENTS ALONG AND ADJACENT TO HIGHWAYS IN THE CONSTRUCTION AREA.

5. ONE IN EIGHT ACCESSIBLE PARKING STALLS MUST HAVE A SIGN DESIGNATING "VAN–ACCESSIBLE". SEE DETAIL 102 AND 120.

6. ALL TRAFFIC CONTROL DEVICES, INSTALLATION AND OPERATIONS SHALL CONFORM WITH THE "MANUAL ON UNIFORM TRAFFIC CONTROL DEVICES".

7. PAINT FOR STRIPING ON PUBLIC STREETS, HIGHWAYS AND ENTRANCES SHALL BE REFLECTORIZED PAINT CONFORMING TO THE SPECIFICATIONS OR REQUIREMENTS OF THE AUTHORITY GOVERNING THE STREET OR HIGHWAY.

SAFETY NOTICE TO CONTRACTOR
IN ACCORDANCE WITH GENERALLY ACCEPTED CONSTRUCTION PRACTICES, THE CONTRACTOR SHALL BE SOLELY AND COMPLETELY RESPONSIBLE FOR CONDITIONS OF THE JOB SITE, INCLUDING SAFETY OF ALL PERSONS AND PROPERTY DURING PERFORMANCE OF THE WORK. THIS REQUIREMENT WILL APPLY CONTINUOUSLY AND NOT BE LIMITED TO NORMAL WORKING HOURS.

WARRANTY / DISCLAIMER
THE DESIGNS REPRESENTED IN THESE PLANS ARE IN ACCORDANCE WITH ESTABLISHED PRACTICES OF CIVIL ENGINEERING FOR THE DESIGN FUNCTIONS AND USES INTENDED BY THE OWNER AT THIS TIME. HOWEVER, NEITHER KAW VALLEY ENGINEERING, INC NOR ITS PERSONNEL, CAN OR DO WARRANT THESE DESIGNS OR PLANS AS CONSTRUCTED, EXCEPT IN THE SPECIFIC CASES WHERE KAW VALLEY ENGINEERING PERSONNEL INSPECT AND CONTROL THE PHYSICAL CONSTRUCTION ON A CONTEMPORARY BASIS AT THE SITE.

CAUTION – NOTICE TO CONTRACTOR
THE CONTRACTOR IS SPECIFICALLY CAUTIONED THAT THE LOCATION AND/OR ELEVATION OF EXISTING UTILITIES AS SHOWN ON THESE PLANS IS BASED ON RECORDS OF THE VARIOUS UTILITY COMPANIES AND, WHERE POSSIBLE, MEASUREMENTS TAKEN IN THE FIELD. THE INFORMATION IS NOT TO BE RELIED ON AS BEING EXACT OR COMPLETE. THE CONTRACTOR SHALL CALL THE APPROPRIATE UTILITY COMPANY AT LEAST 72 HOURS BEFORE ANY EXCAVATION TO REQUEST EXACT FIELD LOCATION OF UTILITIES. IT SHALL BE THE RESPONSIBILITY OF THE CONTRACTOR TO RELOCATE ALL EXISTING UTILITIES WHICH CONFLICT WITH PROPOSED IMPROVEMENTS SHOWN ON THE PLANS.
THE CONTRACTOR SHALL EXPOSE EXISTING UTILITIES AT LOCATIONS OF POSSIBLE CONFLICTS PRIOR TO ANY CONSTRUCTION.

REV	DATE	DESCRIPTION	DSN	DWN	CHK
0	09/04/24	INITIAL ISSUE	MJR	TDA	MJR

MATTHEW J. ROWE
ENGINEER
KS # 29241

KAW VALLEY ENGINEERING
1622 SUNFLOWER LANE
SALINA, KANSAS 67401
PH: (785) 823–3400
sd@kveng.com | www.kveng.com

KAW VALLEY ENGINEERING, INC., IS AUTHORIZED TO OFFER ENGINEERING SERVICES IN KANSAS. KANSAS SITE CERTIFICATE OF AUTHORIZATION # E-115. EXPIRES 12/31/24

ROOTS COFFEE COMPANY
YODER & RED ROCK ROAD
RENO COUNTY, KANSAS

CIVIL PLANS
SITE & DIMENSION PLAN

PROJ. NO.	E24D3817
DESIGNER	MJR
DRAWN BY	TDA
CFN	3817SP
SHEET	01
REV	0

THIS DRAWING SHALL NOT BE UTILIZED BY ANY PERSON, FIRM, OR CORPORATION IN WHOLE OR IN PART WITHOUT THE SPECIFIC PERMISSION OF KAW VALLEY ENGINEERING, INC.

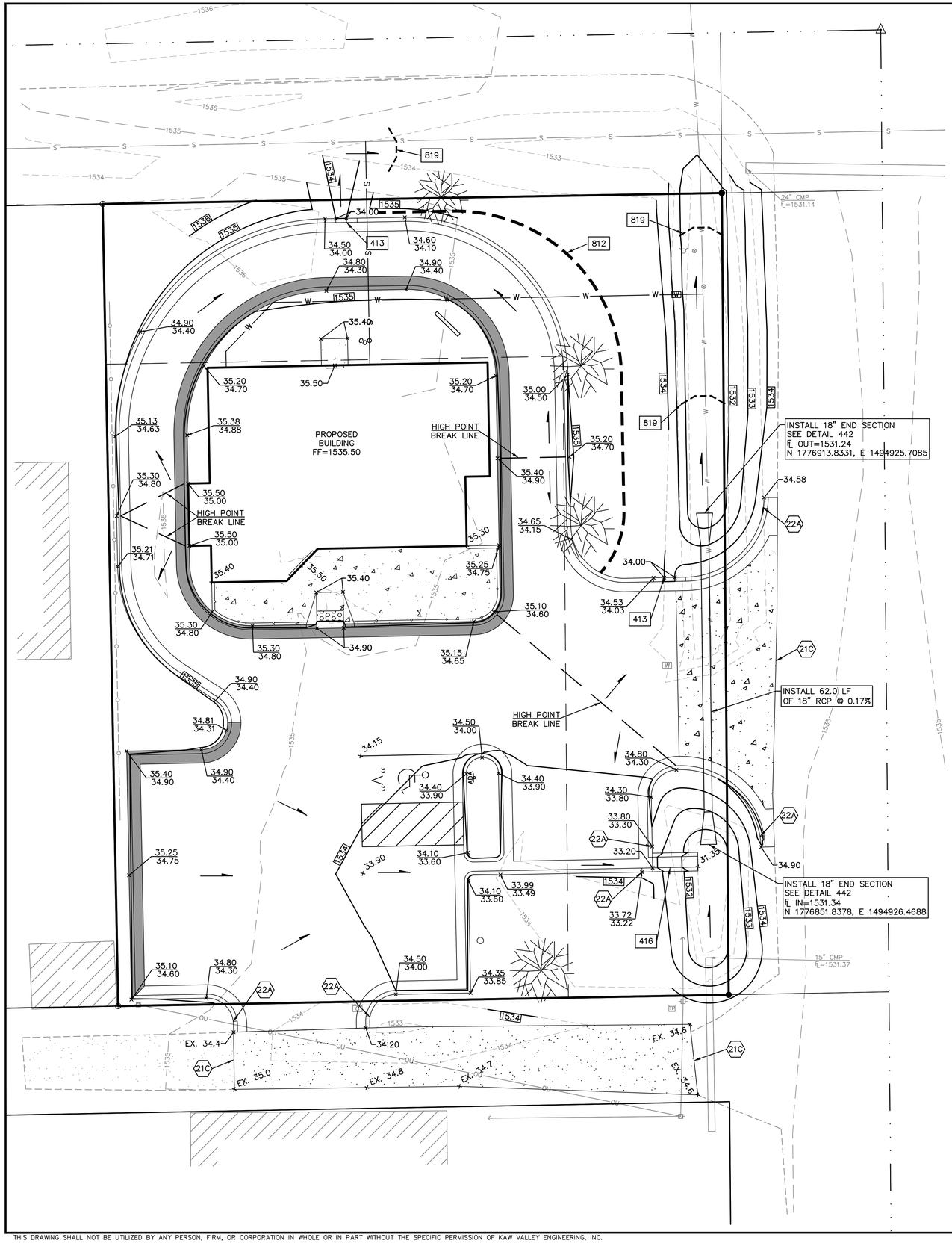

SCALE: 1" = 10'

NOTE:
1. CONTRACTOR SHALL REFER TO ARCHITECTURAL PLANS FOR EXACT LOCATIONS AND DIMENSIONS OF ENTRANCE, SLOPED PAVING, EXIT PORCHES, RAMPS, TRUCK DOCKS, PRECISE BUILDING DIMENSIONS AND EXACT BUILDING UTILITY ENTRANCE LOCATIONS.

2. THESE PLANS HAVE NOT BEEN VERIFIED WITH FINAL ARCHITECTURAL CONTRACT DRAWINGS. CONTRACTOR SHALL VERIFY AND NOTIFY THE ENGINEER OF ANY DISCREPANCIES. CONTRACTOR IS FULLY RESPONSIBLE FOR REVIEW AND COORDINATION OF ALL DRAWINGS AND CONTRACT DOCUMENTS.

SAFETY NOTICE TO CONTRACTOR
IN ACCORDANCE WITH GENERALLY ACCEPTED CONSTRUCTION PRACTICES, THE CONTRACTOR SHALL BE SOLELY AND COMPLETELY RESPONSIBLE FOR CONDITIONS OF THE JOB SITE, INCLUDING SAFETY OF ALL PERSONS AND PROPERTY DURING PERFORMANCE OF THE WORK. THIS REQUIREMENT WILL APPLY CONTINUOUSLY AND NOT BE LIMITED TO NORMAL WORKING HOURS.

WARRANTY / DISCLAIMER
THE DESIGNS REPRESENTED IN THESE PLANS ARE IN ACCORDANCE WITH ESTABLISHED PRACTICES OF CIVIL ENGINEERING FOR THE DESIGN FUNCTIONS AND USES INTENDED BY THE OWNER AT THIS TIME. HOWEVER, NEITHER KAW VALLEY ENGINEERING, INC NOR ITS PERSONNEL CAN OR DO WARRANTY THESE DESIGNS OR PLANS AS CONSTRUCTED, EXCEPT IN THE SPECIFIC CASES WHERE KAW VALLEY ENGINEERING PERSONNEL INSPECT AND CONTROL THE PHYSICAL CONSTRUCTION ON A CONTEMPORARY BASIS AT THE SITE.

CAUTION – NOTICE TO CONTRACTOR
THE CONTRACTOR IS SPECIFICALLY CAUTIONED THAT THE LOCATION AND/OR ELEVATION OF EXISTING UTILITIES AS SHOWN ON THESE PLANS IS BASED ON RECORDS OF THE VARIOUS UTILITY COMPANIES AND, WHERE POSSIBLE, MEASUREMENTS TAKEN IN THE FIELD. THE INFORMATION IS NOT TO BE RELIED ON AS BEING EXACT OR COMPLETE. THE CONTRACTOR SHALL CALL THE APPROPRIATE UTILITY COMPANY AT LEAST 72 HOURS BEFORE ANY EXCAVATION TO REQUEST EXACT FIELD LOCATION OF UTILITIES. IT SHALL BE THE RESPONSIBILITY OF THE CONTRACTOR TO RELOCATE ALL EXISTING UTILITIES WHICH CONFLICT WITH PROPOSED IMPROVEMENTS SHOWN ON THE PLANS.
THE CONTRACTOR SHALL EXPOSE EXISTING UTILITIES AT LOCATIONS OF POSSIBLE CONFLICTS PRIOR TO ANY CONSTRUCTION.

THE COORDINATES PROVIDED ON THIS PLAN ARE FOR INFORMATION AND CHECKING PURPOSES ONLY. IT IS THE CONTRACTOR'S RESPONSIBILITY TO CALCULATE CONSTRUCTION STAKING COORDINATES ACCORDING TO THE DIMENSIONS SHOWN ON THESE PLANS. CONTRACTOR SHALL VERIFY THE ACCURACY OF THE COORDINATES SHOWN HEREON BEFORE CONSTRUCTION.

EROSION & PROPOSED IMPROVEMENTS LEGEND:

- 82.95 X — SPOT ELEVATION (ADD 1500) / TOP OF PAVEMENT
- 34.90 / 34.40 — TOP OF CURB (ADD 1500) / FLOWLINE OF CURB (ADD 1500)
- FLOW DIRECTION
- 1535 — EXISTING GROUND CONTOUR (1' INTERVALS)
- 1535 — PROPOSED FINISHED GROUND CONTOUR (1' INTERVALS)
- HIGH POINT BREAK LINE
- SEDIMENTATION FENCE
- STRAW WATTLE

DETAILS – SEE DETAIL SHEETS NO. 04–05 FOR THE FOLLOWING DETAILS

413 CURB CUT
416 CONCRETE DRAINAGE FLUME
442 END SECTION
812 SEDIMENTATION FENCE
819 WATTLE INSTALLATION

NOTES:

21C MATCH EXISTING PAVEMENT ELEVATIONS
22A TAPER CURB FROM 6" TO 0" IN 2'–0"

IF DISCREPANCIES EXIST BETWEEN THE GRADING NOTES BELOW AND THE RECOMMENDATIONS OUTLINED IN THE PROJECT GEOTECHNICAL REPORT, THE RECOMMENDATIONS OUTLINED IN THE GEOTECHNICAL REPORT SHALL GOVERN.

GRADING NOTES:
1. THE CONSTRUCTION AREA SHALL BE CLEARED, GRUBBED, AND STRIPPED OF TOPSOIL AND ORGANIC MATTER FROM ALL AREAS TO BE OCCUPIED BY BUILDING AND PAVING. TOPSOIL FOR REPLACEMENT ON SLOPES MAY BE STOCKPILED ON SITE. EXCESS TOPSOIL MAY BE WASTED IN FILL SLOPES PROVIDED THAT NO TOPSOIL WILL BE WASTED WITHIN 10 FEET OF THE EDGE OF THE BUILDING OR PARKING AREA. BURNING OF TIMBER WILL NOT BE PERMITTED UNLESS APPROVAL IS OBTAINED FROM GOVERNING OFFICIALS. STRIPPING EXISTING TOPSOIL AND ORGANIC MATTER SHALL BE TO A MINIMUM DEPTH OF 6 INCHES.

2. AREAS TO RECEIVE FILL SHALL BE SCARIFIED AND THE TOP 8–INCH DEPTH COMPACTED TO 95% STANDARD PROCTOR DENSITY. ANY UNSUITABLE AREAS SHALL BE UNDERCUT AND REPLACED WITH SUITABLE MATERIAL BEFORE ANY FILL MATERIAL CAN BE APPLIED.

3. OFF–SITE FILL MATERIAL SHALL HAVE A PLASTICITY INDEX OF 25 OR LESS, A LIQUID LIMIT OF 45 OR LESS AND CONTAIN NO ROCK LARGER THAN THREE INCHES. OFF–SITE FILL MATERIAL SHALL BE APPROVED BY THE OWNER PRIOR TO BRINGING ON SITE.

4. EARTHWORK UNDER THE BUILDING SHALL COMPLY WITH THE PROJECT ARCHITECTURAL PLANS. OTHER FILL MATERIAL SHALL BE MADE IN LIFTS NOT TO EXCEED EIGHT INCHES DEPTH COMPACTED TO 95% STANDARD PROCTOR DENSITY. FILL MATERIAL MAY INCLUDE ROCK FROM ON–SITE EXCAVATION IF CAREFULLY PLACED SO THAT LARGE STONES ARE WELL DISTRIBUTED AND VOIDS ARE COMPLETELY FILLED WITH SMALLER STONES, EARTH, SAND OR GRAVEL TO FURNISH A SOLID EMBANKMENT. NO ROCK LARGER THAN THREE INCHES IN ANY DIMENSION NOR ANY SHALE SHALL BE PLACED IN THE TOP 12 INCHES OF EMBANKMENT.

5. AREAS THAT ARE TO BE CUT TO SUBGRADE LEVELS SHALL BE PROOF ROLLED WITH A MODERATELY HEAVY LOADED DUMP TRUCK OR SIMILAR APPROVED CONSTRUCTION EQUIPMENT TO DETECT UNSUITABLE SOIL CONDITIONS.

6. IN ALL AREAS OF EXCAVATION, IF UNSUITABLE SOIL CONDITIONS ARE ENCOUNTERED, A QUALIFIED GEOTECHNICAL ENGINEER SHALL RECOMMEND TO THE OWNER THE METHODS OF UNDERCUTTING AND REPLACEMENT OF PROPERLY COMPACTED, APPROVED FILL MATERIAL. ALL PROOFROLLING AND UNDERCUTTING SHOULD BE PERFORMED DURING A PERIOD OF DRY WEATHER.

7. THE CONTRACTOR SHALL BE RESPONSIBLE FOR THE CONTROL OF DUST AND DIRT RISING AND SCATTERING IN THE AIR DURING CONSTRUCTION AND SHALL PROVIDE WATER SPRINKLING OR OTHER SUITABLE METHODS OF CONTROL. THE CONTRACTOR SHALL COMPLY WITH ALL GOVERNING REGULATIONS PERTAINING TO ENVIRONMENTAL PROTECTION.

8. ALL SLOPES ARE TO BE 3:1 OR FLATTER UNLESS OTHERWISE INDICATED.

9. ALL SLOPES EXCEEDING 3:1 SHALL BE PROTECTED BY RIP RAP, CONCRETE PAVING, OR OTHER METHODS INDICATED ON THESE PLANS, THAT WILL PREVENT EROSION AND PLACED SUCH THAT THE SURFACE IS FLUSH WITH SURROUNDING GROUND AND SHAPED TO CHANNEL WATER IN DIRECTIONS INDICATED.

10. ALL SLOPES AND AREAS DISTURBED BY CONSTRUCTION SHALL BE GRADED SMOOTH AND FOUR INCHES OF TOPSOIL APPLIED. IF ADEQUATE TOPSOIL IS NOT AVAILABLE ON–SITE, THE CONTRACTOR SHALL PROVIDE TOPSOIL, APPROVED BY THE OWNER, AS NEEDED. THE AREA SHALL THEN BE SEEDED, FERTILIZED, MULCHED, WATERED AND MAINTAINED UNTIL HARDY GRASS GROWTH IS ESTABLISHED IN ALL AREAS. ANY AREAS DISTURBED FOR ANY REASON SHALL BE CORRECTED BY THE CONTRACTOR AT NO ADDITIONAL COST TO THE OWNER PRIOR TO FINAL ACCEPTANCE OF THE PROJECT.

11. CONTRACTOR SHALL USE SILT FENCE, BALES OF HAY OR OTHER MEANS OF CONTROLLING EROSION ALONG THE EDGE OF THE PROPERTY OR OTHER BOTTOM OF SLOPE LOCATIONS.

12. CONTRACTOR IS TO REMOVE AND DISPOSE OF ALL DEBRIS, RUBBISH AND OTHER MATERIALS RESULTING FROM PREVIOUS AND CURRENT DEMOLITION OPERATIONS.

13. THE CONTRACTOR SHALL TAKE ALL PRECAUTIONS NECESSARY TO AVOID PROPERTY DAMAGE TO ADJACENT PROPERTIES DURING THE CONSTRUCTION PHASES OF THIS PROJECT. THE CONTRACTOR WILL BE HELD SOLELY RESPONSIBLE FOR ANY DAMAGES TO THE ADJACENT PROPERTIES OCCURRING DURING THE CONSTRUCTION PHASES OF THIS PROJECT.

14. IT IS NOT THE DUTY OF THE ENGINEER OR THE OWNER TO REVIEW THE ADEQUACY OF THE CONTRACTOR'S SAFETY MEASURES, IN, ON OR NEAR THE CONSTRUCTION SITE AT ANY TIME DURING CONSTRUCTION.

16. PIPE LENGTHS ARE CENTER TO CENTER OF STRUCTURE OR TO END OF END SECTIONS.

17. HANDICAP STALLS SHALL MEET ADA REQUIREMENTS AND SHALL NOT EXCEED 2% SLOPE IN ANY DIRECTION AT THE BUILDING ENTRY AND ACCESSIBLE PARKING STALLS. SLOPES EXCEEDING 2.0% WILL BE REPLACED AT THE CONTRACTOR'S EXPENSE.

REV	DATE	DESCRIPTION	DSN	DWN	CHK
0	09/04/24	INITIAL ISSUE	MJR	TDA	MJR

MATTHEW J. ROWE
ENGINEER
KS # 29241

1627 SUNFLOWER LANE
SALINA, KANSAS 67401
PH. (785) 823–3400
so@kveng.com | www.kveng.com

KAW VALLEY ENGINEERING

KAW VALLEY ENGINEERING, INC. IS AUTHORIZED TO OFFER ENGINEERING SERVICES IN KANSAS UNDER CERTIFICATE OF AUTHORIZATION # E–115.

ROOTS COFFEE COMPANY
YODER & RED ROCK ROAD
RENO COUNTY, KANSAS

CIVIL PLANS
GRADING & EROSION CONTROL PLAN

PROJ. NO.	E24D3817	
DESIGNER	MJR	DRAWN BY TDA
CFN	3817GP	
SHEET	02	REV 0

THIS DRAWING SHALL NOT BE UTILIZED BY ANY PERSON, FIRM, OR CORPORATION IN WHOLE OR IN PART WITHOUT THE SPECIFIC PERMISSION OF KAW VALLEY ENGINEERING, INC.

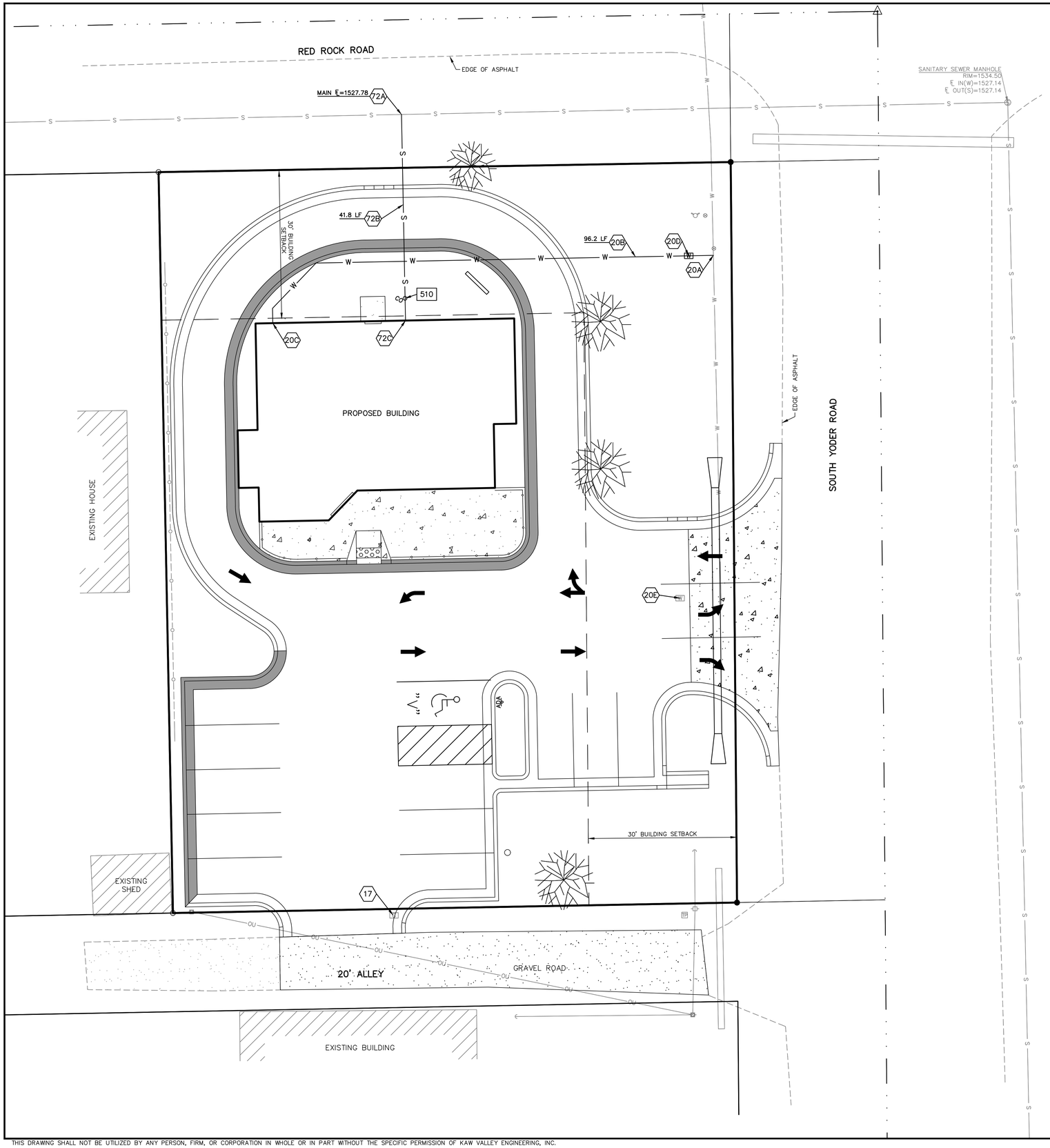

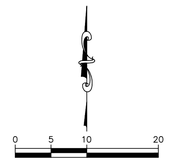

DETAILS – SEE DETAIL SHEET NO. 05 FOR THE FOLLOWING DETAILS

206 TRENCH AND BEDDING DETAILS
510 CLEAN–OUT

NOTES:

17 CONTRACTOR TO VERIFY EXISTING GAS METER HAS BEEN REMOVED PRIOR TO CONSTRUCTION. NOTIFY ENGINEER OF ANY CONFLICTS.

20A CONNECT PROPOSED DOMESTIC WATER SERVICE LINE TO EXISTING WATER MAIN USING TAPPING SLEEVE AND VALVE. CONTRACTOR TO COORDINATE TAP WITH RENO COUNTY.

20B PVC WATER SERVICE LINE. REFER TO MEP PLANS FOR SIZE (MINIMUM BURIAL DEPTH 42")

20C POINT OF CONNECTION TO BUILDING – WATER SERVICE (SEE MEP PLANS)

20D WATER METER AND PIT. CONTRACTOR TO COORDINATE TAP AND METER WITH THE CITY AND COUNTY CONTRACTOR IS TO INCUR ANY AND ALL COSTS ASSOCIATED WITH WATER METER AND TAP.

20E EXISTING WATER METER TO BE REMOVED PER CITY AND COUNTY SPECIFICATIONS

72A POINT OF CONNECTION – SANITARY SEWER SERVICE (SEE DETAIL SHEET 05)

72B 4" SANITARY SEWER SERVICE LINE, PVC SDR 26 AT MINIMUM 2% SLOPE

72C POINT OF CONNECTION TO BUILDING – SANITARY SEWER SERVICE (SEE MEP PLANS)

NOTE:
1. CONTRACTOR SHALL REFER TO ARCHITECTURAL PLANS FOR EXACT LOCATIONS AND DIMENSIONS OF ENTRANCE, SLOPED PAVING, EXIT PORCHES, RAMPS, TRUCK DOCKS, PRECISE BUILDING DIMENSIONS AND EXACT BUILDING UTILITY ENTRANCE LOCATIONS.

2. THESE PLANS HAVE NOT BEEN VERIFIED WITH FINAL ARCHITECTURAL CONTRACT DRAWINGS. CONTRACTOR SHALL VERIFY AND NOTIFY THE ENGINEER OF ANY DISCREPANCIES. CONTRACTOR IS FULLY RESPONSIBLE FOR REVIEW AND COORDINATION OF ALL DRAWINGS AND CONTRACTOR DOCUMENTS.

UTILITY NOTES:

1. CONSTRUCTION SHALL NOT START ON ANY PUBLIC WATER OR SANITARY SEWER SYSTEM UNTIL WRITTEN APPROVAL OR PERMITS HAVE BEEN RECEIVED FROM THE OWNER.

2. ALL UTILITY AND STORM SEWER TRENCHES CONSTRUCTED UNDER AREAS THAT RECEIVE PAVING SHALL BE BACKFILLED TO 18 INCHES ABOVE THE TOP OF THE PIPE WITH SELECT GRANULAR MATERIAL PLACED ON EIGHT–INCH LIFTS, AND COMPACTED TO 95% MODIFIED PROCTOR DENSITY.

3. CONTRACTOR SHALL NOT OPEN, TURN OFF, INTERFERE WITH, OR ATTACH ANY PIPE OR HOSE TO OR TAP ANY WATER MAIN BELONGING TO THE CITY UNLESS DULY AUTHORIZED TO DO SO BY THE CITY. ANY ADVERSE CONSEQUENCE OF ANY SCHEDULED OR UNSCHEDULED DISRUPTIONS OF SERVICE TO THE PUBLIC ARE TO BE THE LIABILITY OF THE CONTRACTOR. KAW VALLEY ENGINEERING AND OWNER ARE TO BE HELD HARMLESS.

4. DISINFECTION AND PRESSURE TESTING OF WATER LINES SHALL BE PERFORMED AND PAID FOR BY THE CONTRACTOR UNDER SUPERVISION OF A REPRESENTATIVE OF THE CITY WATER DEPARTMENT. CONTRACTOR SHALL NOTIFY THE CITY OF YODER WATER DEPARTMENT 24 HOURS MINIMUM, PRIOR TO ANY TESTING.

5. ALL WATER AND SANITARY SEWER SYSTEMS THAT ARE TO BE PUBLIC LINES SHALL BE CONSTRUCTED IN ACCORDANCE WITH SPECIFICATIONS PREVIOUSLY APPROVED BY THE CITY OF YODER AND THE KANSAS DEPARTMENT OF HEALTH AND ENVIRONMENT AND SHALL BE INSPECTED BY THE CITY. IT IS THE CONTRACTOR'S RESPONSIBILITY TO ASSURE THAT THIS INSPECTION OCCURS.

6. LOCATIONS SHOWN FOR PROPOSED WATER LINES ARE APPROXIMATE. VARIATIONS MAY BE MADE, WITH APPROVAL OF THE ENGINEER, TO AVOID CONFLICTS.

7. CONTRACTOR TO INSTALL TRACING WIRE ALONG ALL NON–METALLIC WATER MAINS AND SERVICE LINES PER SPECIFICATIONS.

8. CONTRACTOR SHALL EXPOSE EXISTING UTILITIES AT LOCATIONS OF POSSIBLE CONFLICT AND POINTS OF CONNECTION PRIOR TO ANY CONSTRUCTION OF NEW UTILITIES.

9. WATER LINES SHALL HAVE A MINIMUM COVER OF 42 INCHES. ALL VALVES ON MAINS AND FIRE HYDRANT LEADS SHALL BE WITH VALVE BOX ASSEMBLIES. THE SIZE OF VALVE BOX ASSEMBLY TO BE INSTALLED IS DETERMINED BY THE TYPE AND SIZE OF VALVE. VALVE BOX CAPS SHALL HAVE THE WORD "WATER".

10. A MINIMUM HORIZONTAL DISTANCE OF 10 FEET SHALL BE MAINTAINED BETWEEN PARALLEL WATER (MAINS AND SERVICE) AND GRAVITY SANITARY SEWER (MAINS AND SERVICE) LINES. WHEN IT IS NECESSARY FOR ANY WATER LINE TO CROSS A GRAVITY SANITARY SEWER LINE, THE SEWER LINE SHALL BE ENCASED IN CONCRETE OR CONSTRUCTED OF DUCTILE IRON PIPE OR PVC PIPE WITH NO JOINTS WITHIN 10 FEET OF THE CROSSING UNLESS THE WATER LINE IS AT LEAST 2 FEET CLEAR DISTANCE ABOVE THE GRAVITY SANITARY SEWER LINE. WHERE A WATER LINE (SERVICE LINE) CROSSES A NEW (EXISTING) FORCE MAIN (FORCE SERVICE LINE), THE WATER LINE (SERVICE LINE) MUST ALWAYS CROSS OVER THE FORCE MAIN (FORCE SERVICE LINE) WITH A MINIMUM VERTICAL SEPARATION DISTANCE OF 2 FEET. FORCE SEWER LINE (FORCE SERVICE LINE) JOINTS ARE TO BE LOCATED AS FAR AS POSSIBLE FROM THE INTERSECTED WATER LINE.

11. CONTRACTOR IS RESPONSIBLE FOR ALL FEES/COSTS ASSOCIATED WITH THE ELECTRIC, WATER, AND SANITARY SEWER LINES.

UNDERGROUND UTILITY STATEMENT:

THE UNDERGROUND UTILITIES SHOWN HEREON ARE DEPICTED FROM FIELD SURVEY INFORMATION OF ONE–CALL LOCATED UTILITIES AND/OR THE SCALING AND PLOTTING OF EXISTING UTILITY MAPS AND DRAWINGS MADE AVAILABLE TO THE SURVEYOR AT THE TIME OF SURVEY. THE SURVEYOR DOES NOT CERTIFY THAT THE UNDERGROUND UTILITIES SHOWN COMPRISE ALL UNDERGROUND UTILITIES IN THE AREA, EITHER IN SERVICE OR ABANDONED. FURTHERMORE, THE SURVEYOR DOES NOT CERTIFY THAT THE UNDERGROUND UTILITIES SHOWN ARE IN THE EXACT LOCATION DEPICTED ALTHOUGH THE SURVEYOR DOES CERTIFY THAT THEY ARE DEPICTED AS ACCURATELY AS POSSIBLE FROM INFORMATION MADE AVAILABLE TO THE SURVEYOR AT THE TIME OF SURVEY. THE SURVEYOR HAS NOT PHYSICALLY LOCATED THE UNDERGROUND UTILITIES SHOWN HEREON BY EXCAVATION UNLESS OTHERWISE NOTED ON THIS SURVEY.

SAFETY NOTICE TO CONTRACTOR

IN ACCORDANCE WITH GENERALLY ACCEPTED CONSTRUCTION PRACTICES, THE CONTRACTOR SHALL BE SOLELY AND COMPLETELY RESPONSIBLE FOR CONDITIONS OF THE JOB SITE, INCLUDING SAFETY OF ALL PERSONS AND PROPERTY DURING PERFORMANCE OF THE WORK. THIS REQUIREMENT WILL APPLY CONTINUOUSLY AND NOT BE LIMITED TO NORMAL WORKING HOURS.

WARRANTY / DISCLAIMER

THE DESIGNS REPRESENTED IN THESE PLANS ARE IN ACCORDANCE WITH ESTABLISHED PRACTICES OF CIVIL ENGINEERING FOR THE DESIGN FUNCTIONS AND USES INTENDED BY THE OWNER AT THIS TIME. HOWEVER, NEITHER KAW VALLEY ENGINEERING, INC NOR ITS PERSONNEL, CAN OR DO WARRANT THESE DESIGNS OR PLANS AS CONSTRUCTED, EXCEPT IN THE SPECIFIC CASES WHERE KAW VALLEY ENGINEERING PERSONNEL INSPECT AND CONTROL THE PHYSICAL CONSTRUCTION ON A CONTEMPORARY BASIS AT THE SITE.

CAUTION – NOTICE TO CONTRACTOR

THE CONTRACTOR IS SPECIFICALLY CAUTIONED THAT THE LOCATION AND/OR ELEVATION OF EXISTING UTILITIES AS SHOWN ON THESE PLANS IS BASED ON RECORDS OF THE VARIOUS UTILITY COMPANIES AND, WHERE POSSIBLE, MEASUREMENTS TAKEN IN THE FIELD. THE INFORMATION IS NOT TO BE RELIED ON AS BEING EXACT OR COMPLETE. THE CONTRACTOR SHALL CALL THE APPROPRIATE UTILITY COMPANY AT LEAST 72 HOURS BEFORE ANY EXCAVATION TO REQUEST EXACT FIELD LOCATION OF UTILITIES. IT SHALL BE THE RESPONSIBILITY OF THE CONTRACTOR TO RELOCATE ALL EXISTING UTILITIES WHICH CONFLICT WITH PROPOSED IMPROVEMENTS SHOWN ON THE PLANS.
THE CONTRACTOR SHALL EXPOSE EXISTING UTILITIES AT LOCATIONS OF POSSIBLE CONFLICTS PRIOR TO ANY CONSTRUCTION.

REV	DATE	DESCRIPTION	DSN	DWN	CHK
0	09/04/24	INITIAL ISSUE	MJR	TDA	MJR

MATTHEW J. ROWE
ENGINEER
KS # 29241

KAW VALLEY ENGINEERING
1627 SUNFLOWER LANE
SAUNA, KANSAS 67401
PH. (785) 823–3400
so@kveng.com | www.kveng.com
KAW VALLEY ENGINEERING, INC. IS AUTHORIZED TO OFFER ENGINEERING SERVICES BY KANSAS STATE CERTIFICATE OF AUTHORIZATION # E–115.
EXPIRES 12/31/24

ROOTS COFFEE COMPANY
YODER & RED ROCK ROAD
RENO COUNTY, KANSAS

CIVIL PLANS
UTILITY PLAN

PROJ. NO.	E24D3817	
DESIGNER	MJR	DRAWN BY TDA
CFN	3817UP	
SHEET	03	REV 0

THIS DRAWING SHALL NOT BE UTILIZED BY ANY PERSON, FIRM, OR CORPORATION IN WHOLE OR IN PART WITHOUT THE SPECIFIC PERMISSION OF KAW VALLEY ENGINEERING, INC.

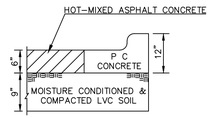

REGULAR DUTY ASPHALT 041

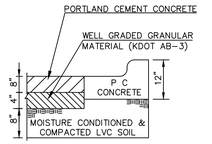

REGULAR DUTY CONCRETE 040

1. FLEXIBLE PAVEMENT SHALL BE IN ACCORDANCE WITH THE LATEST EDITION OF THE KANSAS DEPARTMENT OF TRANSPORTATION STANDARD SPECIFICATIONS FOR STATE ROAD & BRIDGE CONSTRUCTION.

   HOT-MIXED ASPHALT CONCRETE
   – KDOT HMA COMMERCIAL GRADE (CLASS A)

2. PORTLAND CEMENT CONCRETE SHALL HAVE A MINIMUM COMPRESSIVE STRENGTH OF 4000 PSI AT 28 DAYS WITH 6% ENTRAINED AIR ±2% AND SHALL MEET OR EXCEED THE SPECIFICATIONS SET FORTH IN THE LATEST EDITION OF THE KANSAS DEPARTMENT OF TRANSPORTATION STANDARD SPECIFICATIONS FOR STATE ROAD & BRIDGE CONSTRUCTION.

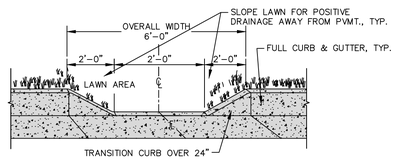

CURB CUT 413

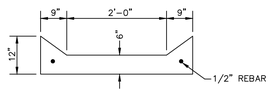

CONCRETE DRAINAGE FLUME 416

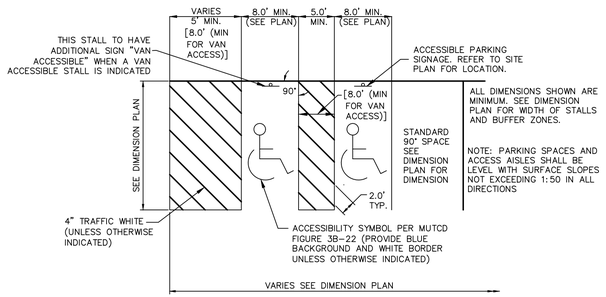

90° SPACE STRIPING

ACCESSIBLE STRIPING 102

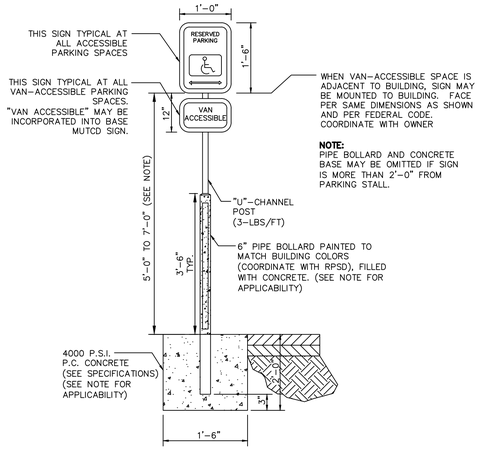

ACCESSIBLE PARKING SIGN 120

HEIGHT ABOVE GRADE FOR POLE MOUNTED SIGNS VARIES. TYPICAL INSTALLATION IS 5'-0" ABOVE GRADE. SIGN SHALL BE MOUNTED AT 7'-0" IF IT FALLS WITHIN A WALKING PATH.

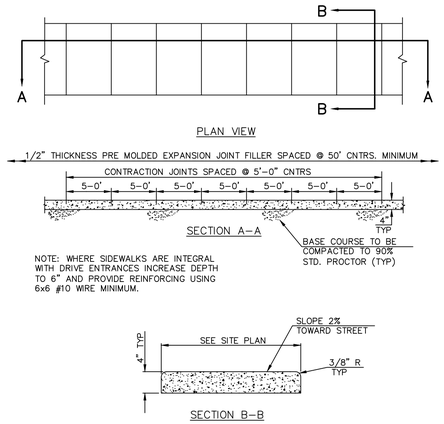

CONCRETE SIDEWALK 055

NOTE: CONCRETE SHALL BE CLASS A WITH f'c = 3000 PSI.

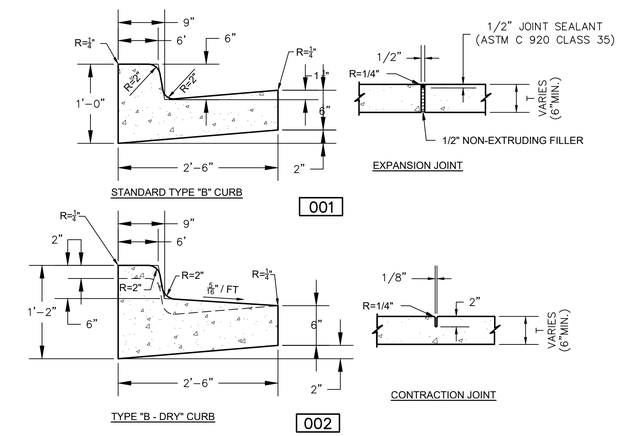

NOTES:
1. IN TRANSITIONS, WATER SHALL FLOW FROM THE GUTTER OF TYPE "B" CURB TO THE LIP OF TYPE "B – DRY" CURB AT 0.5% MIN. SLOPE.
2. GUTTER SLOPE IN HANDICAP ACCESSIBLE STALLS AND ACCESS AISLES SHALL NOT EXCEED 2.0%.

TYPE "B" CURB & GUTTER NOTES:
1. ½" PREMOLDED EXPANSION JOINTS SHALL BE PLACED AT POINTS OF CURVATURE, CURB RETURNS, CURB INLETS AND AT 250' CENTERS. THE EXPANSION JOINTS SHALL BE DOWELED IN ACCORDANCE WITH THE SPECIFICATIONS. CONTRACTION JOINTS SHALL BE 2" DEEP AND PLACED AT 15' INTERVALS EQUALLY SPACED BETWEEN EXPANSION JOINTS.
2. PORTLAND CEMENT CONCRETE SHALL HAVE A MINIMUM COMPRESSIVE STRENGTH OF 4000 PSI AT 28 DAYS WITH 6% ENTRAINED AIR ±2% AND SHALL MEET OR EXCEED THE KANSAS DEPARTMENT OF TRANSPORTATION SPECIFICATIONS.
3. SEE SIDEWALK RAMP DETAILS FOR TYPICAL SIDEWALK RAMP CURB & GUTTER SECTIONS.
4. DETAILS AS SHOWN FOR CONCRETE AND ASPHALT PAVING. WHEN USED WITH CONCRETE PAVING POURED MONOLITHICALLY WITH CURB NO MODIFICATIONS ARE REQUIRED. WHEN CURB AND CONCRETE PAVING ARE TO BE POURED SEPARATELY #4 BARS, 24" LONG ARE TO BE PROVIDED TO TIE CURB TOGETHER WITH CONCRETE PAVING.
5. ALL REINFORCING SHALL BE 60 ksi EPOXY COATED DEFORMED BARS.
6. CURBS TO BE CONSTRUCTED ON MINIMUM 6 INCHES OF COMPACTED WELL GRADED BASE ROCK.

CONCRETE CURB

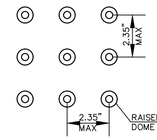

DETECTABLE WARNING SURFACE PATTERN

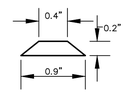

RAISED TRUNCATED DOME DETAIL

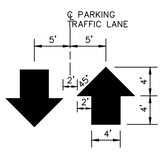

TRAFFIC FLOW ARROW 104

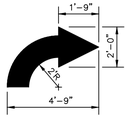

TRAFFIC FLOW ARROW 105

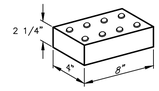

PAVER BRICK WITH TRUNCATED DOME SURFACE

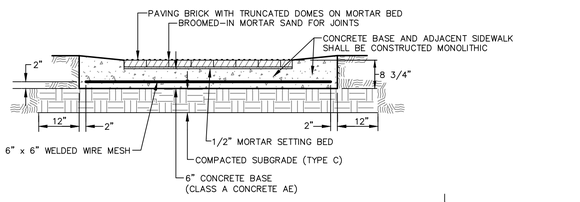

SECTION A–A

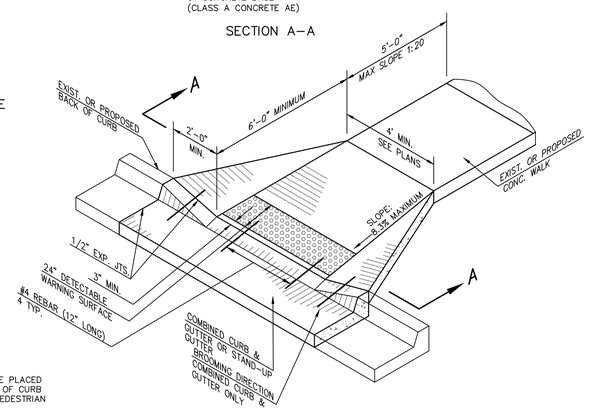

NOTE:
DETECTABLE WARNING SURFACE TO BE PLACED A MINIMUM OF 3 INCHES FROM BACK OF CURB AND ALIGNED IN THE DIRECTION OF PEDESTRIAN TRAVEL.

ISOMETRIC OF RAMP WITH PERPENDICULAR WALK SHOWN

SIDEWALK RAMPS 060

REV	DATE	DESCRIPTION	DSN	DWN	CHK
0	09/04/24	INITIAL ISSUE	MJR	TDA	MJR

MATTHEW J. ROWE
ENGINEER
KS # 29241

KAW VALLEY ENGINEERING
1627 SUNFLOWER LANE
SALINA, KANSAS 67401
PH. (785) 823-3400
sot@kveng.com | www.kveng.com
KAW VALLEY ENGINEERING, INC. IS AUTHORIZED TO OFFER ENGINEERING SERVICES IN KANSAS UNDER STATE CERTIFICATE OF AUTHORIZATION # E-11.5. EXPIRES 12/31/24.

ROOTS COFFEE COMPANY
YODER & RED ROCK ROAD
RENO COUNTY, KANSAS

CIVIL PLANS
DETAIL SHEET

PROJ. NO.	
E24D3817	
DESIGNER	DRAWN BY
MJR	TDA
CFN	
3817TYP	
SHEET	REV
04	0

THIS DRAWING SHALL NOT BE UTILIZED BY ANY PERSON, FIRM, OR CORPORATION IN WHOLE OR IN PART WITHOUT THE SPECIFIC PERMISSION OF KAW VALLEY ENGINEERING, INC.

EROSION CONTROL NOTES:

1. PROPERTY LINE IS LIMITS OF CONSTRUCTION EXCEPT AS SHOWN.
2. THE CONTRACTOR SHALL INSTALL EROSION CONTROL MEASURES AS SHOWN ON THE DRAWINGS PRIOR TO BEGINNING EARTHWORK OPERATIONS.
3. THE CONTRACTOR SHALL MAINTAIN ALL SILT CONTROL MEASURES DURING CONSTRUCTION.
4. ALL SILT SHALL REMAIN ON SITE AND SURROUNDING STREETS SHALL BE KEPT CLEAR OF ALL MUD AND DEBRIS.
5. A SEDIMENTATION BARRIER IS TO BE INSTALLED AS SHOWN.
6. ACCUMULATED SEDIMENT SHALL BE REMOVED AND THE SEDIMENTATION BARRIERS MAINTAINED AS NEEDED TO PREVENT SEDIMENTATION BYPASS OF THE BARRIER.
7. SLOPES ARE TO BE LEFT IN A ROUGH CONDITION DURING GRADING.
8. CURB INLET SEDIMENTATION BARRIERS ARE TO BE INSTALLED AROUND INLETS AND WEIRS WHERE SEDIMENTATION IS A CONCERN. INLET BARRIERS SHALL BE EITHER BLOCK AND GRAVEL, OR SECURED STRAW BALES, OR SILT FENCE.
9. SEDIMENT IS TO BE REMOVED FROM STORM WATER DRAINAGE SYSTEMS.
10. RIPRAP IS TO BE INSTALLED AT AREAS OF CONCENTRATED FLOW (I.E. CULVERT OUTLETS).
11. CONTRACTOR IS RESPONSIBLE FOR INSTALLING ANY ADDITIONAL EROSION CONTROL AS HE/SHE DEEMS NECESSARY.
12. THE CONTRACTOR SHALL PROVIDE ALL MATERIALS, TOOLS, EQUIPMENT AND LABOR AS NECESSARY TO INSTALL AND MAINTAIN ADEQUATE EROSION AND SILTATION CONTROLS REQUIRED TO PREVENT SOIL EROSION FROM LEAVING THE PROJECT SITE. IT SHALL BE THE CONTRACTOR'S SOLE RESPONSIBILITY TO ENSURE THAT METHODS UTILIZED ARE ADEQUATE AND COMPLY WITH REQUIREMENTS OF THE SPECIFICATIONS AND GOVERNMENTAL AGENCIES HAVING JURISDICTION OVER THE WORK.
13. TEMPORARY SEDIMENT FENCE/STRAW BALES TO REMAIN UNTIL ADEQUATE VEGETATION IS ESTABLISHED.
14. MUD AND DEBRIS SHALL BE CLEANED UP AT THE CONCLUSION OF EACH WORKING DAY, OR AFTER EACH RAINFALL IF SILT IS PRESENT.
15. INSPECTION, MAINTENANCE AND REPAIR OF EROSION CONTROL DEVICES SHALL BE ON GOING THROUGHOUT THE LIFE OF BUILDING CONSTRUCTION TO KEEP THE DEVICES IN OPERABLE CONDITION AT ALL TIMES. ADDITIONAL MEASURES SHALL BE INSTALLED AS REQUIRED BY ACTUAL FIELD CONDITIONS AND/OR GOVERNING INSPECTION AGENCIES.
16. INSTALL CONSTRUCTION ENTRANCE AT ANY POINT WHERE TRAFFIC WILL BE ENTERING OR LEAVING THE SITE AND AS SHOWN ON PLANS.
17. AT COMPLETION OF SITE GRADING AND OTHER RELATED CONSTRUCTION ACTIVITIES, ALL DISTURBED AREAS WITHIN THE PROJECT SITE SHALL BE SEEDED USING MULCH OR EQUIVALENT STABILIZING BMP, SODDED, OR LANDSCAPED AS SHOWN ON THE LANDSCAPE PLAN WITHIN 14 DAYS.
18. TOPSOIL IS TO BE PLACED IN AREAS UNSUITABLE FOR VEGETATIVE GROWTH.
19. STRIP TOPSOIL PRIOR TO EXCAVATION, STOCKPILE AND SPREAD ONTO DISKED SUBGRADE (4" MIN) A THICKNESS OF 4 INCHES.
20. ROCK LINING (RIPRAP) SHALL BE DURABLE STONE CONTAINING A COMBINED TOTAL OF NOT MORE THAN 10 PERCENT OF EARTH, SAND, SHALE AND NON-DURABLE ROCK. AT LEAST 60 PERCENT OF THE MASS SHALL BE OF PIECES HAVING A MINIMUM WEIGHT OF 150 POUNDS OR MORE PER CUBIC FOOT.
21. THE CONTRACTOR SHALL HAVE THE RESPONSIBILITY FOR RESOLVING COMPLAINTS IN THE EVENT THAT COMPLAINTS OR DAMAGE CLAIMS ARE FILED DUE TO DAMAGES OCCURRING ADJACENT TO OR DOWNSTREAM FROM PROPERTY BY SEDIMENT RESULTING FROM EROSION ON THE PROJECT SITE.
22. GOOD HOUSEKEEPING PRACTICES SHALL BE MAINTAINED ON SITE TO KEEP SOLID WASTE FROM ENTRY INTO WATERS.
23. ALL FUELING FACILITIES PRESENT ON SITE SHALL ADHERE TO APPLICABLE FEDERAL AND STATE REQUIREMENTS CONCERNING UNDERGROUND STORAGE, ABOVE GROUND STORAGE AND DISPENSERS, INCLUDING SPILL PREVENTION, CONTROL AND COUNTER MEASURES.
24. RIGHT OF WAY TO BE STABILIZED AS REQUIRED BY APWA SECTION 2400.
25. EROSION CONTROL IS TO BE PLACED IN PHASING AS CONSTRUCTION PROGRESSES.
26. MINIMAL WASHING OF CONCRETE EQUIPMENT ALLOWED, CHUTE ETC. CONCRETE WASHOUT OF THE DRUM IS NOT ALLOWED. ANY PIT/WASHOUT AREA NEEDS TO BE MAINTAINED IN A NON-DISCHARGING MANNER AND ANY WASTE RESIDUE WILL NEED TO BE CLEANED OUT AND REMOVED AT THE END OF PROJECT.
27. EROSION CONTROL SEDIMENT FENCE TO BE INSTALLED 1'-0" BEHIND CURB & GUTTER UPON COMPLETION OF BACKFILL OF CURB IN ALL AREAS WHERE SLOPES FROM LOT DRAIN TOWARDS CURB. UPON COMPLETION OF FINAL GRADING THE TOES OF ALL EMBANKMENTS IN EXCESS OF TWO FEET IN HEIGHT WILL HAVE EROSION CONTROL SEDIMENT FENCE INSTALLED.

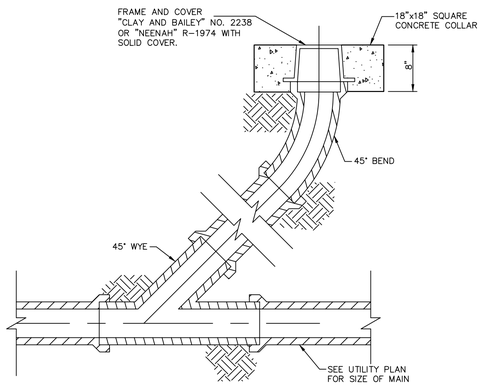

CLEAN-OUT 510

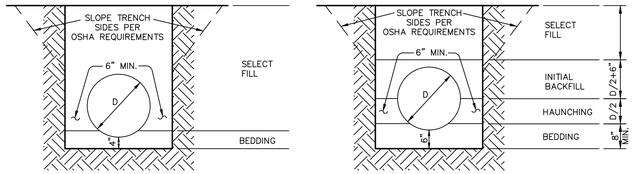

RIGID PIPE: INCLUDES REINFORCED CONCRETE, DUCTILE IRON, & CAST IRON

1. BEDDING SHALL BE COMPACTED SAND AND SHALL BE SHAPED TO THE BOTTOM OF THE PIPE.
2. SELECT FILL SHALL BE NATIVE MATERIAL FREE OF LARGE ROCKS, DEBRIS, AND ORGANICS (3"+) AND SHALL BE PLACED IN 8" MAX. LOOSE LIFTS AND COMPACTED IN ACCORDANCE WITH SPECIFICATIONS.

FLEXIBLE PIPE: INCLUDES CORRUGATED METAL PIPE. CORRUGATED POLYETHYLENE PIPE AND/OR POLYVINYL CHLORIDE PIPE.

1. BEDDING AND HAUNCHING MATERIAL SHALL BE COMPACTED SAND, UNLESS NOTED OTHERWISE ON PLANS AND SHALL BE SHAPED TO THE BOTTOM OF THE PIPE.
2. INITIAL BACKFILL MATERIAL SHALL BE GRANULAR MATERIAL OR SELECT MATERIAL (INCLUDING SAND) COMPACTED IN ACCORDANCE TO SPECIFICATIONS.
3. SELECT FILL PLACEMENT AND COMPACTION SAME AS FOR RIGID PIPE.

TRENCH AND BEDDING DETAILS 206

DATE	REVISIONS
5/17	2017 Standard Details
4/20	Sanitary-Water Crossing Detail

8/26/2020 – Added Sweep Tee Detail
5/6/2022 – Added Water Main Below
10/27/2023 – Revised Profile

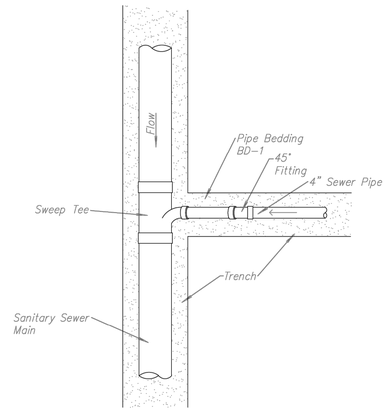

PLAN

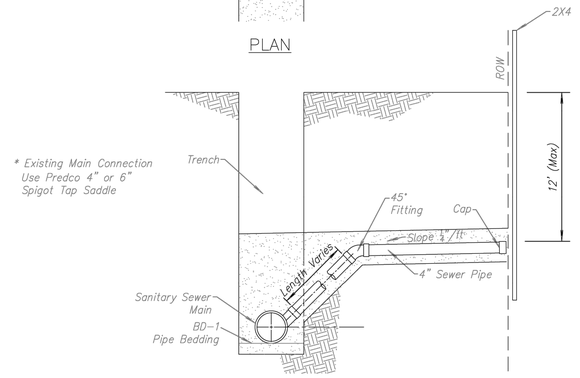

CROSS SECTION

SEWER CONNECTION
NEW CONSTRUCTION

CITY OF SALINA, KANSAS
PUBLIC WORKS – ENGINEERING – UTILITIES

STANDARD DETAILS
SANITARY SEWER

PROJ. NO. | DATE: 3-16-2017 | SHEET: 27
FILENAME: 27_Sanitary Sewer Mar1705_XPU.dwg | BY:

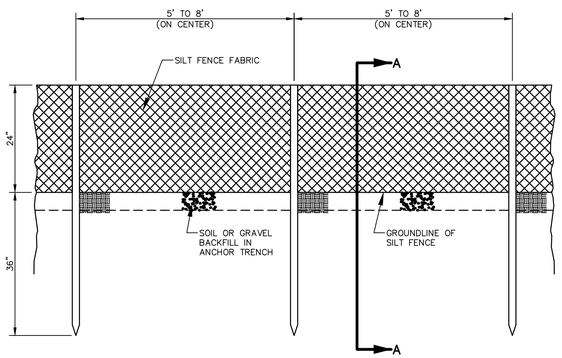

SEDIMENTATION FENCE 812

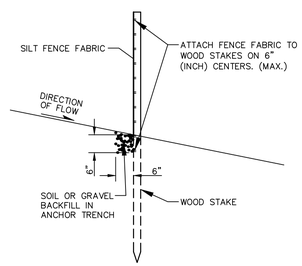

SECTION A–A

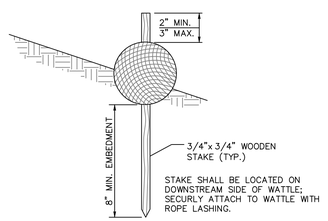

WATTLE NOTES:
1. FIBER LOGS MAY BE USED IN LIEU OF WATTLES.
2. THE DIAMETER OF WATTLE OR FIBER LOG SHALL BE AT LEAST 12-INCHES.
3. WATTLES OR FIBER LOGS MUST BE WRAPPED WITH NON-PLASTIC WRAPPING. COCONUT OR ASPEN FIBER SHALL BE USED FOR FIBER LOGS AND WATTLES.
4. THE WATTLES OR FIBER LOGS SHALL BE INSPECTED AFTER EVERY RAINFALL TO DETERMINE IF ANY PART OF THE BARRIER NEEDS TO BE REPAIRED OR REPLACED. IF IT IS DETERMINED THAT THE BARRIER NEEDS ANY REPAIR OR REPLACEMENT THIS SHALL BE DONE IMMEDIATELY.
5. SEDIMENT DEPOSITS SHALL BE REMOVED AFTER EACH RAINFALL OR BEFORE THEY ACCUMULATE TO 1/2 OF THE WATTLE OR FIBER LOG HEIGHT.
6. INSTALL WATTLES OR FIBER LOGS SNUGLY INTO THE TRENCH. ABUT ADJACENT WATTLES OR FIBER LOGS TIGHTLY, END TO END, WITHOUT OVERLAPPING THE ENDS.
7. STAKES SHALL BE INSTALLED AT EACH END OF WATTLE OR FIBER LOG, AND AT 4' O.C. ALONG ENTIRE LENGTH.
8. PROVIDE MULTIPLE WATTLES UPHILL FOR WATTLE DITCH CHECK CONFIGURATION OR AS NEEDED.
9. WATER FROM TRENCH DEWATERING TO BE PUMPED BEHIND COMPOST BERM OR WATTLE TO BE FILTERED.

WATTLE INSTALLATION 819
N.T.S.

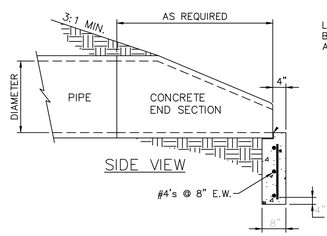

SIDE VIEW

TABLE

TOE WALL DEPTH	
PIPE DIAMETER	"B"
12" – 21"	24"
24" – 48"	30"
54" – 66"	36"

LAYER OF GROUT
BETWEEN END SECTION
AND TOE WALL.

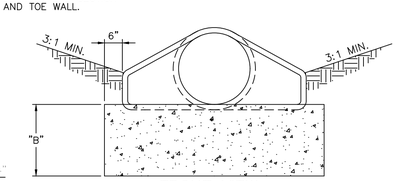

FRONT VIEW

NOTES:
1. THE DEPTH OF THE TOE WALL SHALL BE PER TABLE. IF BEDROCK IS ENCOUNTERED A MINIMUM OF 12" INTO BEDROCK IS REQUIRED.
2. ALL CONCRETE SHALL MEET APWA 2600 SPECIFICATIONS.

CONCRETE FLARED END SECTION
W/ TOE WALL 442

REV	DATE	DESCRIPTION	DSN	DWN	CHK
0	09/04/24	INITIAL ISSUE	MJR	TDA	MJR

MATTHEW J. ROWE
ENGINEER
KS # 29241

1627 SUNFLOWER LANE
SALINA, KANSAS 67401
PH. (785) 823-3400
sc@kveng.com | www.kveng.com

KAW VALLEY ENGINEERING

KAW VALLEY ENGINEERING, INC. IS AUTHORIZED TO OFFER ENGINEERING SERVICES IN KANSAS. STATE CERTIFICATE OF AUTHORIZATION # E-11.5. EXPIRES 12/31/24

ROOTS COFFEE COMPANY
YODER & RED ROCK ROAD
RENO COUNTY, KANSAS

CIVIL PLANS
DETAIL SHEET

PROJ. NO. E24D3817
DESIGNER MJR | DRAWN BY TDA
CFN 3817TYP
SHEET 05 | REV 0

THIS DRAWING SHALL NOT BE UTILIZED BY ANY PERSON, FIRM, OR CORPORATION IN WHOLE OR IN PART WITHOUT THE SPECIFIC PERMISSION OF KAW VALLEY ENGINEERING, INC.

EXISTING HOUSE

EXISTING SHED

6' PRIVACY FENCE

ONE WAY Drive–Thru

STOP FOR PEDESTRIANS

EXISTING BUILDING

ALLEY

12 STALLS

OPEN GUARD RAIL

OUTDOOR PATIO

OPEN GUARD RAIL

ROOTS COFFEE COMPANY

PRELIM F.F 1536.0'

MENU BD.

ADA

HITCHING POST

ONE WAY Drive–Thru

30' setback

30' setback

15'–0⅞"

56'–5⅜"

44'–5⅝"

79'–0½"

40'–2"

30'–9 15/16"

EAST RED ROCK ROAD

SOUTH YODER ROAD

North **A** **SITE PLAN**
1/8"=1'–0"

JonesGillamRenz
730 N. Ninth
Salina, KS 67401
785.827.0386
1881 Main Street, Suite 301
Kansas City, MO 64108
jgr@jgrarchitects.com

ROOTS COFFEE CO.

9805 S. YODER ROAD

YODER, KANSAS

JEFFREY S. GILLAM
LICENSED
6382
KANSAS
PROFESSIONAL ARCHITECT

REVISION:

DATE: 9–4–2024
JOB: 21–3168
SHEET NO.:

A1.1

COPYRIGHTED©

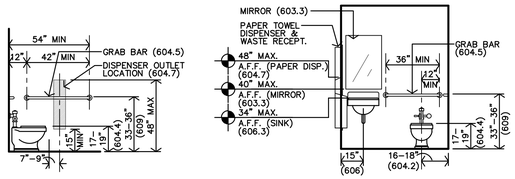

D TYP. HEIGHTS @ ACC. TOILET SIDE WALL

1/4"=1'-0" FOR ACCESSIBLE HEIGHTS & LOCATION ONLY

C TYP. HEIGHTS @ ACC. TOILET BACK WALL

1/4"=1'-0" FOR ACCESSIBLE HEIGHTS & LOCATION ONLY

PARTITION TYPES

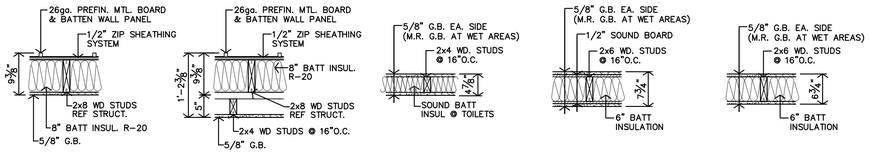

GENERAL NOTES

1. CONTRACTOR SHALL FIELD VERIFY ALL DIMENSIONS & CONDITIONS.
2. IF THERE IS A DISCREPANCY BETWEEN DRAWINGS AND FIELD CONDITIONS NOTIFY ARCHITECT PRIOR TO PROCEEDING WITH WORK SO THAT ANY ISSUES MAY BE CLARIFIED.
3. ALL WORK SHALL BE IN CONFORMANCE W/ APPLICABLE BUILDING CODES & ORDINANCES.
4. ALL NEW CONSTRUCTION SHALL BE IN CONFORMANCE TO ADA REQUIREMENTS. REFERENCE ADA FOR TYPICAL MINIMUM CLEARANCE REQ'D.
5. INSTALL MATERIALS AND/OR FINISHES AS INDICATED, IMPLIED OR AS REQUIRED FOR COMPLETE & FINISHED INSTALLATION.
6. ALL NEW DOOR HARDWARE SHALL BE LEVER TYPE LATCH SETS UNLESS NOTED OTHERWISE. COORDINATE W/ MFR. FOR ADA INSTALLATION REQUIREMENTS. COORDINATE KEYING REQUIREMENTS WITH OWNER.
7. DOORS ARE TYPICALLY LOCATED WITH HINGE-SIDE JAMB 4" FROM ADJACENT WALL UNLESS NOTED OTHERWISE OR REQUIRED TO MEET LATCH-SIDE CLEARANCE PER ADA.
8. DIMENSIONS TO NEW INTERIOR WALLS ARE TO THE FACE OF G.B. U.N.O.
9. FE – INDICATES NEW WALL MOUNTED FIRE EXTINGUISHER.
10. ALL FURNITURE & SHELVING SHOWN IS TO BE PROVIDED BY OWNER.
11. KITCHEN, BREW & ORDERING EQUIPMENT BY OTHERS.

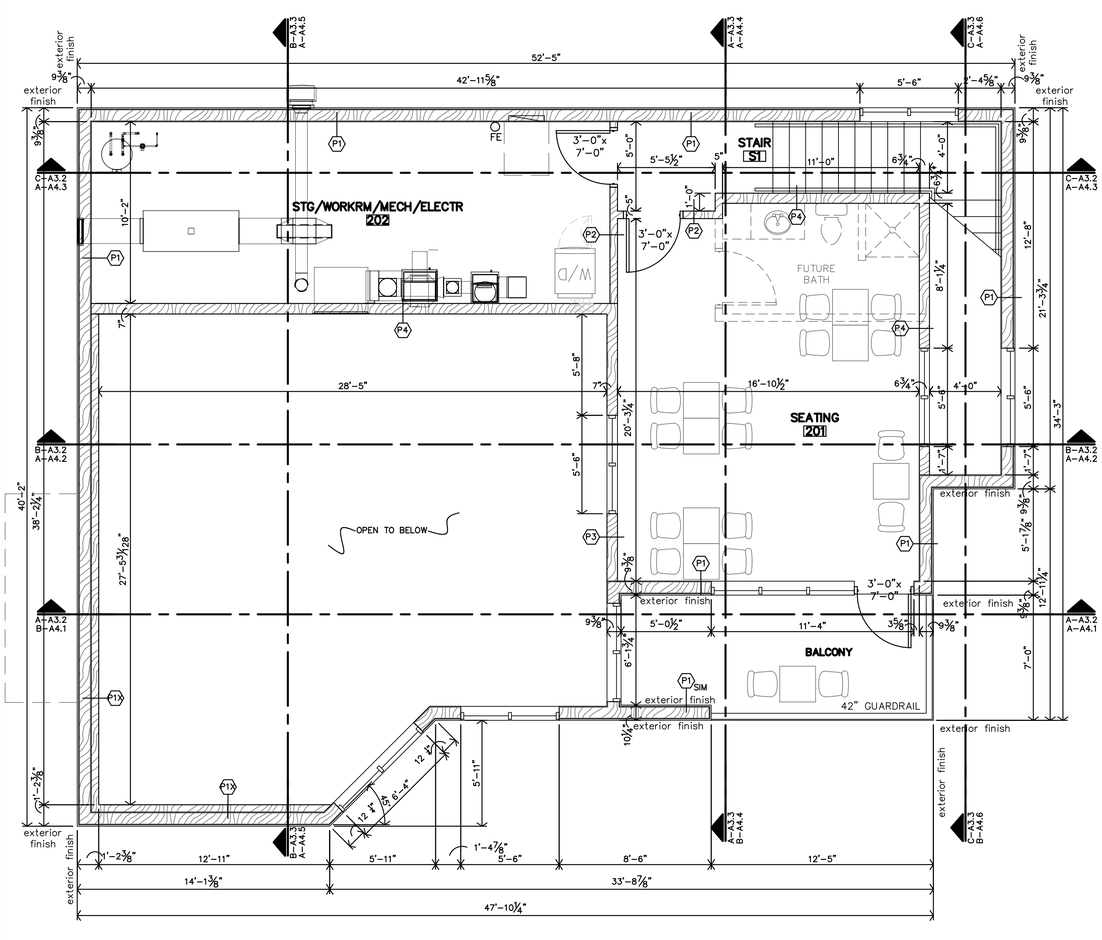

B SECOND FLOOR

1/4"=1'-0"

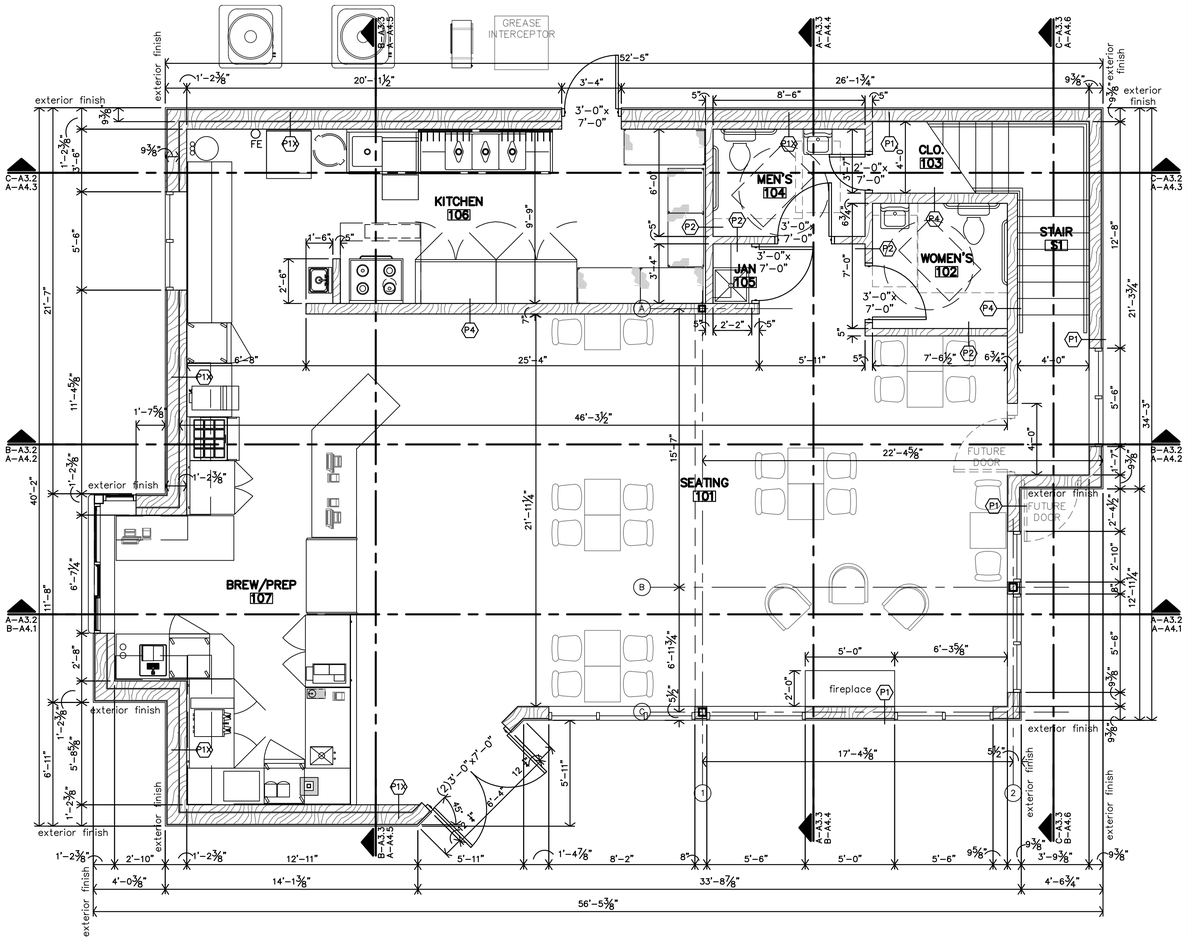

A FIRST FLOOR

1/4"=1'-0"

JonesGillamRenz
730 N. Ninth
1881 Main Street, Suite 301
Salina, KS 67401
Kansas City, MO 64108
785.827.0386
jgr@jgrarchitects.com

JGR

ROOTS COFFEE CO.

9805 S. YODER ROAD

YODER, KANSAS

JEFFREY S. GILLAM LICENSE 23821 KANSAS PROFESSIONAL ARCHITECT

REVISION:

DATE: 9-4-2024

JOB: 21-3168

SHEET NO.:

A2.1

COPYRIGHTED©

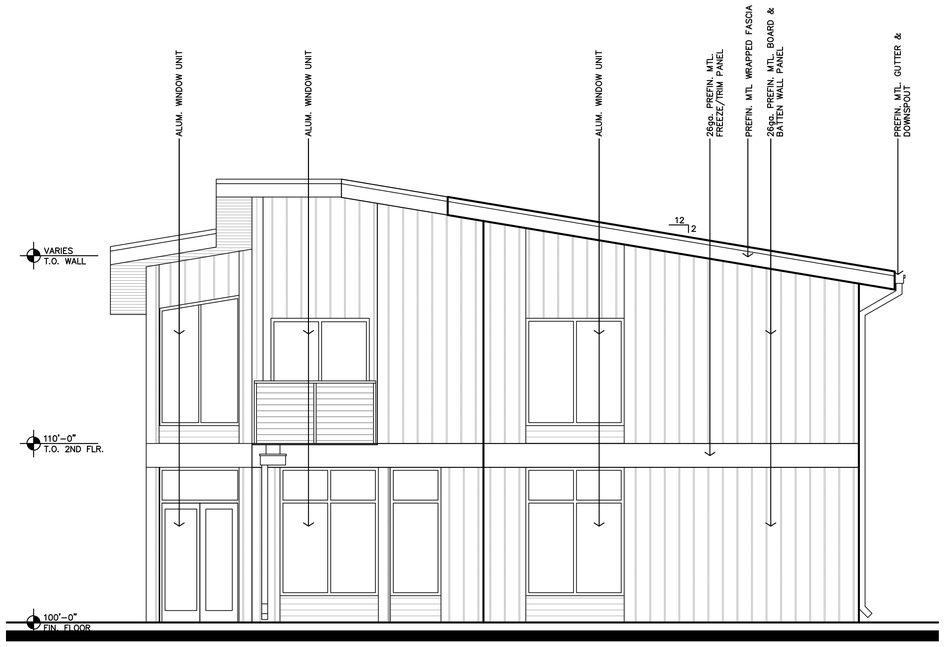

D **EAST ELEVATION**
1/4"=1'-0"

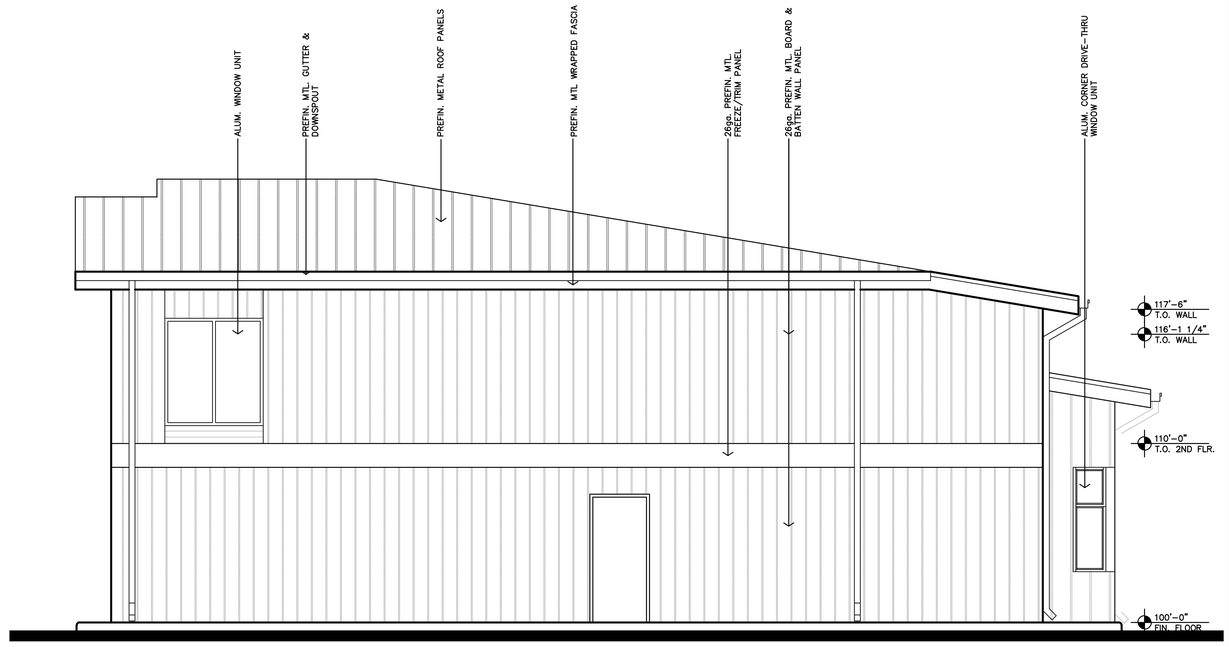

C **NORTH ELEVATION**
1/4"=1'-0"

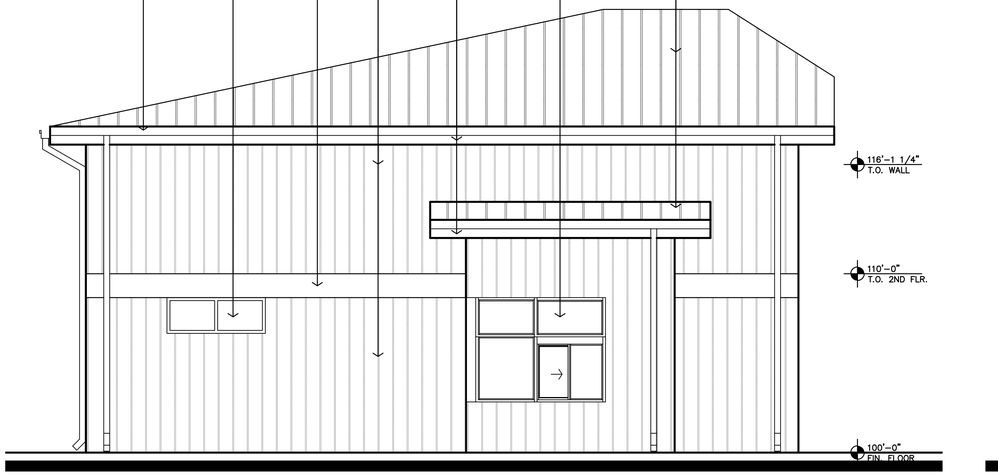

B **WEST ELEVATION**
1/4"=1'-0"

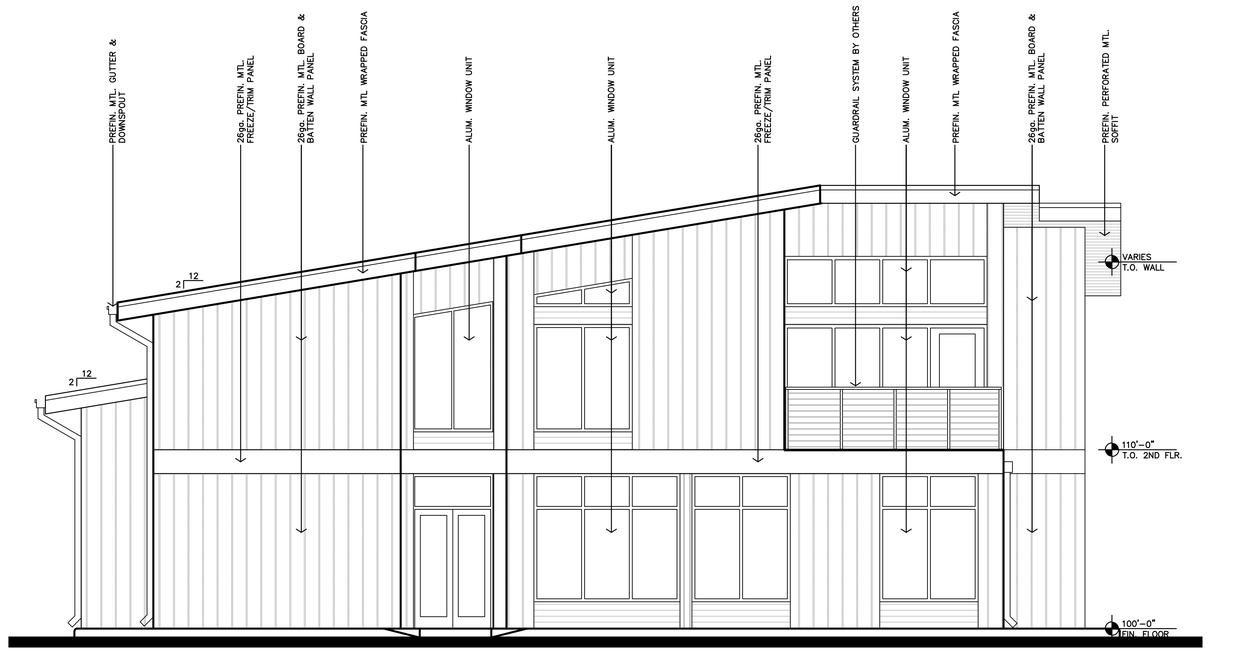

A **SOUTH ELEVATION**
1/4"=1'-0"

JonesGillamRenz
730 N. Ninth
Salina, KS 67401
785.827.0386
1881 Main Street, Suite 301
Kansas City, MO 64108
jgr@jgrarchitects.com

ROOTS COFFEE CO.

9805 S. YODER ROAD

YODER, KANSAS

JEFFREY S. GILLAM
LICENSED
4382
KANSAS
PROFESSIONAL ARCHITECT

REVISION:

DATE: 9-4-2024
JOB: 21-3168
SHEET NO.:

A3.1

COPYRIGHTED ©

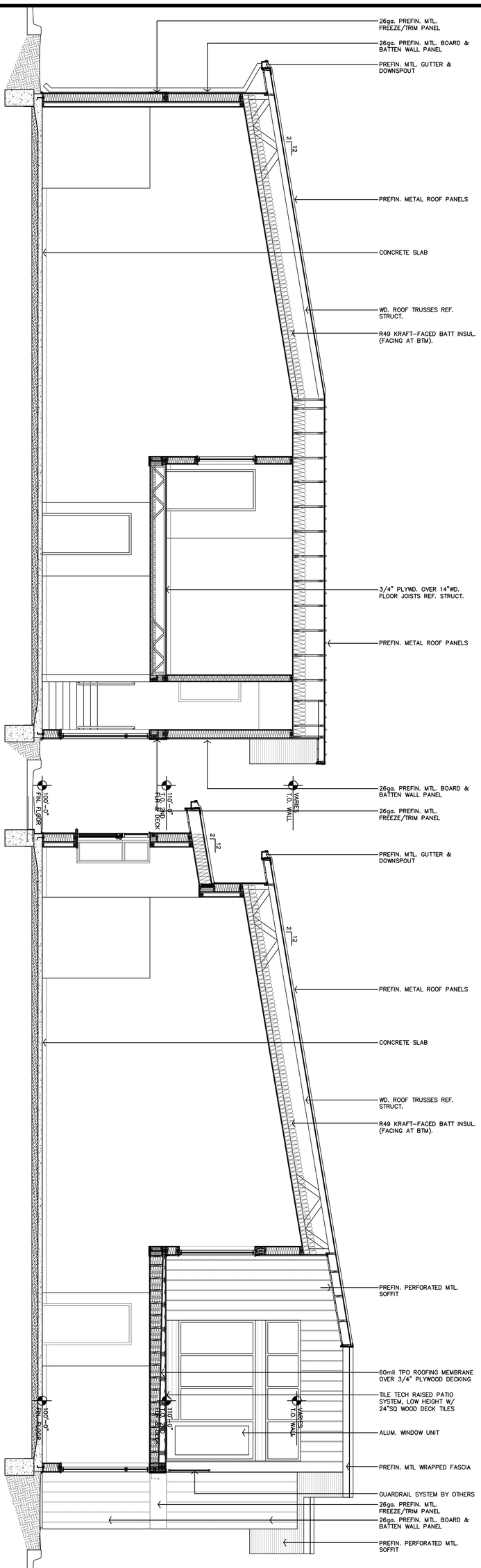

B BUILDING SECTION
1/4"=1'-0"

A BUILDING SECTION
1/4"=1'-0"

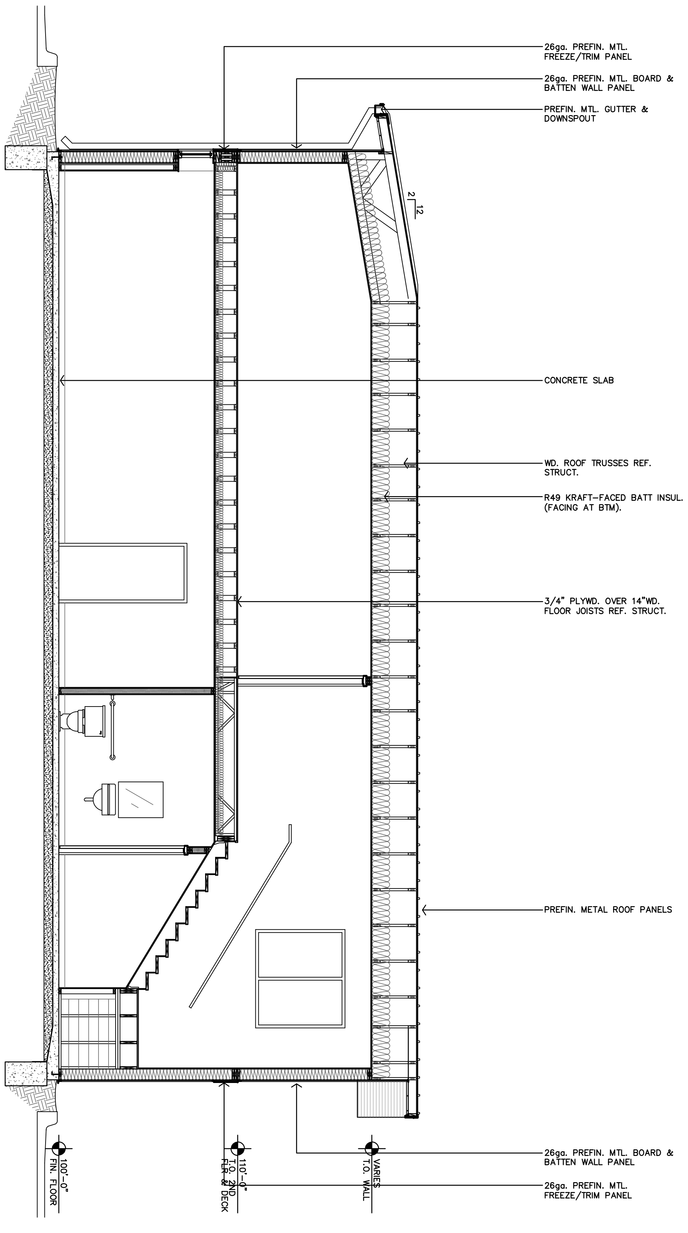

C BUILDING SECTION
1/4"=1'-0"

ROOTS COFFEE CO.

9805 S. YODER ROAD

YODER, **KANSAS**

JonesGillamRenz
730 N. Ninth
Salina, KS 67401
785.827.0386
1881 Main Street, Suite 301
Kansas City, MO 64108
jgr@jgrarchitects.com

A3.2

DATE: 9-4-2024
JOB:
SHEET NO.: 21-3168

REVISION:

COPYRIGHTED ©

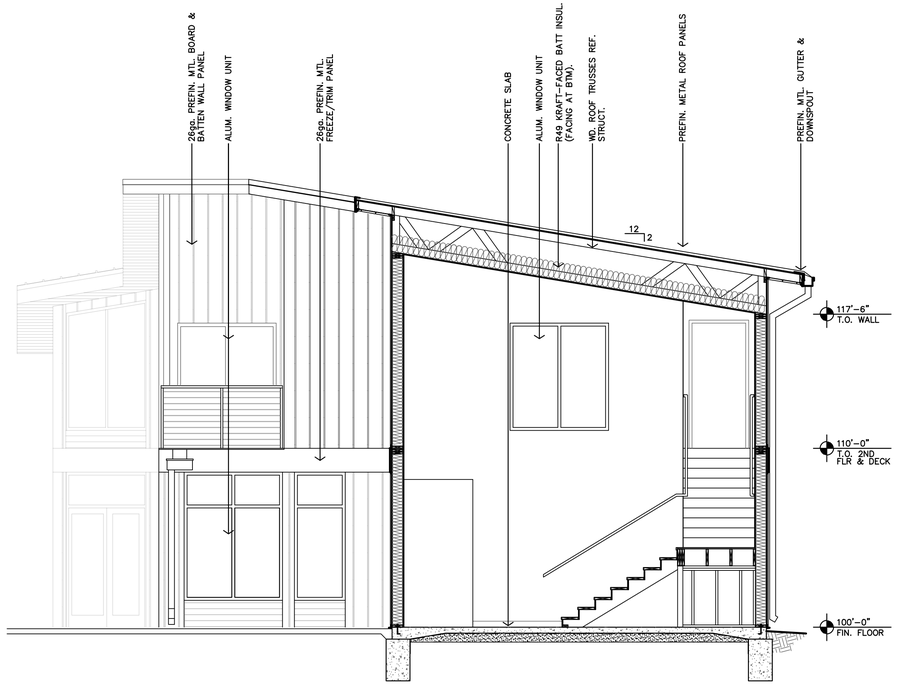

C **BUILDING SECTION**
1/4"=1'-0"

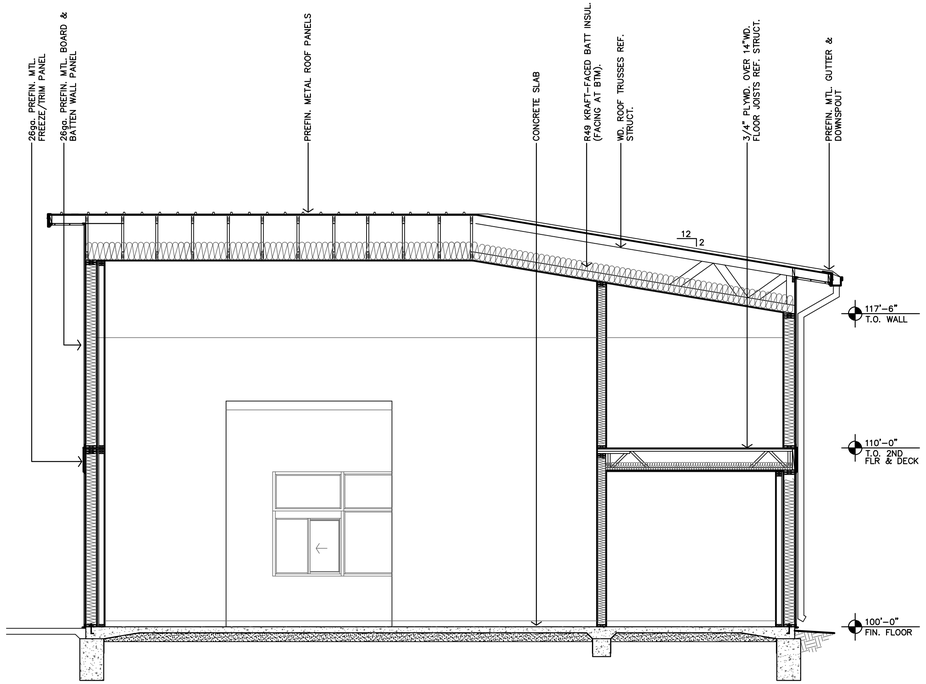

B **BUILDING SECTION**
1/4"=1'-0"

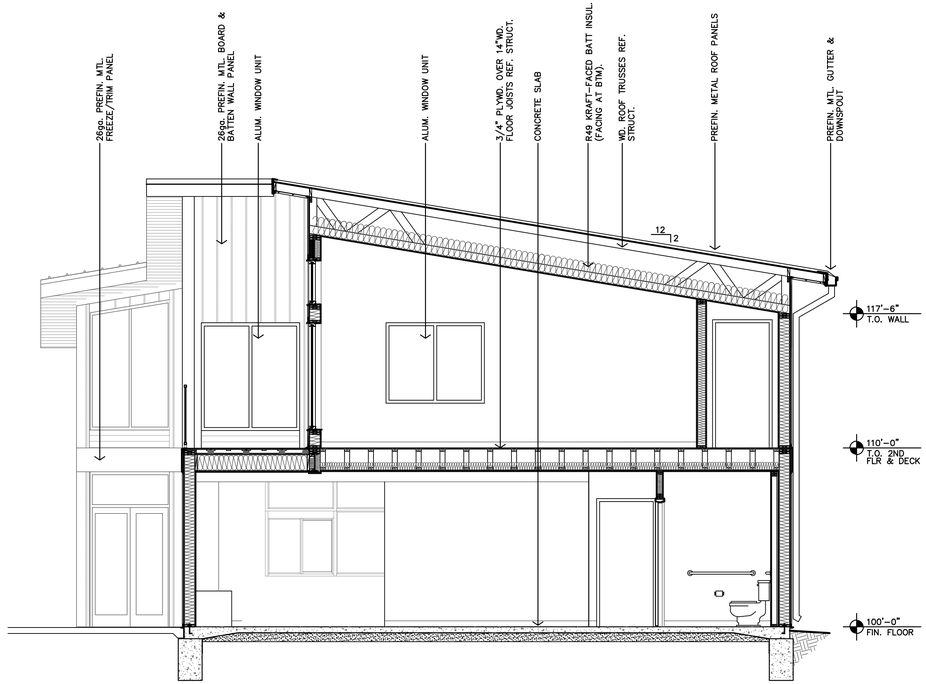

A **BUILDING SECTION**
1/4"=1'-0"

JonesGillamRenz
730 N. Ninth
Salina, KS 67401
785.827.0386
1881 Main Street, Suite 301
Kansas City, MO 64108
jgr@jgrarchitects.com

ROOTS COFFEE CO.

9805 S. YODER ROAD

YODER, KANSAS

JEFFREY S. GILLAM LICENSED 4382 KANSAS PROFESSIONAL ARCHITECT

REVISION:

DATE: 9-4-2024
JOB: 21-3168
SHEET NO.:

A3.3

COPYRIGHTED©

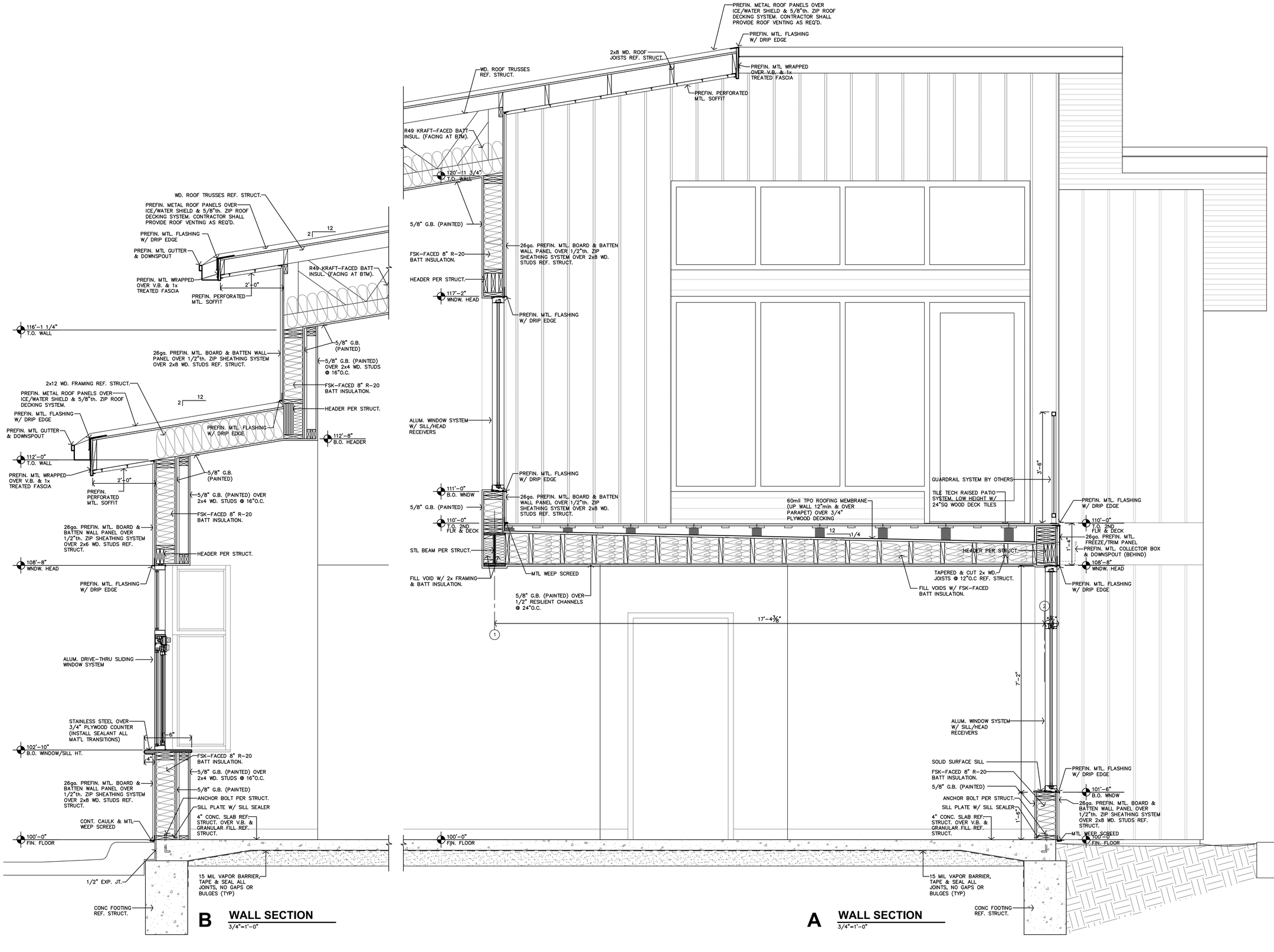

JonesGillamRenz
730 N. Ninth
Salina, KS 67401
1881 Main Street, Suite 301
Kansas City, MO 64108
785.827.0386
jgr@jgrarchitects.com

ROOTS COFFEE CO.

9805 S. YODER ROAD

YODER, KANSAS

JEFFREY S. GILLAM LICENSED 3382 KANSAS PROFESSIONAL ARCHITECT

REVISION:

DATE: 9-4-2024
JOB: 21-3168
SHEET NO.:

A4.1

COPYRIGHTED©

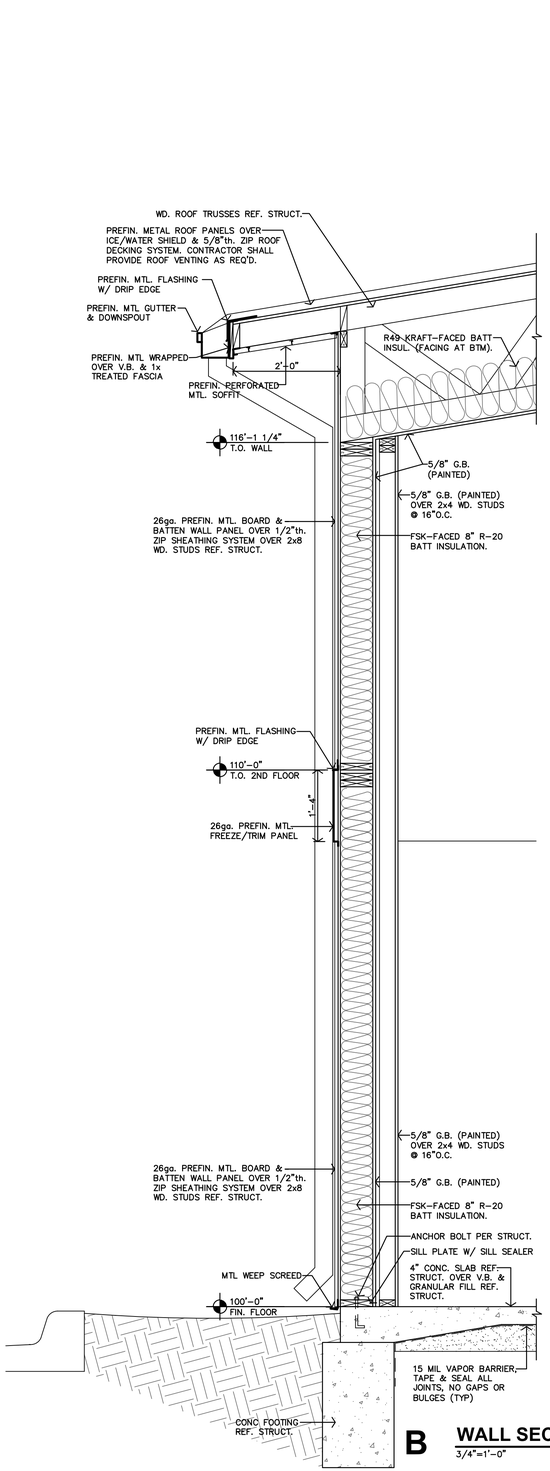

B **WALL SECTION**
3/4"=1'-0"

A **WALL SECTION**
3/4"=1'-0"

JonesGillamRenz
730 N. Ninth
Salina, KS 67401
785.827.0386
1881 Main Street, Suite 301
Kansas City, MO 64108
jgr@jgrarchitects.com

ROOTS COFFEE CO.

9805 S. YODER ROAD

YODER, KANSAS

JEFFREY S. GILLAM
LICENSED
6382
KANSAS
PROFESSIONAL ARCHITECT

REVISION:

DATE: 9-4-2024
JOB: 21-3168
SHEET NO.:

A4.2

COPYRIGHTED©

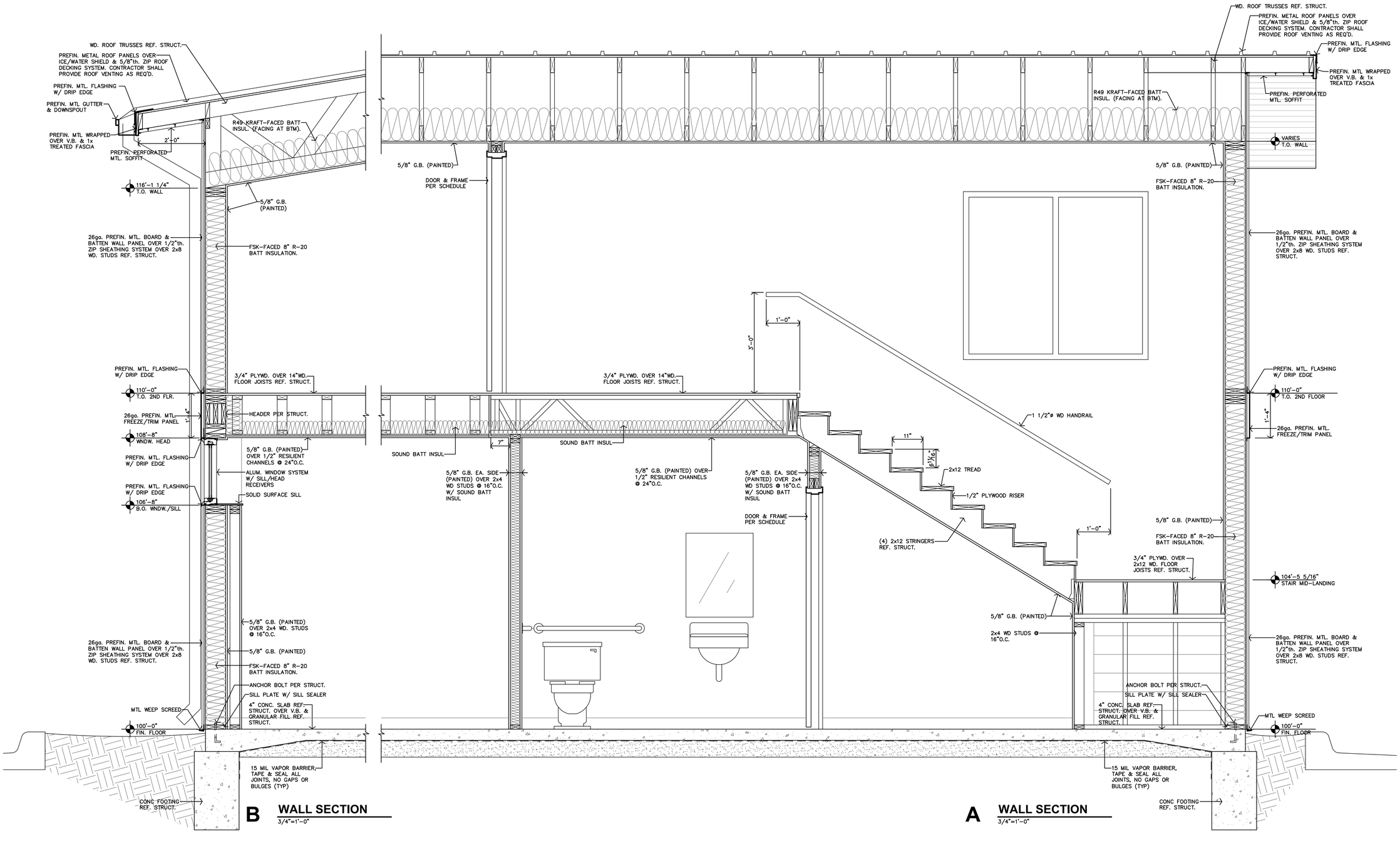

JonesGillamRenz
730 N. Ninth
Salina, KS 67401
785.827.0386
1881 Main Street, Suite 301
Kansas City, MO 64108
jgr@jgrarchitects.com

ROOTS COFFEE CO.

9805 S. YODER ROAD

YODER, KANSAS

JEFFREY S. GILLAM LICENSED 0338 KANSAS PROFESSIONAL ARCHITECT

REVISION:

DATE: 9-4-2024
JOB: 21-3168
SHEET NO.:

A4.3

COPYRIGHTED©

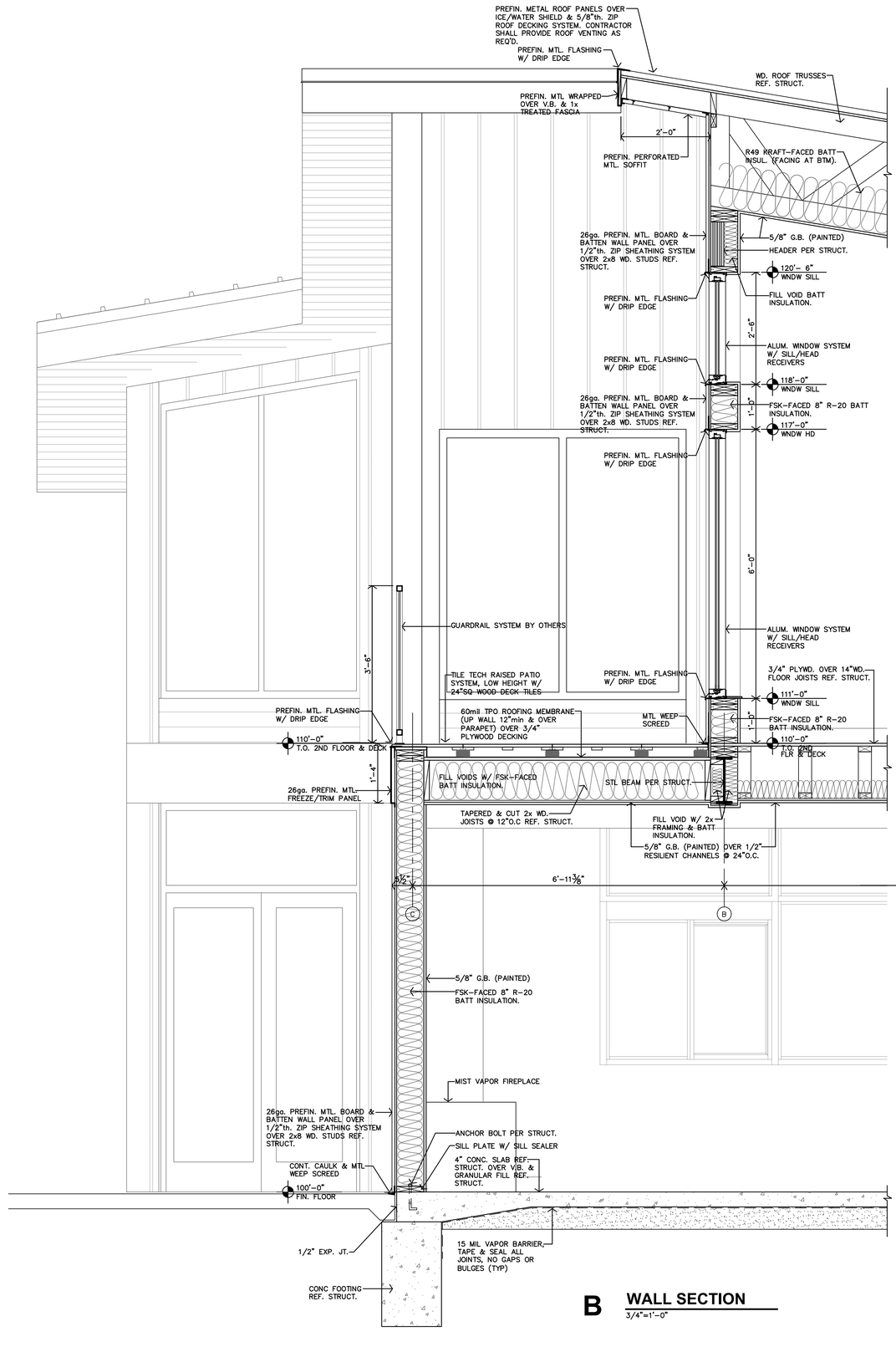

B **WALL SECTION**
3/4"=1'-0"

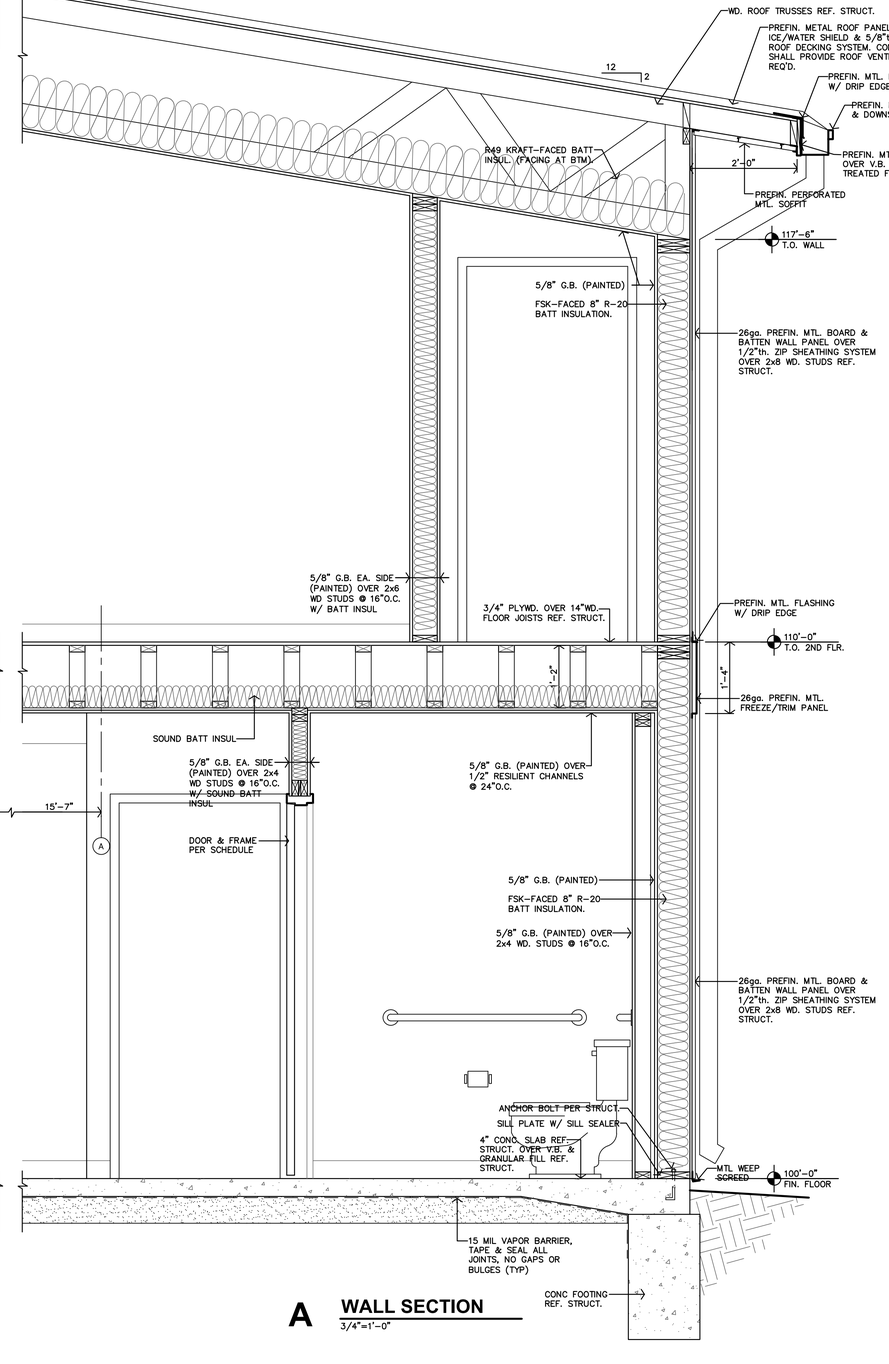

A **WALL SECTION**
3/4"=1'-0"

JonesGillamRenz
730 N. Ninth
Salina, KS 67401
1881 Main Street, Suite 301
Kansas City, MO 64108
785.827.0386
jgr@jgrarchitects.com

ROOTS COFFEE CO.

9805 S. YODER ROAD

YODER, KANSAS

JEFFREY S. GILLAM LICENSED 3382 KANSAS PROFESSIONAL ARCHITECT

REVISION:

DATE: 9-4-2024
JOB: 21-3168
SHEET NO.:

A4.4

COPYRIGHTED©

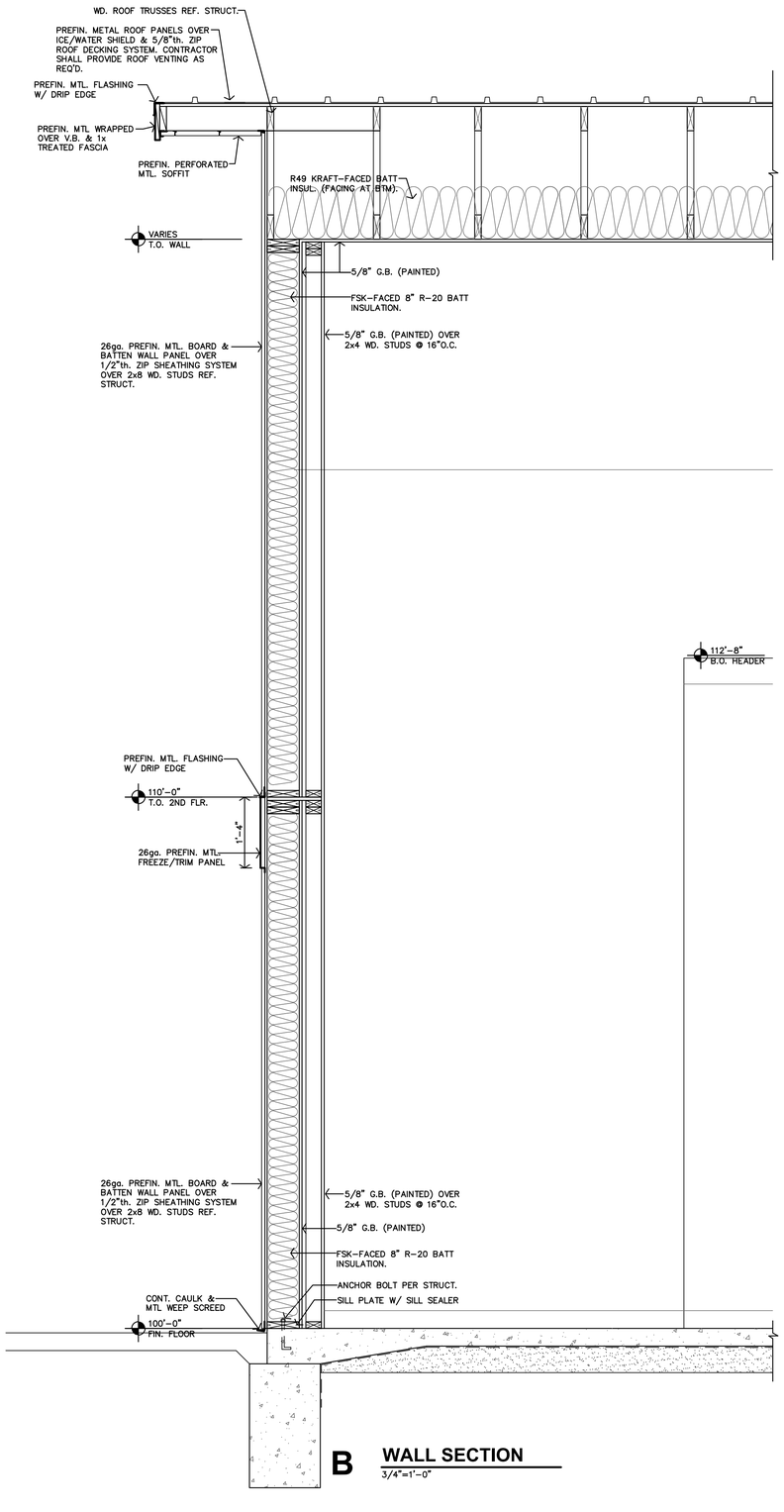

JonesGillamRenz
730 N. Ninth
Salina, KS 67401
1881 Main Street, Suite 301
Kansas City, MO 64108
785.827.0386
jgr@jgrarchitects.com

JGR

ROOTS COFFEE CO.

9805 S. YODER ROAD

YODER, KANSAS

JEFFREY S. GILLAM LICENSED 3382 KANSAS PROFESSIONAL ARCHITECT

REVISION:

DATE: 9-4-2024
JOB: 21-3168
SHEET NO.:

A4.5

COPYRIGHTED©

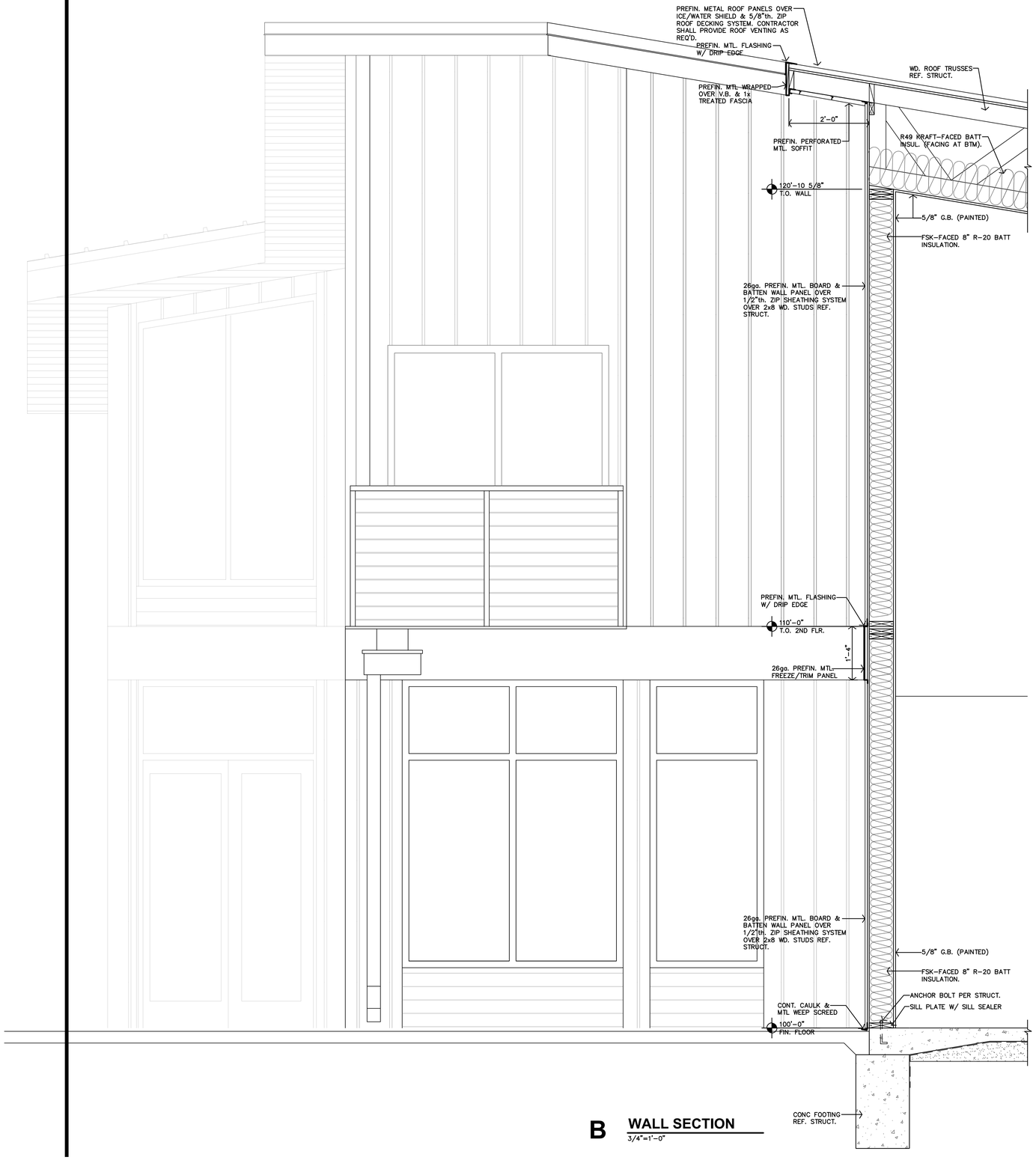

B **WALL SECTION**
3/4"=1'-0"

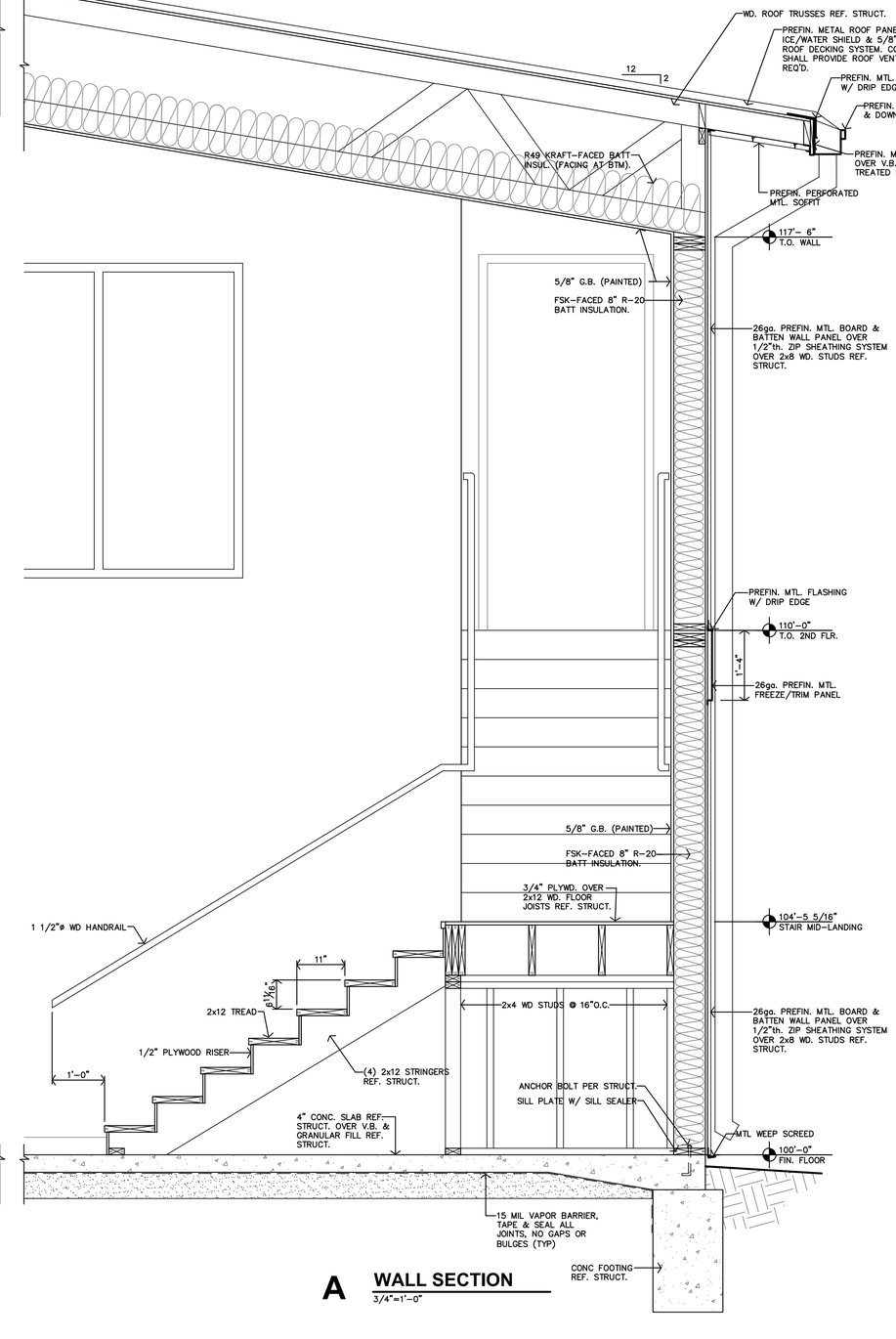

A **WALL SECTION**
3/4"=1'-0"

JonesGillamRenz
730 N. Ninth
Salina, KS 67401
1881 Main Street, Suite 301
Kansas City, MO 64108
785.827.0386
jgr@jgrarchitects.com

ROOTS COFFEE CO.

9805 S. YODER ROAD

YODER, KANSAS

JEFFREY S. GILLAM
LICENSED
4382
KANSAS
PROFESSIONAL ARCHITECT

REVISION:

DATE: 9-4-2024
JOB: 21-3168
SHEET NO.:

A4.6

COPYRIGHTED ©

A **ROOF PLAN**
1/4"=1'-0"

JonesGillamRenz
730 N. Ninth
Salina, KS 67401
785.827.0386
1881 Main Street, Suite 301
Kansas City, MO 64108
jgr@jgrarchitects.com

ROOTS COFFEE CO.

9805 S. YODER ROAD

YODER, KANSAS

JEFFREY S. GILLAM LICENSED 4382 KANSAS PROFESSIONAL ARCHITECT

REVISION:

DATE: 9-4-2024
JOB: 21-3168
SHEET NO.:

A5.1

COPYRIGHTED©

REFLECTED CEILING PLAN NOTES

GENERAL

1. CONTRACTOR SHALL COORDINATE CEILING LAYOUT WITH MECHANICAL AND ELECTRICAL FIXTURE LOCATIONS. NOTIFY ARCHITECT IMMEDIATELY OF ANY CONFLICT OF DISCREPANCY.
2. MECHANICAL/ELECTRICAL FIXTURES AT RATED CEILINGS SHALL BE HUNG IN CONFORMANCE TO U.L. SYSTEM REQUIREMENTS.
3. CEILING MOUNTED MECHANICAL EQUIPMENT AND SUSPENDED MECHANICAL EQUIPMENT MUST BE SUSPENDED DIRECTLY FROM THE STRUCTURE.
4. AREAS ABOVE THE FINISHED CEILING ARE PART OF A RETURN AIR PLENUM ALL MATERIALS INCLUDING THE INSULATION SHALL HAVE FLAME SPREAD LESS THAN 25 AND SMOKE DEVELOPED LESS THAN 50
5. SPECIAL CEILING GRID FRAMING IS REQUIRED AT SOME CEILING MOUNTED MECHANICAL EQUIPMENT. CONTRACTOR SHALL COORDINATE WITH MECHANICAL UNITS AND PROVIDED ALL SUSPENSION, TRIM, CLIPS, ETC. AS REQUIRED FOR A NEAT, FINISHED, AND SECURE CEILING SYSTEM.
6. WHERE SUSPENSION DEVICES, WIRES, RODS, ETC. PENETRATE CEILING GRID AND/OR TILE OR G.B. PENETRATIONS SHALL BE NEAT AND CLEANLY CUT. PENETRATION OPENING SHALL BE AS SMALL AS POSSIBLE. SEAL AT G.B.
7. ALL SOUND WALLS SHALL EXTEND TO STRUCTURE OR DECK, TAPE SEAL AT TOP.
8. SEAL VOIDS AT TOPS OF WALLS AND PENETRATIONS WITH U.L. LISTED FIRE BATT INSULATION, PILLOWS, AND/OR FIRE SEALANT AS REQUIRED BY CONDITION AT RATED WALLS.

CEILING TYPES
REFER SPECIFICATIONS

MP	METAL SOFFIT PANEL
GB	GYP BD (PAINTED)
ST	EXPOSED STRUCTURE & DECK

1 / 8'-8" — CLG. TYPE / CLG. HEIGHT A.F.F.

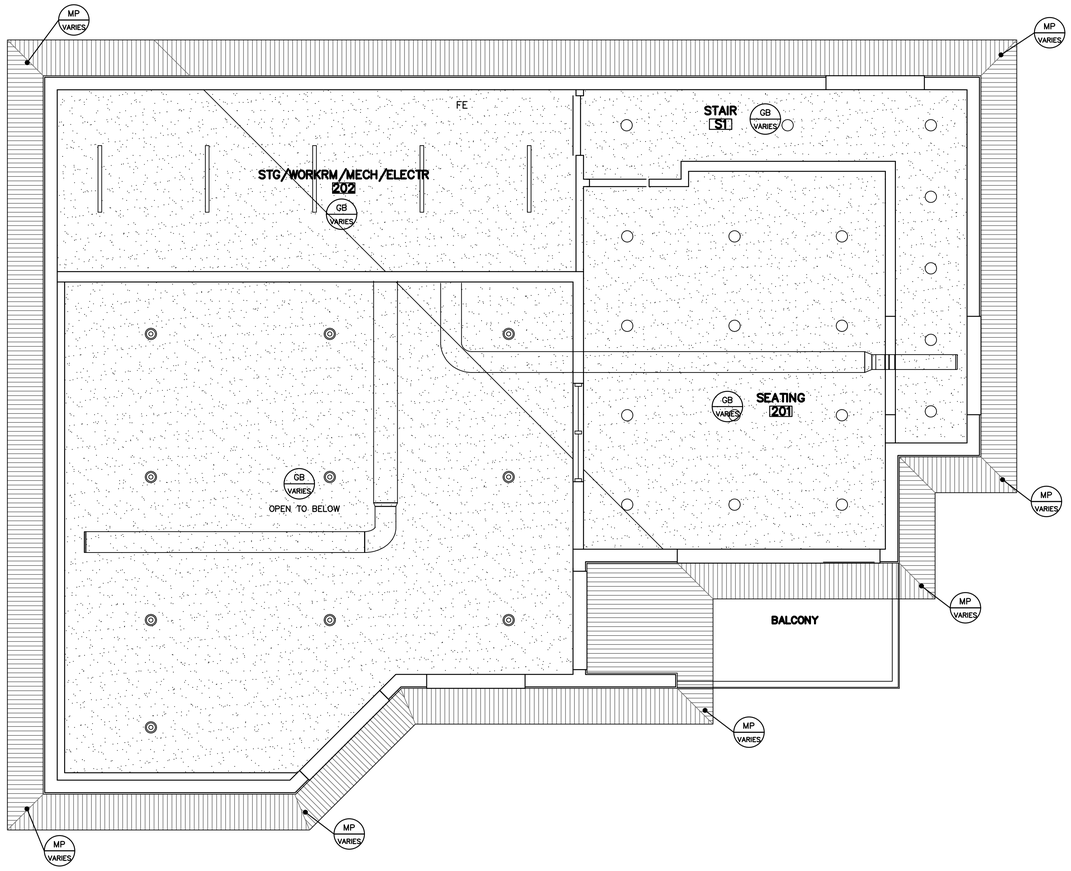

B **SECOND FLOOR REFLECTED CEILING PLAN**
1/4"=1'-0"

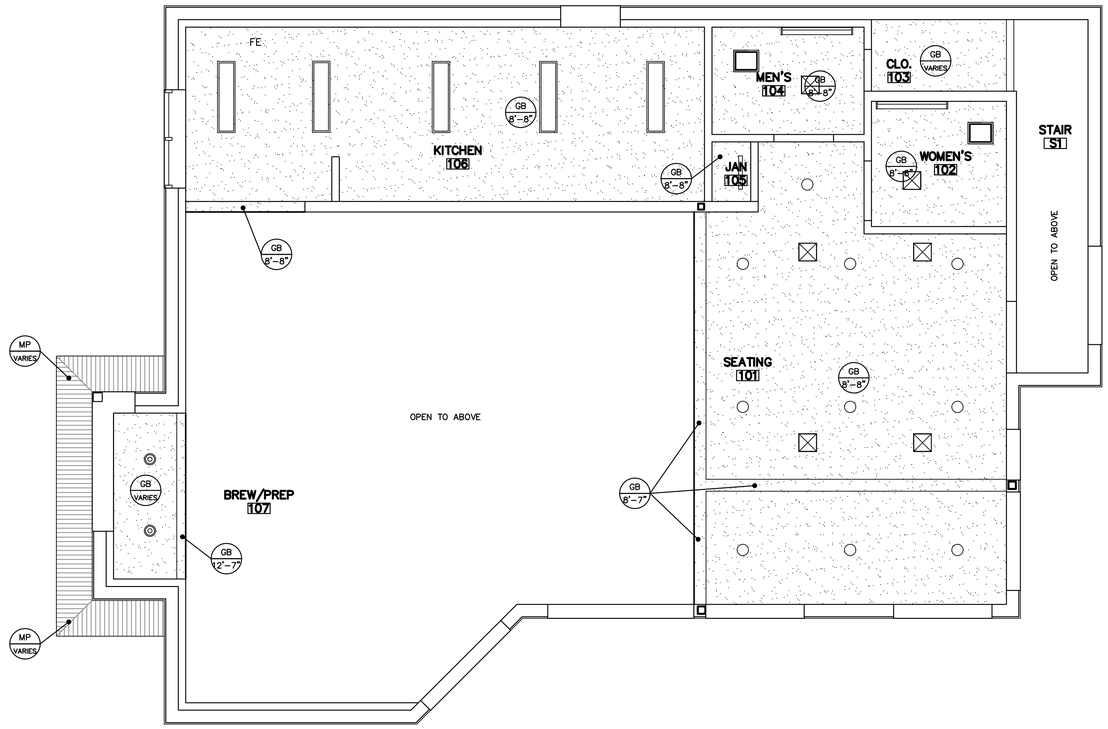

A **FIRST FLOOR REFLECTED CEILING PLAN**
1/4"=1'-0"

JonesGillamRenz
730 N. Ninth
Salina, KS 67401
1881 Main Street, Suite 301
Kansas City, MO 64108
785.827.0386
jgr@jgrarchitects.com

ROOTS COFFEE CO.

9805 S. YODER ROAD

YODER, KANSAS

JEFFREY S. GILLAM LICENSED 3382 KANSAS PROFESSIONAL ARCHITECT

REVISION:

DATE: 9-4-2024
JOB: 21-3168
SHEET NO.:

A7.1

COPYRIGHTED ©

GENERAL STRUCTURAL NOTES

GENERAL

1. DESIGN AND CONSTRUCTION SHALL BE IN ACCORDANCE WITH PROVISIONS OF THE 2018 EDITION OF THE INTERNATIONAL BUILDING CODE (IBC)

2. ELEVATIONS (XXX'-XX") SHOWN ON PLANS ARE TO TOP OF CONCRETE, STEEL, OR WOOD DECK U.N.O.. ELEVATIONS SHOWN ARE BASED ON FIRST FLOOR ELEVATION OF 100'-00" CONFIRM WITH ARCHITECTURAL.

3. ALL CONTRACTORS AND ANY SUB-CONTRACTORS SHALL VERIFY AND COORDINATE ALL DIMENSIONS AND DETAILS AS SHOWN ON STRUCTURAL DRAWINGS WITH ARCHITECTURAL DRAWINGS. WHERE DISCREPANCIES ARISE THE ARCHITECT AND ENGINEER SHALL BE NOTIFIED.

4. ALL CONTRACTORS AND ANY SUB-CONTRACTORS SHALL CONSULT ARCHITECTURAL, MECHANICAL, PLUMBING, AND ELECTRICAL DRAWINGS FOR VERIFICATION OF LOCATION AND DIMENSIONS OF CURBS, PADS, INSERTS, SLEEVES, DRIPS, REGLETS, REVEALS,FINISHES, DEPRESSIONS, DOOR CLOSERS, AND OTHER PROJECT REQUIREMENTS NOT SHOWN ON THE STRUCTURAL DRAWINGS.

5. SIZE AND LOCATION OF ALL ROOF, FLOOR, AND WALL OPENINGS TO BE VERIFIED WITH MECHANICAL AND ELECTRICAL DRAWINGS AND CONTRACTORS. OPENINGS LESS THAN 12 INCHES ARE GENERALLY NOT SHOWN.

6. THE ENGINEER SHALL NOT BE RESPONSIBLE FOR THE ACTS, ERRORS, OR OMISSIONS OF THE CONTRACTOR OR ANY SUB-CONTRACTOR, OR ANY OF THE CONTRACTOR OR SUBCONTRACTORS AGENTS OR EMPLOYEES, OR ANY OTHER PERSONS PERFORMING ANY OF THE WORK. CONTRACTOR SHALL BE SOLELY RESPONSIBLE FOR THE MEANS AND MANNER OF CONSTRUCTION AND FOR THE SAFETY OF PERSONS AND PROPERTY. CONTRACTOR SHALL BE RESPONSIBLE FOR COMPLYING WITH ALL SAFETY PRECAUTIONS AND REGULATION DURING THE WORK. THE ENGINEER WILL NOT ADVISE ON NOR ISSUE DIRECTION AS TO SAFETY PRECAUTION AND PROGRAMS.

7. THE ARCHITECT, CONTRACTOR, OWNER, AND END-USER OF THE STRUCTURE SHOULD EXPECT TO SEE SOME DEGREE OF RANDOM CRACKING IN THE SLAB-ON-GRADE. RANDOM CRACKING INCLUDES, BUT IS NOT LIMITED TO: SHRINKAGE CRACKS, CRACKS AT RE-ENTRANT CORNERS, AND CRACKS ADJACENT TO POINTS OF SLAB FIXITY. RANDOM CRACKING GENERALLY DOES NOT INCLUDE CRACKS WITH VERTICAL DISPLACEMENT. RANDOM CRACKS WITHIN THE SLAB-ON-GRADE DO NOT TYPICALLY IMPACT THE STRUCTURAL INTEGRITY OF THE SLAB AND ARE NOT NECESSARILY INDICATIVE OF STRUCTURAL ISSUES OR CONCERNS.

8. MECHANICAL UNITS AND EQUIPMENT SUPPORTED BY ROOF AND ELEVATED FLOOR STRUCTURE ARE SUBJECT TO THE APPROVAL OF THE STRUCTURAL ENGINEER, AND MUST BE SUBMITTED TO THE STRUCTURAL ENGINEER FOR VERIFICATION OF UNIT SIZE, WEIGHT, AND LOCATION.

9. THE STRUCTURAL DRAWINGS HEREIN REPRESENT THE FINISHED STRUCTURE. DURING ERECTION OF THE BUILDING, THE CONTRACTOR SHALL BE SOLELY RESPONSIBLE FOR TEMPORARY GUYING, SHORING, BRACING, FORMING, ETC., TO HOLD THE STRUCTURE IN PROPER ALIGNMENT AND TO WITHSTAND ALL LOADS TO WHICH THE STRUCTURE MAY BE SUBJECTED; INCLUDING LATERAL LOADS, TEMPERATURE DIFFERENTIALS, AND STOCKPILES OF MATERIAL AND EQUIPMENT. SUCH MEASURES SHALL BE LEFT IN PLACE AS LONG AS REQUIRED FOR SAFETY AND UNTIL ALL FRAMING AND CONNECTIONS ARE IN PLACE. THE INVESTIGATION, DESIGN, SAFETY, ADEQUACY AND INSPECTION OF SUCH TEMPORARY MEASURES ARE THE SOLE RESPONSIBILITY OF THE CONTRACTOR.

10. CONSTRUCTION DRAWINGS INDICATE GENERAL AND TYPICAL DETAILS OF CONSTRUCTION. WHERE CONDITIONS ARE NOT SPECIFICALLY SHOWN, SIMILAR DETAILS OF CONSTRUCTION SHALL BE USED, SUBJECT TO APPROVAL BY THE ENGINEER.

11. ALL STRUCTURAL SYSTEMS WHICH ARE TO BE COMPOSED OF COMPONENTS TO BE FIELD ERECTED SHALL BE SUPERVISED BY THE SUPPLIER DURING MANUFACTURING, DELIVERY, HANDLING, STORAGE, AND ERECTION IN ACCORDANCE WITH THE SUPPLIERS INSTRUCTIONS AND REQUIREMENTS.

12. CONTRACTOR AND SUB-CONTRACTORS SHALL THOROUGHLY REVIEW ALL DRAWINGS AND SPECIFICATIONS PRIOR TO SUBMITTING BIDS. MISCELLANEOUS FASTENERS, CLIPS, ETC., THAT ARE NOT DETAILED ON THE DRAWINGS BUT ARE PART OF THE REQUIREMENTS FOR FULL INSTALLATION OF ALL STRUCTURAL SYSTEMS ARE TO BE PART OF THE BID. THE CONTRACTOR SHALL VISIT THE SITE PRIOR TO THE BID TO ASCERTAIN CONDITIONS WHICH MY ADVERSELY AFFECT THE BID.

13. ALL OMISSIONS AND CONFLICTS BETWEEN THE VARIOUS ELEMENTS OF THE CONSTRUCTION DRAWINGS AND/OR SPECIFICATION AND/OR EXISTING CONDITIONS SHALL BE BROUGHT TO THE ATTENTION OF THE ENGINEER BEFORE PROCEEDING WITH THE WORK.

14. CONTRACTOR SHALL REVIEW, STAMP, SIGN, AND DATE ALL SHOP DRAWINGS PRIOR TO FORWARDING TO THE ARCHITECT/ENGINEER. THE ENGINEER'S REVIEW IS TO BE FOR CONFORMANCE WITH THE DESIGN CONCEPT AND GENERAL COMPLIANCE WITH THE RELEVANT CONTRACT DOCUMENTS. THE ENGINEER'S REVIEW DOES NOT RELIEVE THE CONTRACTOR OF THE SOLE RESPONSIBILITY TO REVIEW, CHECK, AND COORDINATE THE SHOP DRAWINGS PRIOR TO SUBMISSION. THE CONTRACTOR REMAINS SOLELY RESPONSIBLE FOR ERRORS AND OMISSIONS ASSOCIATED WITH THE PREPARATION OF THE SHOP DRAWINGS AS THEY PERTAIN TO MEMBER SIZES, DETAILS, DIMENSION, ETC..

15. THE CONTRACTOR SHALL COORDINATE WITH ALL TRADES ALL DEPRESSIONS, DIMENSIONS, ELEVATIONS, SLEEVES, CHASES, HANGERS, OPENING, INSERTS, ANCHORS, EQUIPMENT SUPPORTS, AND DETAILS WITH THE ENTIRE CONTRACT DOCUMENT PACKAGE, INCLUDING SPECIFICATIONS AND ARCHITECTURAL, STRUCTURAL, MECHANICAL, ELECTRICAL, AND PLUMBING DRAWINGS. FOR CONCRETE CONSTRUCTION, THE INSERTS, EMBEDDED PLATES, ETC., SHALL NOT INTERFERE WITH REINFORCEMENT LOCATIONS.

16. THESE DRAWINGS INCLUDE SPECIFIED COMPONENTS AND PRODUCTS, I.E. EPOXY, METAL DECK. IF A SUPPLIER/MANUFACTURER DIFFERENT THAN SPECIFIED ON THESE DRAWINGS IS DESIRED AS A SUBSTITUTE, A SUBMITTAL SHOWING THE SUBSTITUTE IS EQUIVALENT TO THE PRODUCT SPECIFIED MUST BE PROVIDED TO AND APPROVED BY THE ENGINEER OF RECORD. IT IS THE SUBMITTERS RESPONSIBILITY TO SHOW THE SUBSTITUTE IS EQUIVALENT, NOT THE ENGINEER OF RECORD.

17. THE OWNER SHALL EMPLOY A SPECIAL INSPECTOR TO PERFORM INSPECTIONS IN ACCORDANCE WITH CHAPTER 17 OF THE IBC AS REQUIRED BY THE BUILDING OFFICIAL. INSPECTION REPORTS FOR THE ITEMS LISTED IN THE SPECIAL INSPECTION SCHEDULE SHALL BE FURNISHED TO THE STRUCTURAL ENGINEER OF RECORD IN A TIMELY MANNER AND SHALL INDICATE THAT WORK INSPECTED WAS DONE IN CONFORMANCE TO APPROVED CONSTRUCTION DOCUMENTS. DISCREPANCIES THAT ARE NOT CORRECTED SHALL BE BROUGHT TO THE ATTENTION OF THE STRUCTURAL ENGINEER OF RECORD PRIOR TO THE COMPLETION OF THAT PHASE OF WORK. A FINAL REPORT DOCUMENTING THE REQUIRED SPECIAL INSPECTIONS AND CORRECTION OF ANY DISCREPANCIES NOTED IN THE INSPECTIONS SHALL BE SUBMITTED TO THE OWNER AND STRUCTURAL ENGINEER OF RECORD.

DESIGN LOADS

1.	ROOF LIVE LOAD	20 PSF
2.	FLOOR LIVE LOAD (CORRIDOR)	100 PSF
3.	FLOOR LIVE LOAD (DINING)	100 PSF
4.	FLOOR LIVE LOAD (STORAGE)	125 PSF
5.	FLOOR LIVE LOAD (DECK)	100 PSF
6.	GROUND SNOW LOAD	15 PSF
7.	ROOF SNOW LOAD	11 PSF
8.	OCCUPANCY CATEGORY	II
9.	BASIC WIND SPEED (ASCE/SEI 7)	110 M.P.H. EXPOSURE C
10.	WIND COMPONENTS AND CLADDING	27 PSF (WALLS)
11.	SEISMIC DESIGN CATEGORY (ASCE/SEI 7)	B
	SDS	0.092
	SD1	0.081
	SITE CLASS	D
	SEISMIC FORCE RESISTING SYSTEM	SHEAR WALLS

12. ROOF TRUSS DESIGN LOADS

TOP CHORD LIVE*	20 PSF
TOP CHORD DEAD	10 PSF
BOTTOM CHORD LIVE*	10 PSF
BOTTOM CHORD DEAD	10 PSF

*LIVE LOADS ARE NOT CONCURRENT

FOUNDATION

1. DESIGN ALLOWABLE SOIL BEARING PRESSURE OF 1,500 PSF HAS BEEN ASSUMED. ALL EXTERIOR FOOTINGS TO BE 3'-0" BELOW FINISH GRADE UNO.

2. UNLESS NOTED OTHERWISE; CENTER COLUMN FOOTINGS ON COLUMN CENTERLINES, CENTER WALL FOOTINGS ON FOUNDATION WALLS.

3. SLAB ON GRADE SHALL BE UNDERLAIN BY VAPOR BARRIER AND 6 INCHES MINIMUM OF CRUSHED ROCK OR CONCRETE. REINFORCE ALL SLABS ON GRADE WITH #3 AT 18 INCHES EACH WAY IN TOP 1/3 OF SLAB UNLESS NOTED OTHERWISE. AT DROPPED OR DEPRESSED SLABS ON GRADE MAINTAIN GRAVEL THICKNESS, SLAB DEPTH, REINFORCEMENT AND REINFORCEMENT POSITION.

4. BACK FILL AROUND THE EXTERIOR FOUNDATION WALLS WITH A FREE DRAINING GRANULAR MATERIAL TO THE ELEVATION OF THE ROUGH GRADE. PLACEMENT OF BACKFILL IS NOT ALLOWED UNTIL THE SLAB ON GRADE IS IN PLACE AND THE MAIN FLOOR DIAPHRAGM IS COMPLETED. TUNNEL CONCRETE WORK, FREE STANDING AND FOUNDATION WALLS SHALL BE COMPLETE AND AT DESIGN STRENGTH BEFORE BACKFILL IS PLACED.

5. CONTRACTOR TO KEEP EXCAVATIONS DRY AND PROTECTED FROM FROST AT ALL TIMES DURING THE FOUNDATION CONSTRUCTION. NOTIFY ENGINEER IF NATURE OF SOIL AT DEPTHS SHOWN IS NOT SUITABLE FOR FOUNDATIONS.

CAST-IN-PLACE CONCRETE

1. MINIMUM COMPRESSIVE STRENGTH AT 28 DAYS

FOOTINGS	3500 PSI MAX. W/C RATIO OF 0.50
INTERIOR SLABS ON GRADE	4000 PSI MAX. W/C RATIO OF 0.45
SLABS OVER STEEL DECK	3500 PSI MAX. W/C RATIO OF 0.45
EXPOSED CONCRETE SLABS AND GARAGE SLABS	4000 PSI MAX. W/C RATIO OF 0.45
FOUNDATION WALLS, WALLS, COLUMNS AND BEAMS	4000 PSI MAX. W/C RATIO OF 0.45

2. EXTERIOR EXPOSED CONCRETE SHALL HAVE 4 TO 6% ENTRAINED AIR. SLABS WITH HARD TROWELLED FINISH TO HAVE NO AIR ENTRAINMENT ADDED. COORDINATE WITH ARCHITECTURAL FOR FINISHES.

3. AGGREGATE FOR NORMAL WEIGHT CONCRETE SHALL MEET ASTM C33. MIX DESIGN SHALL CONTAIN A MINIMUM OF 50% COARSE AGGREGATES BY GRADATION REQUIREMENTS (NO.67 GRADING) SET FORTH IN ASTM C33.

4. NO ALUMINUM SHALL BE PLACED IN THE CONCRETE.

5. CONSTRUCTION TO BE IN ACCORDANCE WITH ACI 318-05 (R-05), "CHAPTER 3 FOR STANDARDS FOR TESTS & MATERIALS, CHAPTERS 4, 5, 6 & 7 FOR CONSTRUCTION REQUIREMENTS". REFER TO ACI 302.1R-04 FOR SLAB ON GRADE MIX DESIGN.

6. PIPE OR ELECTRICAL CONDUIT EMBEDDED IN CONCRETE SHALL NOT BE LARGER IN OUTSIDE DIAMETER AT ITS WIDEST (OR FITTING) THAN 1/3 THE THICKNESS OF THE SLAB OR WALL. SLEEVES, CONDUIT, OR PIPES THROUGH SLABS AND WALLS SHALL BE PLACED NO CLOSER THAN THREE DIAMETERS ON CENTER AND THEY DO NOT DISPLACE REINFORCING. DO NOT CUT HOLES IN CONCRETE SLABS, BEAMS, COLUMNS, OR WALLS WITHOUT PRIOR APPROVAL OF THE ENGINEER.

7. LOCATION OF ALL CONSTRUCTION AND CONTROL JOINTS SHALL BE LOCATED AND DETAILED ON SHOP DRAWINGS AND ARE SUBJECT TO ENGINEERS APPROVAL. IF SLAB ON GRADE CONTROL JOINTS ARE NOT SPECIFICALLY LOCATED ON DRAWINGS, PROVIDE CONTROL JOINTS AT 10'-0" ON CENTER MAXIMUM WITH A LENGTH TO WIDTH RATIO OF 1.5. PROVIDE (2) #4x4'-0" AT ALL NON-CONTINUOUS CONTROL JOINTS. PROVIDE (2) #4x4'-0" AND (1) #4x24"x24" CORNER BAR AT ALL REENTRANT CORNERS OF SLAB ON GRADE.

8. REFER TO ARCHITECTURAL DRAWINGS FOR LOCATION AND DIMENSION OF CONCRETE REVEALS, NOTCHES, REGLETS, DRIPS, PADS, CURBS, CHAMFERS BLOCKOUTS AT DOORWAYS, AND ALL OTHER PROJECT REQUIREMENTS NOT SHOWN ON STRUCTURAL DRAWINGS. CHAMFER ALL EXPOSED CORNERS OF BEAMS, COLUMNS, JOISTS AND WALLS, SUBJECT TO ARCHITECTS APPROVAL.

REINFORCING STEEL

1. TRUSS TYPE MASONRY JOINT REINFORCEMENT: W1.7 (9 GAGE), ASTM A1064, FY=70,000 PSI

2. WELDED WIRE REINFORCING (WWR): ASTM A82 AND A185

3. DEFORMED BARS (REBAR): ASTM A615, GRADE 40 FOR #3; GRADE 60 FOR #4 AND LARGER; ASTM A706 FOR WELDED CONDITIONS.

4. LAP SPLICES:

MASONRY:	48-BAR DIAMETERS AT CELLS WITH SINGLE BAR (HORIZ. AND VERT.)
	64-BAR DIAMETERS AT CELLS WITH TWO BARS (HORIZ. AND VERT.)
CONCRETE:	CLASS "B" LAP SPLICE, TYPICAL UNLESS NOTED OTHERWISE.
WELDED WIRE FABRIC:	WIRE SPACING +2"

5. CONCRETE COVER FOR CAST-IN-PLACE AND NON-PRE-STRESSED CONCRETE SHALL BE AS SPECIFIED BELOW U.N.O. ON THESE DRAWINGS:

CONCRETE CAST AGAINST SOIL	3"
FORMED CONCRETE EXPOSED TO EARTH OR WEATHER (#6 OR GREATER)	2"
FORMED CONCRETE EXPOSED TO EARTH OR WEATHER (#5 OR LESS)	1 1/2"
CONCRETE NOT EXPOSED TO EARTH OR WEATHER (SLAB, WALL, JOIST)	3/4"
CONCRETE NOT EXPOSED TO EARTH OR WEATHER (BEAM, COLUMN)	1 1/2"
SLAB ON GRADE	1 1/2"

6. SECURELY TIE ALL REINFORCING IN PLACE WITH DOUBLE ANNEALED 16-GAUGE IRON WIRE OR APPROVED CLIPS PRIOR TO CONCRETE OR GROUT PLACEMENT.

7. SUBMIT SHOP DRAWINGS OF REINFORCING STEEL FOR REVIEW BY THE ARCHITECT AND ENGINEER PRIOR TO FABRICATION.

PRE-MANUFACTURED TRUSSES

1. TRUSS DESIGN LOADS PER DESIGN LOAD SECTION OF THE GENERAL STRUCTURAL NOTES.

2. TRUSS DESIGNS AND ERECTION PLANS SHALL BE BY A PROFESSIONAL ENGINEER REGISTERED IN THE STATE OF THE PROJECT CONSTRUCTION. TRUSS DESIGN DRAWINGS SHALL SHOW TRUSS SPACING, TRUSS MARK NUMBERS (CORRESPONDING TO THE DESIGN CALCULATIONS), CONCENTRATED LOADS, PERMANENT LATERAL RESTRAINT AND DIAGONAL BRACING OF INDIVIDUAL TRUSS MEMBERS, ERECTION TEMPORARY LATERAL RESTRAINT AND DIAGONAL BRACING OF INDIVIDUAL TRUSS MEMBERS, PERMANENT BUILDING STABILITY BRACING OF THE TRUSSES, AND ALL RIDGE, VALLEY AND EAVE MEMBERS. ALL OF THE PREVIOUSLY MENTIONED COMPONENTS OF THE TRUSS PACKAGE SHALL BE ENGINEERED BY THE TRUSS SUPPLIER WITH SUPPORTING CALCULATIONS. SHOP DRAWINGS SHALL INCLUDE, FOR EACH TYPE OF TRUSS, DIMENSIONS AND CONFIGURATIONS, BRACING LOCATIONS BOTH PERMANENT AND TEMPORARY, SPECIFICATIONS FOR CONNECTION PLATES AND NUMBER AND SIZE OF REQUIRED FASTENERS. DESIGN CALCULATIONS, SHOP DRAWINGS AND ERECTION PLANS SHALL BE SUBMITTED FOR REVIEW BY THE ARCHITECT AND ENGINEER OF RECORD PRIOR TO FABRICATION.

3. TRUSS DESIGN SHALL INCLUDE THE FOLLOWING FORCES:
TRUSSES NOTED AS "DRAG TRUSS" SHALL BE DESIGNED FOR AXIAL DRAG FORCE SHOWN ON PLANS AND DETAILS. DRAG FORCE TO BE APPLIED AXIALLY TO BOTTOM CHORD AND RESOLVED INTO ROOF DIAPHRAGM THROUGH THE TOP CHORD. BOTTOM CHORD "COLUMN" LENGTH IS DISTANCE BETWEEN SHEAR WALLS.

4. MAXIMUM TRUSS DEFLECTIONS TO BE: L/360 LIVE LOAD
L/240 TOTAL LOAD

5. THE ROOF PLANS ARE DIAGRAMMATIC TO ASSIST TRUSS FABRICATOR IN FRAMING CONCEPTS. FABRICATOR AND ERECTOR TO NOTE THAT PLANS DO NOT DEFINE THE ACTUAL NUMBER OF PIECES TO BE PLACED.

6. TRUSS FABRICATOR SHALL PROVIDE GALVANIZED METAL FRAMING ANCHORS FOR TRUSS CONNECTIONS AT BEARING LOCATIONS. AT ALL LOCATIONS OF UPLIFT IN EXCESS OF 500 LBS, TRUSS FABRICATOR TO SUPPLY GALVANIZED METAL FRAMING ANCHORS CAPABLE OF RESISTING THE EXCESS UPLIFT. TRUSS FABRICATOR TO PROVIDE GALVANIZED METAL HANGERS WHERE TRUSS ARE SUPPORTED BY GIRDERS, DOUBLE TRUSSES, ETC TO MAINTAIN LEVEL CEILING BELOW.

WOOD

1. ALL WOOD BEARING ON CONCRETE OR MASONRY, IF LESS THAN 4'-0" ABOVE FINISH GRADE, SHALL BE PRESSURE TREATED. WHEREVER NECESSARY TO CUT OR DRILL TREATED LUMBER, TREAT THE CUT OR BORED SURFACES WITH TWO HEAVY COATS OF THE SAME PRESERVATIVE AS USED IN ORIGINAL TREATMENT.

LUMBER MINIMUM PROPERTIES SCHEDULE

SPECIES/PRODUCT	GRADE	Fb (PSI)	Ft (PSI)	Fv (PSI)	Fc (PSI)	Fc (PSI)	E (PSI)
SPRUCE-PINE-FIR (NORTH)	No. 2	875	450	135	425	1150	1,400,000
MICROLLAM LVL	1.9E	2,600	1,555	285	750	2,510	1,900,000

2. PLYWOOD SHEATHING SHALL CONFORM TO THE CURRENT EDITION OF THE U.S. DEPARTMENT OF COMMERCE VOLUNTARY PRODUCT STANDARD 1 OR 2 (DOC PS 1 OR 2) OR THE APA PANEL DESIGN SPECIFICATION (PDS) AND SHALL BE INSTALLED IN STAGGERED PATTERN.

3. BOLT HOLES IN WOOD SHALL BE DRILLED 1/16" MAXIMUM OVERSIZE. HOLES FOR SCREWS AND LAG SCREWS SHALL BE FIRST BORED FOR THE SAME DEPTH AND DIAMETER OF THE SHANK, THEN THE REMAINDER OCCUPIED BY THE THREAD PORTION SHALL BE BORED NOT LARGER IN DIAMETER THAN THE ROOT OF THE THREAD. ALL SCREWS SHALL BE SCREWED NOT DRIVEN INTO PLACE. PROVIDE WASHERS UNDER ALL NUTS AND HEADS OF BOLTS AND LAG SCREWS.

4. PROVIDE SOLID BLOCKING AT MID-HEIGHT OF ALL WALLS U.N.O.

5. PROVIDE SOLID BLOCKING BETWEEN JOISTS AT ALL SUPPORTS.

6. WOOD FRAMING AND CONSTRUCTION SHALL CONFORM TO THE CURRENT EDITION OF THE NATIONAL DESIGN SPECIFICATION (NDS) FOR WOOD CONSTRUCTION.

7. ALL COLUMNS SHOWN ON STRUCTURAL DRAWINGS SHALL BE CONTINUOUS U.N.O.

8. SET ALL JOISTS WITH CROWN UP.

9. TYPICAL FRAMING ANCHORS SHALL BE "SIMPSON STRONG TIE" OR APPROVED EQUIVALENT AS INDICATED ON DRAWINGS. INSTALL AND CONNECT PER MANUFACTURER RECOMMENDATIONS.

10. CONNECTORS, ANCHORS, AND FASTENERS ATTACHED TO PRESSURE TREATED WOOD TREATED WITH ACQ-C OR ACQ-D SHALL BE GALVANIZED AND SHALL MEET ONE OF THE FOLLOWING SPECIFICATIONS: ASTM-A653-G185 OR GREATER; ASTM-A123-2.0 OZ/FT2 MIN; ASTM-A153; ASTM-B695-CLASS 110.

11. IF WOOD TREATMENT IS OTHER THAN LISTED ABOVE, CONTACT THE TREATMENT SUPPLIER FOR CORROSION PROTECTION REQUIREMENTS AND SUBMIT TO ARCHITECT/ENGINEER FOR APPROVAL. CONNECTIONS SHOULD NOT INCORPORATE DISSIMILAR METALS OR METALLIC COATINGS IN CONTACT WITH EACH OTHER.

STRUCTURAL AND MISCELLANEOUS STEEL

1. STEEL CONSTRUCTION MANUAL, 14TH EDITION MATERIAL SPECIFICATIONS U.N.O.

WIDE FLANGE AND S SHAPES	ASTM A992, FY=50KSI
CHANNELS, ANGLES, PLATES AND BARS	ASTM A36, FY=36KSI
HOLLOW STRUCTURAL SHAPES (HSS)	ASTM A500 GR. B, FY=46KSI
PIPE	ASTM A53, GR. B, FY=35KSI
STRUCTURAL BOLTS (U.N.O.)	ASTM A325
MACHINE BOLTS (WHERE NOTED)	ASTM A307
ANCHOR BOLTS AND RODS AND THREADED RODS	ASTM F1554 GRADE 36KSI
HIGH STRENGTH ANCHOR BOLTS AND RODS (AS NOTED)	ASTM F1554 GRADE 105KSI
HEADED OR THREADED STUD ANCHORS (H.S.A. OR T.S.A.)	ASTM A108-69T
DEFORMED BAR ANCHORS (D.B.A.)	ASTM A496 OR ASTM A706
WELDING ELECTRODES	E70XX
NON-SHRINK GROUT (7,000 PSI)	ASTM C1107, GR. A
POWDER ACTUATED FASTENER (PAF OR PDF)	HILTI X-U (0.157" DIA)
EXPANSION BOLTS (CONCRETE)	HILTI KWIK BOLT TZ
EXPANSION BOLTS (MASONRY)	HILTI KWIK BOLT 3
EPOXY ADHESIVE - CONCRETE	HILTI HIT-HY 200
EPOXY ADHESIVE - MASONRY	HILTI HIT-HY 70 W/ SCREEN TUBE

2. ALL STRUCTURAL STEEL ERECTION AND FABRICATION SHALL BE ACCORDING TO THE CURRENT EDITION OF AISC "SPECIFICATIONS FOR DESIGN, FABRICATION, AND ERECTION OF STRUCTURAL STEEL FOR BUILDINGS".

3. ALL STRUCTURAL BOLTED CONNECTIONS SHALL BE ACCORDING TO THE CURRENT EDITION OF RCSC "SPECIFICATION FOR STRUCTURAL JOINTS USING HIGH-STRENGTH BOLTS" FOR SNUG TIGHTENED, PRETENSIONED, OR SLIP-CRITICAL JOINTS. ALL STRUCTURAL BOLTED CONNECTIONS TO BE SNUG TIGHTENED UNO. FOR SLIP-CRITICAL JOINTS, AS NOTED, THE USE OF TENSION INDICATING WASHERS OR TWIST-OFF BOLT ASSEMBLIES SHALL BE PERMITTED ONLY ACCORDING TO THE ABOVE MENTIONED STANDARD.

4. ALL WELDING SHALL BE PREFORMED IN ACCORDANCE WITH AWS D1.1. ALL WELDING SHALL BE PREFORMED BY AWS CERTIFIED WELDERS. ALL WELDING OF STRUCTURAL STEEL SHALL BE PREFORMED IN THE SHOP WHENEVER PRACTICAL. AN EFFORT HAS BEEN MADE TO INDICATE WELDS THAT CAN BE OR SHOULD BE FIELD WELDED. IT IS, HOWEVER, THE FABRICATORS RESPONSIBILITY TO DECIDE WHERE AND HOW THE WELDING IS TO BE ACCOMPLISHED TO ACHIEVE THE INTENDED RESULT.

5. COMPLETE JOINT PENETRATION (CJP) WELDING: PROVIDE BACKER BARS, RUN OFF TABS, AND ACCESS HOLES PER AWS D1.1. BACKER BARS SHALL BE REMOVED AFTER WELDING, THE ROOT WELD BACK GOUGED AND REPAIRED IF NECESSARY AND REINFORCED WITH A FILLET. RUN OFF TABS SHALL BE REMOVED AFTER WELDING WITH THE FLANGE EDGE GROUND SMOOTH.

6. STEEL FABRICATOR SHALL BE AN AISC CERTIFIED SHOP FOR CATEGORY 1 STEEL STRUCTURES AND SHALL MAINTAIN DETAILED QUALITY CONTROL PROCEDURES.

7. BEAMS SHALL BE FABRICATED FOR PLACEMENT OF NATURAL CAMBER UP.

8. STRUCTURAL STEEL SUPPLIER SHALL FURNISH COLUMN ANCHOR RODS.

9. HOLES IN STEEL SHALL BE DRILLED OR PUNCHED. ALL SLOTTED HOLES SHALL BE PROVIDED WITH SMOOTH EDGES. BURNING OF HOLES AND TORCH CUTTING AT THE SITE IS NOT PERMITTED. PROVIDE CONNECTIONS REQUIRED FOR ATTACHMENT OF WOOD AND STEEL MEMBERS.

10. USE CONNECTIONS AS DETAILED ON PLANS. WHEREVER CONNECTIONS ARE NOT DETAILED FABRICATOR SHALL REQUEST ENGINEER TO SUPPLY CONNECTION DETAIL.

11. ALL COLUMNS, ANCHOR BOLTS, BASE PLATES, ETC., HAVE BEEN DESIGNED FOR THE FINAL COMPLETED CONDITION AND HAVE NOT BEEN INVESTIGATED FOR POTENTIAL LOADINGS ENCOUNTERED DURING STEEL ERECTION AND CONSTRUCTION. CONFORMANCE TO OR DEVIATION FROM ALLOWABLE CAPACITIES DURING STEEL ERECTION IS THE SOLE RESPONSIBILITY OF THE CONTRACTOR (SEE GENERAL SECTION OF G.S.N.)

12. PRIOR TO GROUTING, COLUMNS SHALL BE ERECTED AND ALIGNED AS TO PLUMBNESS AND ELEVATION BY MEANS OF STEEL SHIMS OR LEVELING NUTS UNDER THE BASE PLATES. SETTING PLATES SHALL ONLY BE USED AS TEMPLATES TO LOCATE ANCHOR BOLTS DURING CONCRETE PLACEMENT.

ABBREVIATIONS

@	AT
#	NUMBER
AB	ANCHOR BOLT
ADD'L	ADDITIONAL
AESS	ARCHITECTURALLY EXPOSED STRUCTURAL STEEL
ALT	ALTERNATE
ARCH	ARCHITECTURAL
ATTM	ATTACHMENT
BLDG	BUILDING
BLKG	BLOCKING
BOT	BOTTOM
BSMT	BASEMENT
BTWN	BETWEEN
CFS	COLD FORMED STEEL
CJ	CONTROL OR CONSTRUCTION JOINT
CJP	COMPLETE JOINT PENETRATION WELD
CL	CENTERLINE
CLR	CLEAR
CMU	CONCRETE MASONRY UNITS
COL	COLUMN
CONC	CONCRETE
CONN	CONNECTION
CONT	CONTINUOUS
COORD	COORDINATE
DBA	DEFORMED BAR ANCHOR
DET	DETAIL
DIA	DIAMETER
DIM	DIMENSION
DIR	DIRECTION
DF-L	DOUGLAS FIR-LARCH
EA	EACH
EF	EACH FACE
EMBED	EMBEDDED
EN	EDGE NAILING
EOR	ENGINEER OF RECORD
EQ	EQUAL
EW	EACH WAY
EXIST	EXISTING
EXP	EXPANSION
FDN	FOUNDATION
FIN	FINISH
FLR	FLOOR
FN	FIELD NAILING
FRP	FIBER-REINFORCED POLYMER
FTG	FOOTING
FV	FIELD VERIFY
GA	GAUGE
GR	GRADE
HK	HOOK
HORIZ	HORIZONTAL
HS	HIGH STRENGTH
HSA	HEADED STUD ANCHOR
HSS	HOLLOW STRUCTURAL SHAPE
IBC	INTERNATIONAL BUILDING CODE
ID	INSIDE DIAMETER
INFO	INFORMATION
LBS	POUNDS
LG	LONG
LLH	LONG LEG HORIZONTAL
LLV	LONG LEG VERTICAL
LSL	LAMINATED STRAND LUMBER
LVL	LAMINATED VENEER LUMBER
MAX	MAXIMUM
MECH	MECHANICAL
MFR	MANUFACTURER
MIN	MINIMUM
MTL	METAL
NIC	NOT IN CONTRACT
NS	NON-SHRINK
OC	ON CENTER
OD	OUTSIDE DIAMETER
OPP	OPPOSITE
OSB	ORIENTED STRAND BOARD
PAF	POWDER ACTUATED FASTENER
PEMB	PRE-ENGINEERED METAL BUILDING
PL	PLATE
PLF	POUNDS PER LINEAR FOOT
PSF	POUNDS PER SQUARE FOOT
PSI	POUNDS PER SQUARE INCH
PSL	PARALLEL STRAND LUMBER
PT	POINT
QTY	QUANTITY
REINF	REINFORCING
REM	REMAINDER
REQ'D	REQUIRED
RTU	ROOF TOP UNIT
SCHD	SCHEDULE
SIM	SIMILAR
SLV	SHORT LEG VERTICAL
SOG	SLAB-ON-GRADE
SPF	SPRUCE-PINE-FIR
SQ	SQUARE
STD	STANDARD
T&B	TOP AND BOTTOM
THK	THICK
TOF	TOP OF FOOTING
TOM	TOP OF MASONRY
TOS	TOP OF STEEL
TOW	TOP OF WALL
TSA	THREADED STUD ANCHOR
TYP	TYPICAL
VERT	VERTICAL
UNO	UNLESS NOTED OTHERWISE
W/	WITH
WF	WIDE FLANGE
WWR	WELDED WIRE REINFORCING

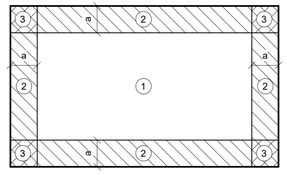

UPLIFT PRESSURE (PSF)

COMPONENT AREA (SF)	ROOF ZONES 1	2	3
10	28.1	32.5	43.5
100	28.1	30.3	30.3

NOTES:
1. WIND COMPONENTS AND CLADDING PRESSURES SHOWN ACT AWAY FROM THE ROOF SURFACE.
2. COMPONENT AREA SHOWN IS THE AREA TRIBUTARY TO THE COMPONENT. LINEAR INTERPOLATION IS ALLOWED BETWEEN 10 AND 100 SQUARE FEET.
3. a = 3'-5"

ENGINEERING CONSULTANTS, P.A.
1227 NORTH MAIN STREET
P.O. BOX 932
HUTCHINSON, KS 67504-0932
620-663-5434
www.engineering-consultants.com
info@engineering-consultants.com

JonesGillamRenz
730 N. Ninth
Salina, KS 67401
785.827.0386
1881 Main Street, Suite 301
Kansas City, MO 64108
jgr@jgrarchitects.com

ROOTS COFFEE CO.

9805 S. YODER ROAD

YODER, KANSAS

BRANDON FUQUA LICENSED 24769 9/4/2024 KANSAS PROFESSIONAL ENGINEER

REVISION:

DATE: 9/4/24
JOB: 21-3168
SHEET NO.:

S0.0

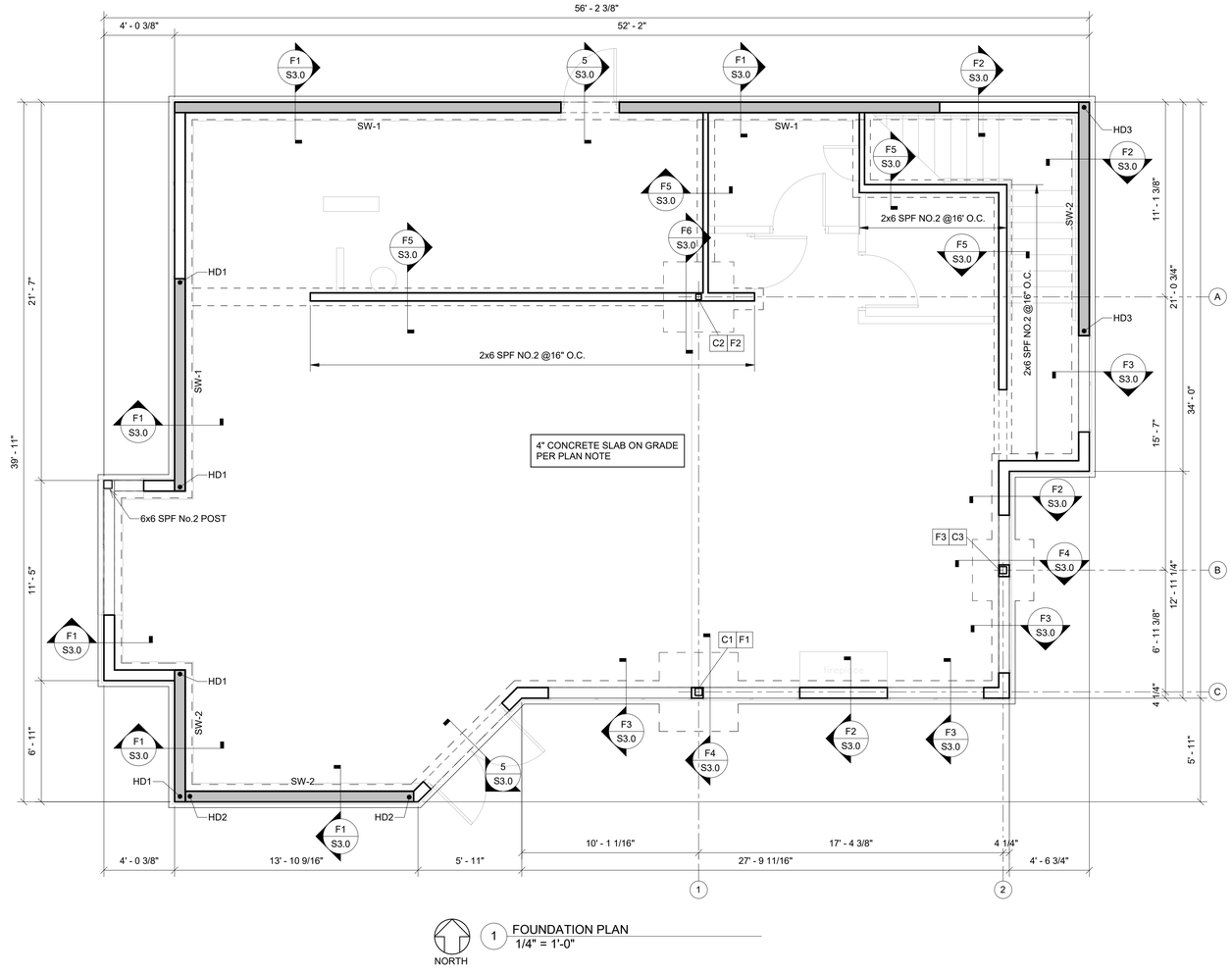

1 FOUNDATION PLAN
1/4" = 1'-0"

COLUMN SCHEDULE							
COLUMN MARK	SIZE	BASE PLATE	ANCHOR BOLTS	BASE PLATE ELEVATION	CAP PLATE	CAP PLATE BOLTS	REMARKS
C1	HSS5x5x3/16	3/4"x8"x11"	(4) 3/4"ø	99'-5"	1/4"x5"x5"	N/A	
C2	HSS4X4X1/4	3/4"10"x10"	(4) 3/4"ø	99'-5"	1/2"x5"x10"	(2) 3/4"ø	CAP PLATE BOLTS THRU DOUBLE TOP PLATE
C3	HSS5x5x3/16	3/4"x8"x11"	(4) 3/4"ø	99'-5"	1/4"x5"x5"	N/A	

FOOTING SCHEDULE			
Mark	Size	Footing Reinforcing	Remarks
F1	4'-6" x 4'-6" x 2'-4"	#5 @ 12" O.C. EA WAY, TOP & BOT	
F2	4'-0" x 4'-0" x 1'-0"	#5 @ 12" O.C. EA WAY	
F3	3'-6" x 3'-6" x 2'-4"	#5 @ 12" O.C. EA WAY, TOP & BOT	

PLAN NOTES

1. FOR GENERAL STRUCTURAL NOTES (GSN) SEE SHEET S0.0
2. DIMENSIONS SHOWN HERE APPLY TO STRUCTURAL ELEMENTS ONLY. SEE ARCHITECTURAL FOR ANY DIMENSIONS NOT NOTED HERE.
3. 4" CONCRETE SLAB ON GRADE W/ 6x6 W1.4xW1.4 WWR 1.1/2" FROM TOP OF SLAB ON 6" CRUSHED ROCK BASE.
4. AT ALL SLAB RE-ENTRANT CORNERS, PROVIDE (1) #4x24"x24" CORNER BAR AND (2) #4x48" BARS
5. PROVIDE (2) #4x48" BARS AT ALL NON-CONTINUOUS CONTROL JOINTS
6. SLAB CONTROL JOINTS TO BE SPACED A MAXIMUM OF 10'-0" O.C. WITH A LENGTH TO WIDTH RATIO OF 1.5 MAXIMUM UNLESS SHOWN OTHERWISE ON PLAN.
7. ALL EXTERIOR WALLS TO BE:
   2x8 SPF No 2 @ 16" O.C. UNLESS NOTED OTHERWISE
8. ALL INTERIOR WALLS TO BE:
   2x4 SPF No 2 @16" O.C. UNLESS NOTED OTHERWISE
9. SW-x DENOTES SHEAR WALL PER SHEAR WALL SCHEDULE
10. HDx DENOTES SIMPSON STRONG-TIE SHEAR WALL HOLD DOWN
    HD1 - HDU2-SDS2.5 W/ (2) 2x8 SPF No 2 STUDS W/ 5/8"x12" EPOXY THREADED ROD
    HD2 - HDU5-SDS2.5 W/ (2) 2x8 SPF No 2 STUDS W/ 5/8"x12" EPOXY THREADED ROD
    HD3 - HDU8-SDS2.5 W/ (2) 2x8 SPF No 2 STUDS W/ 7/8"x16" EPOXY THREADED ROD
11. CONNECT WALL STUDS TO STEEL COLUMNS W/ SIMPSON 14x2-3/8" TB SELF-DRILLING SCREWS @ 12" OC

ENGINEERING CONSULTANTS, P.A.
1227 NORTH MAIN STREET
P.O. BOX 932
HUTCHINSON, KS 67504-0932
620-665-5394
www.engineering-consultants.com
info@engineering-consultants.com
ECPROJECT # 24117

JonesGillamRenz
730 N. Ninth
Salina, KS 67401
785.827.0386
1881 Main Street, Suite 301
Kansas City, MO 64108
jgr@jgrarchitects.com

ROOTS COFFEE CO.

9805 S. YODER ROAD

YODER, KANSAS

BRANDON FUQUA LICENSED 24769 9/4/2024 KANSAS PROFESSIONAL ENGINEER

REVISION:

DATE: 9/4/24
JOB: 21-3168
SHEET NO.:

S1.0

COPYRIGHTED ©

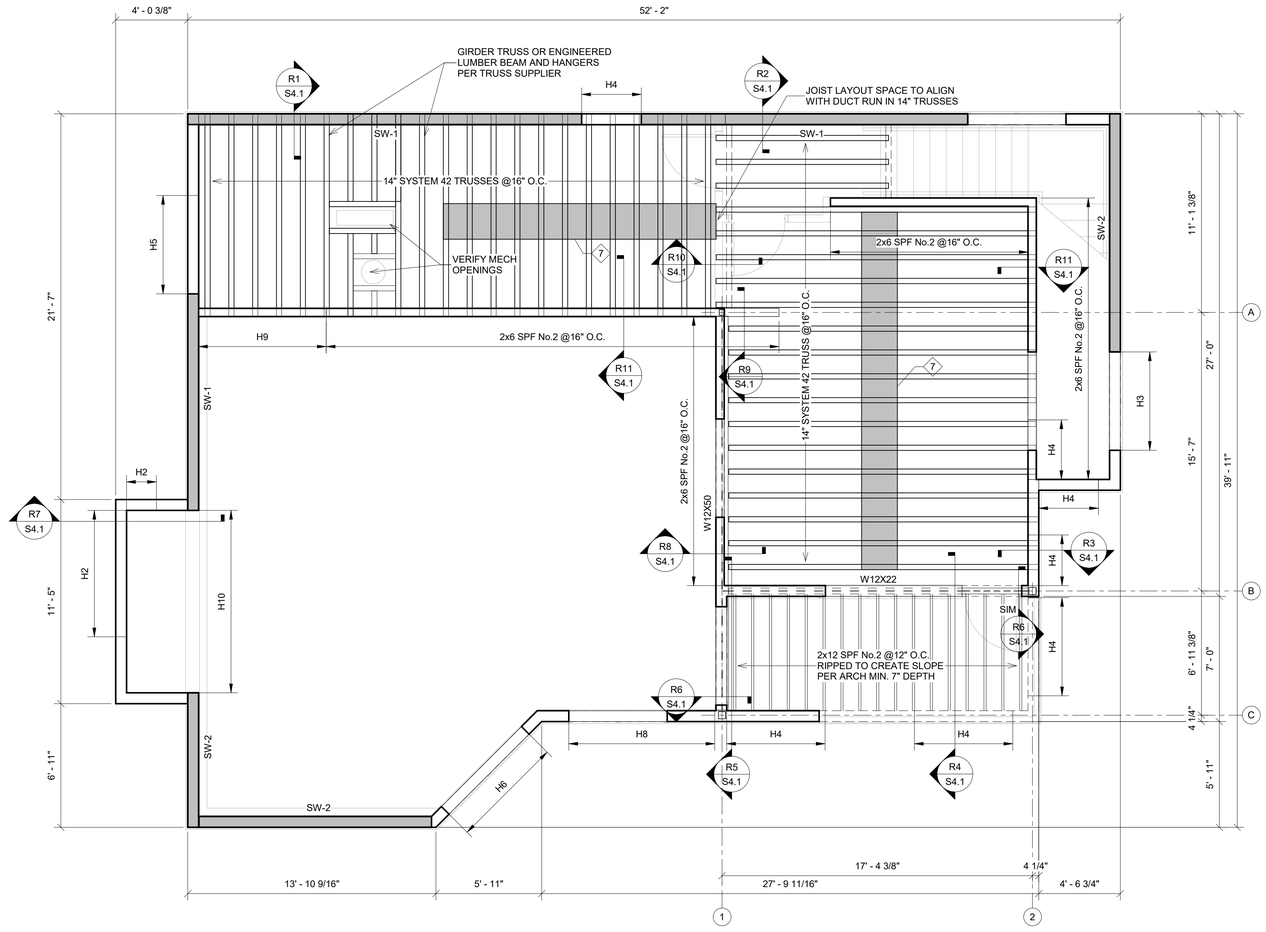

2 2ND FLOOR FRAMING PLAN
1/4" = 1'-0"

PLAN NOTES

1. FOR GENERAL STRUCTURAL NOTES (GSN) SEE SHEET S0.0
2. DIMENSIONS SHOWN HERE APPLY TO STRUCTURAL ELEMENTS ONLY. SEE ARCHITECTURAL FOR ANY DIMENSIONS NOT NOTED HERE.
3. ALL EXTERIOR STUD WALLS TO BE: 2x8 SPF No.2 @16" O.C.
4. INTERIOR BEARING WALLS TO BE: 2x4 SPF No. 2 @16" O.C. UNLESS NOTED OTHERWISE
5. ALL FLOOR TRUSSES TO BE DESIGNED PER REQUIREMENTS IN LOADS AND PRE-MANUFACTURED TRUSSES SECTION OF GENERAL STRUCTURAL NOTES.
6. SW-x DENOTES SHEAR WALL PER SHEAR WALL SCHEDULE.

7 RECT DUCT RUN CHASE IN FLOOR TRUSSES TO BE 24" WIDE BY 11" TALL.

ENGINEERING CONSULTANTS, P.A.
1227 NORTH MAIN STREET
P.O. BOX 932
HUTCHINSON, KS 67504-0932
620-663-4004
www.engineering-consultants.com
info@engineering-consultants.com

JonesGillamRenz
730 N. Ninth
Salina, KS 67401
785.827.0386
1881 Main Street, Suite 301
Kansas City, MO 64108
jgr@jgrarchitects.com

ROOTS COFFEE CO.

9805 S. YODER ROAD

YODER, KANSAS

BRANDON FUQUA LICENSED 24769 9/4/2024 KANSAS PROFESSIONAL ENGINEER

REVISION:

DATE: 9/4/24
JOB: 21-3168
SHEET NO.:

S1.1

COPYRIGHTED©

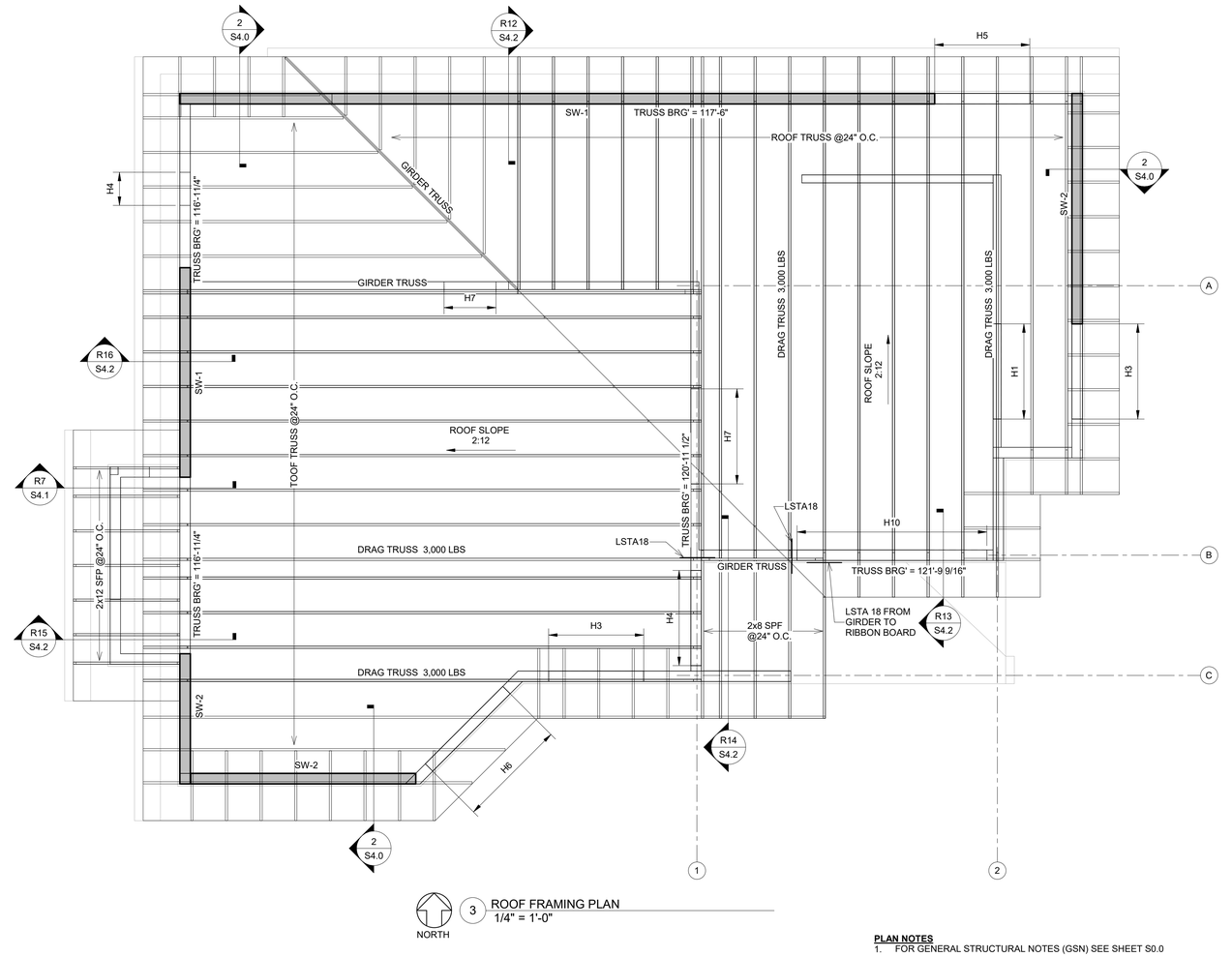

PLAN NOTES

1. FOR GENERAL STRUCTURAL NOTES (GSN) SEE SHEET S0.0
2. DIMENSIONS SHOWN HERE APPLY TO STRUCTURAL ELEMENTS ONLY. SEE ARCHITECTURAL FOR ANY DIMENSIONS NOT NOTED HERE.
3. ALL EXTERIOR STUD WALLS AND INTERIOR BEARING WALLS TO BE 2x8 SPF No 2 @ 16" O.C.
4. INTERIOR BEARING WALLS TO BE: 2x4 SPF No. 2 @16" O.C. UNLESS NOTED OTHERWISE
5. ROOF SHEATHING: 5/8" APA OSB ATTACHED WITH 10d (0.148"x3") RING SHANK NAILS @ 6" O.C. EDGES & 12" O.C. FIELD
6. ROOF TRUSS DESIGN PER GSN LOADS AND REQUIREMENTS
7. HEADERS PER HEADER SCHEDULE.
8. SW-X DENOTES SHEAR WALL TYPE AND LOCATION. SHEAR WALL TYPE AND HOLD DOWNS PER SHEAR WALL SCHEDULE.
9. THE ROOF PLANS ARE DIAGRAMMATIC TO ASSIST TRUSS FABRICATOR IN FRAMING CONCEPTS. SUBMIT TRUSS SHOP DRAWINGS IN ACCORDANCE WITH SPECIFICATIONS AND GSN'S PRIOR TO FABRICATION. FABRICATOR AND ERECTOR TO NOTE THAT PLANS DO NOT DEFINE THE ACTUAL NUMBER OF PIECES TO BE PLACED. TRUSS FABRICATOR SHALL PROVIDE GALVANIZED METAL TIE DOWNS AT EXTERIOR BEARING WALLS AND AT ALL LOCATIONS OF UPLIFT IN EXCESS OF 100 LBS. TRUSS FABRICATOR TO PROVIDE GALVANIZED METAL HANGERS WHERE TRUSS ARE SUPPORTED BY GIRDERS, DOUBLE TRUSSES, ETC TO MAINTAIN CEILING PLANE BELOW.
10. STRUCTURAL FASCIA TO BE: 2x8 SPF No.2 MIN 12'-0" LONG AT EACH CORNER W/ (3) 16d NAILS PER TRUSS TAIL.

ENGINEERING CONSULTANTS, P.A.
1227 NORTH MAIN STREET
P.O. BOX 932
HUTCHINSON, KS 67504-0932
620-663-5434
www.engineering-consultsnt.com
info@engineering-consultsnt.com

JonesGillamRenz
730 N. Ninth
Salina, KS 67401
785.827.0386
1881 Main Street, Suite 301
Kansas City, MO 64108
jgr@jgrarchitects.com

ROOTS COFFEE CO.

9805 S. YODER ROAD

YODER, KANSAS

BRANDON FUQUA LICENSED 24769 9/4/2024 KANSAS PROFESSIONAL ENGINEER

REVISION:

DATE: 9/4/24
JOB: 21-3168
SHEET NO.:

S2.0

COPYRIGHTED ©

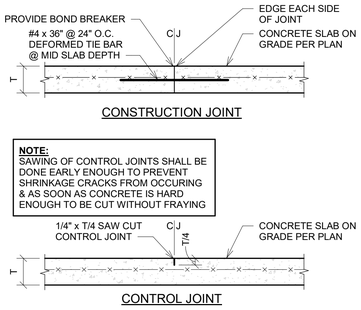

1 SLAB ON GRADE JOINTS
3/4" = 1'-0"

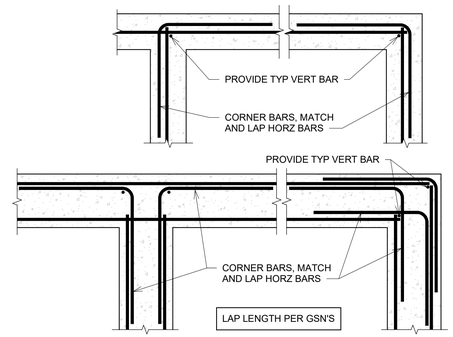

2 TYPICAL WALL REINFORCING
3/4" = 1'-0"

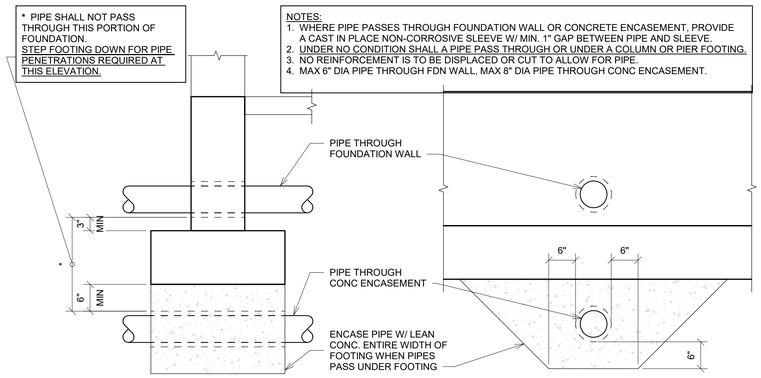

3 PIPE PENETRATION AT FOUNDATION WALL
3/4" = 1'-0"

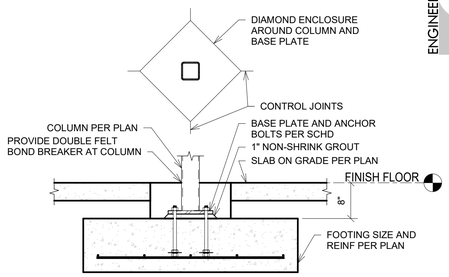

4 TYPICAL INTERIOR COLUMN FOOTING
3/4" = 1'-0"

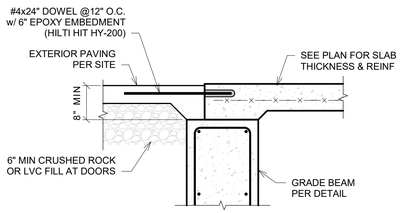

5 TYPICAL REINFORCING AT DOORWAYS
3/4" = 1'-0"

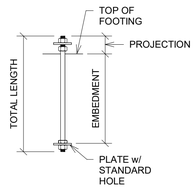

BOLT DIAMETER	EMBEDMENT	PLATE SIZE	BOLT GRADE
5/8"ø	--	--	F1554-36
3/4"ø	8"	--	F1554-36
1"ø	--	--	F1554-36
1-1/4"ø	--	--	F1554-36
1-1/2"ø	--	--	F1554-36
3/4"ø PEMB	--	--	F1554-36

6 ANCHOR BOLTS
NTS

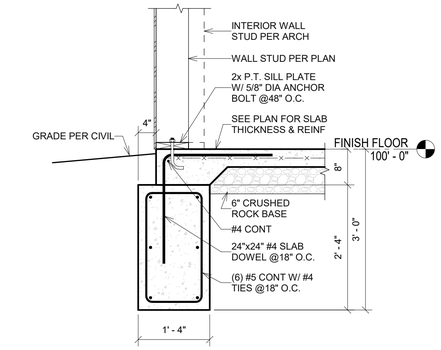

F1 Section F1
3/4" = 1'-0"

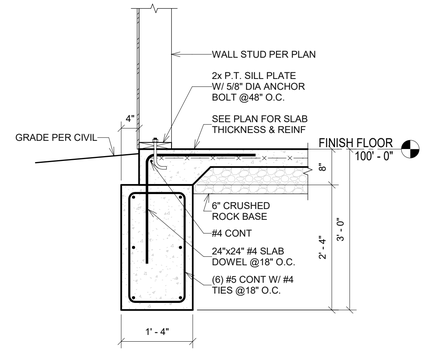

F2 Section F2
3/4" = 1'-0"

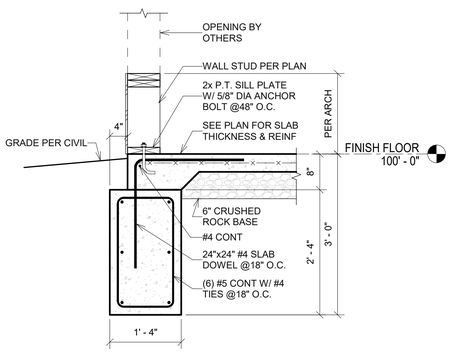

F3 Section F3
3/4" = 1'-0"

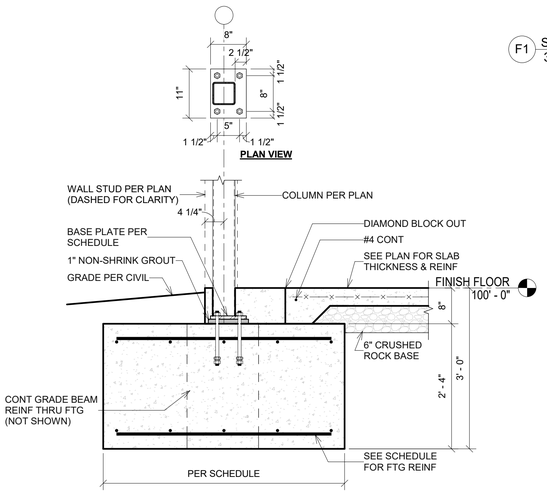

F4 Section F4
3/4" = 1'-0"

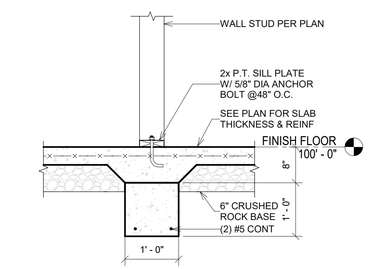

F5 Section F5
3/4" = 1'-0"

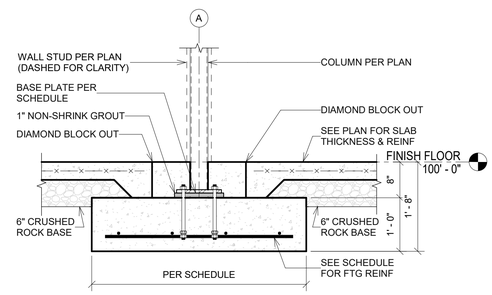

F6 Section F6
3/4" = 1'-0"

ENGINEERING CONSULTANTS, P.A.
1227 NORTH MAIN STREET
P.O. BOX 932
HUTCHINSON, KS 67504-0932
620-662-0954
www.engineering-consultants.com
info@engineering-consultants.com
ENGINEERING CONSULTANTS P.A.
CIVIL/STRUCTURAL/MECHANICAL

JonesGillamRenz
730 N. Ninth
Salina, KS 67401
785.827.0386
1881 Main Street, Suite 301
Kansas City, MO 64108
jgr@jgrarchitects.com

ROOTS COFFEE CO.
9805 S. YODER ROAD
YODER, KANSAS

BRANDON FUQUA
LICENSED
24769
9/4/2024
KANSAS
PROFESSIONAL ENGINEER

REVISION:

DATE: 9/4/24
JOB: 21-3168
SHEET NO.:

S3.0

COPYRIGHTED©

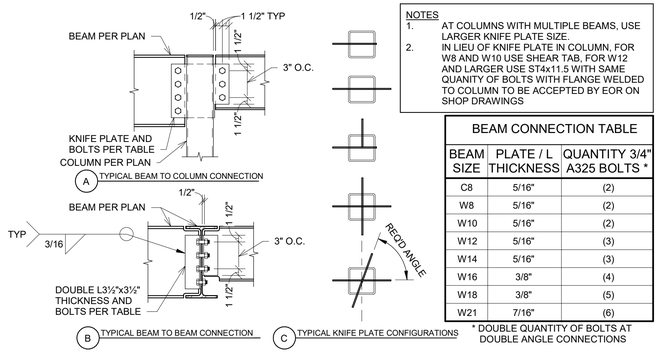

NOTES
1. AT COLUMNS WITH MULTIPLE BEAMS, USE LARGER KNIFE PLATE SIZE.
2. IN LIEU OF KNIFE PLATE IN COLUMN, FOR W8 AND W10 USE SHEAR TAB, FOR W12 AND LARGER USE ST4x11.5 WITH SAME QUANITY OF BOLTS WITH FLANGE WELDED TO COLUMN TO BE ACCEPTED BY EOR ON SHOP DRAWINGS

BEAM CONNECTION TABLE

BEAM SIZE	PLATE / L THICKNESS	QUANTITY 3/4" A325 BOLTS *
C8	5/16"	(2)
W8	5/16"	(2)
W10	5/16"	(2)
W12	5/16"	(3)
W14	5/16"	(3)
W16	3/8"	(4)
W18	3/8"	(5)
W21	7/16"	(6)

* DOUBLE QUANTITY OF BOLTS AT DOUBLE ANGLE CONNECTIONS

1 TYPICAL BEAM CONNECTION
3/4" = 1'-0"

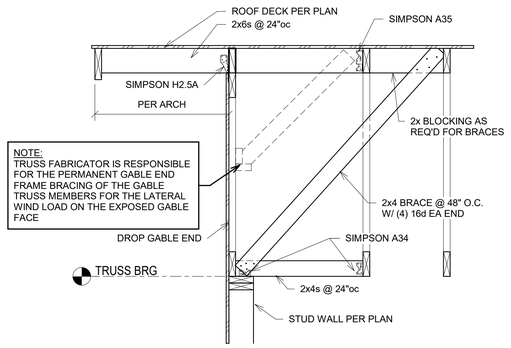

2 DROP GABLE FRAMING
3/4" = 1'-0"

NOTES:
1. SHEAR WALL LOCATIONS PER PLAN
2. SHEATHING PANELS TO BE 4'-0"x8'-0" AS POSSIBLE WITH LONG DIMENSION HORIZONTAL
3. MINIMUM EDGE DISTANCE FOR NAILS SHALL BE 3/8"
4. NAIL HEADS SHALL NOT BREAK OUTER PLY OF SHEATHING
5. NAILS SHALL BE COMMON WIRE TYPE UNO. PNEUMATIC DRIVEN FASTENERS MAY BE USED WITH ENGINEER APPROVAL
6. HOLD DOWNS TO BE LOCATED AS CLOSE TO ENDS OF SHEAR WALL AS POSSIBLE

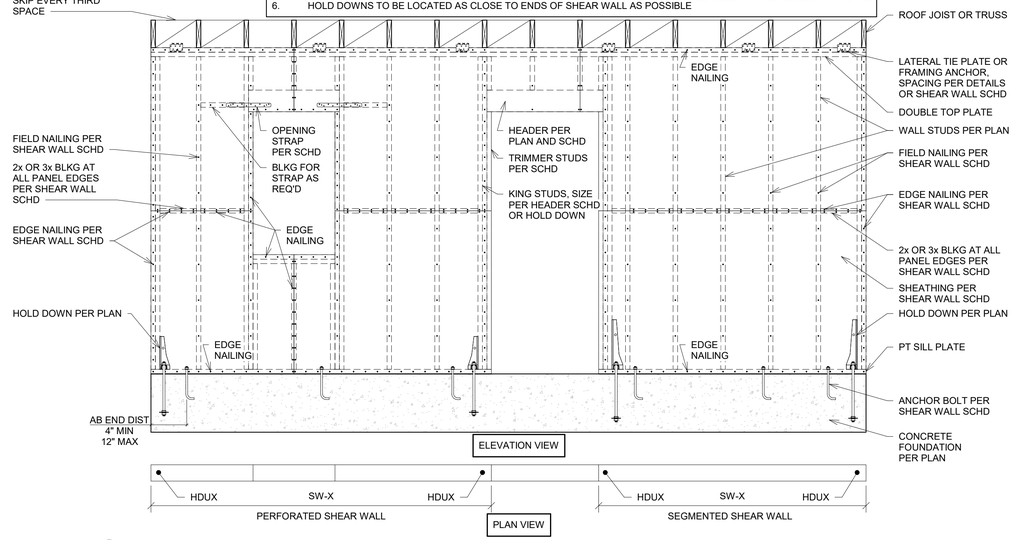

3 TYPICAL SHEAR WALL ELEVATION
1/2" = 1'-0"

SHEAR WALL SCHEDULE

MARK	SHEATHING THICKNESS	8d NAIL SPACING EDGES	8d NAIL SPACING FIELD	ANCHOR BOLT 5/8" DIA x 7" EMBED	LATERAL TIE PLATE	NOTES
SW-1	7/16"	6"	12"	@ 4' - 0" O.C.	LTP4 @32"	1, 2, 3, 4
SW-2	7/16"	6"	12"	@ 4' - 0" O.C.	LTP4 @24"	1, 2, 3, 4, 5

NOTES:
1. OSB OR PLYWOOD SHEATHING APPLIED TO ONE FACE OF STUD WALL. SHEATHING SHALL BE INSTALLED WITH THE LONG DIMENSION HORIZONTAL.
2. PLACE ANCHOR BOLTS WITHIN 12" OF THE ENDS OF THE WALL AND JOINTS/HOLES IN THE SILL PLATE.
3. SIMPSON HOLD DOWN PER PLAN WITH EPOXY EMBED THREADED ANCHOR ROD. EPOXY PER GSN'S.
4. SIMPSON HOLD DOWN TO BE ATTACHED TO POST SIZE AS NOTED ON PLAN. POST TO BE AS CLOSE TO END OF WALL AS PRACTICAL.
5. PROVIDE HORIZONTAL BLOCKING BETWEEN STUDS AT ALL PANEL EDGES WITH EDGE NAILING PER SCHEDULE.

HEADER SCHEDULE

MARK	SIZE	TRIMMER STUDS	KING STUDS	NOTES
H1	(2) 2x6 SPF	(1) 2x6 SPF	(1) 2x6 SPF	
H2	(2) 2x6 SPF	(1) 2x8 SPF	(1) 2x8 SPF	3
H3	(2) 2x6 SPF	(1) 2x8 SPF	(3) 2x8 SPF	1,2
H4	(3) 2x8 SPF	(1) 2x8 SPF	(1) 2x8 SPF	3
H5	(3) 2x8 SPF	(1) 2x8 SPF	(2) 2x8 SPF	1
H6	(3) 2x8 SPF	(1) 2x8 SPF	(3) 2x8 SPF	1, 2
H7	(3) 2x8 SPF	(1) 2x6 SPF	(1) 2x6 SPF	
H8	(3) 2x10 SPF	(1) 2x8 SPF	(4) 2x8 SPF	1, 2, 3
H9	(3) 2x12 SPF	(1) 2x6 SPF	(1) 2x6 SPF	
H10	(2) 1 3/4x11 7/8 1.9E LVL	(1) 2x8 SPF	(2) 2x8 SPF	1

NOTES:
1. STITCH NAIL MULTIPLE KING STUDS TOGETHER WITH (2) ROWS OF 10d NAILS @ 8" O.C. STAGGERED.
2. UPPER AND LOWER HEADERS STACKED DIRECTLY ABOVE EACH OTHER ON FULL-HEIGHT WALLS HAVE BEEN DESIGNED TO SHARE KING STUDS.
3. STEEL COLUMN SUBSTITUTES FOR KING STUDS WHERE APPLICABLE.
4. WHERE NO MARK IS NOTED ON PLAN, USE (2) 2x6 SPF HEADER FOR INTERIOR WALLS.

ENGINEERING CONSULTANTS, P.A.
1227 NORTH MAIN STREET
P.O. BOX 932
HUTCHINSON, KS 67504-0932
620.662.4474
www.engineering-consultants.com
info@engineering-consultants.com
ENGINEERING CONSULTANTS
EXPERIENCE & INTEGRITY

JonesGillamRenz
730 N. Ninth
Salina, KS 67401
785.827.0386
1881 Main Street, Suite 301
Kansas City, MO 64108
jgr@jgrarchitects.com

ROOTS COFFEE CO.
9805 S. YODER ROAD
YODER, KANSAS

BRANDON FUQUA LICENSED 24769 9/4/2024 KANSAS PROFESSIONAL ENGINEER

REVISION:

DATE: 9/4/24
JOB: 21-3168
SHEET NO.:
S4.0

COPYRIGHTED ©

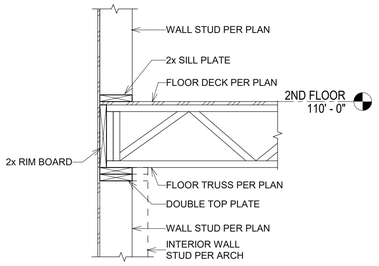

R1 Section R1
3/4" = 1'-0"

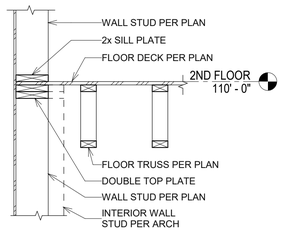

R2 Section R2
3/4" = 1'-0"

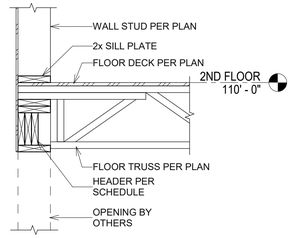

R3 Section R3
3/4" = 1'-0"

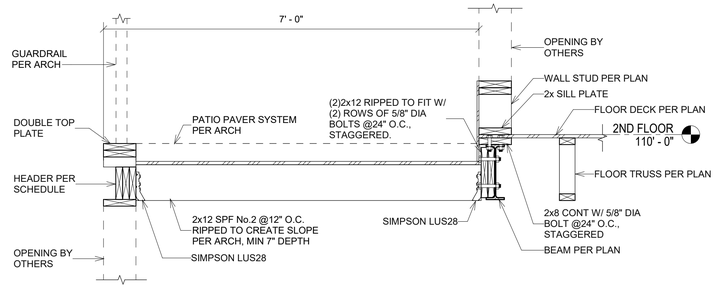

R4 Section R4
3/4" = 1'-0"

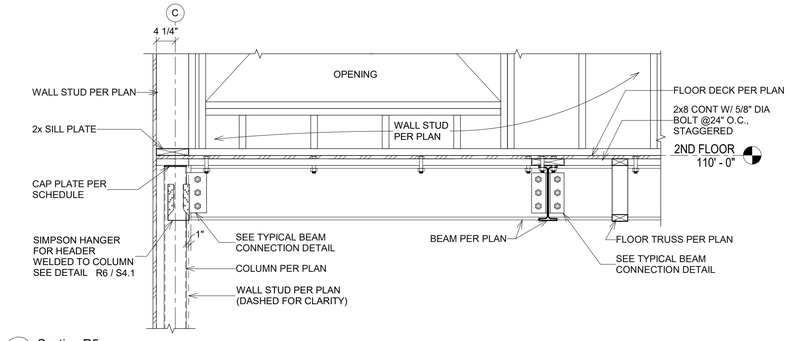

R5 Section R5
3/4" = 1'-0"

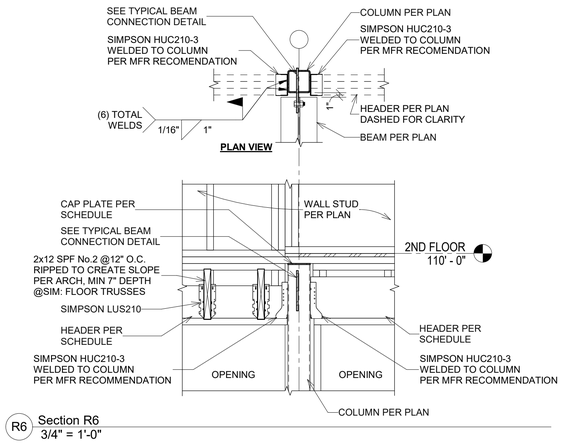

R6 Section R6
3/4" = 1'-0"

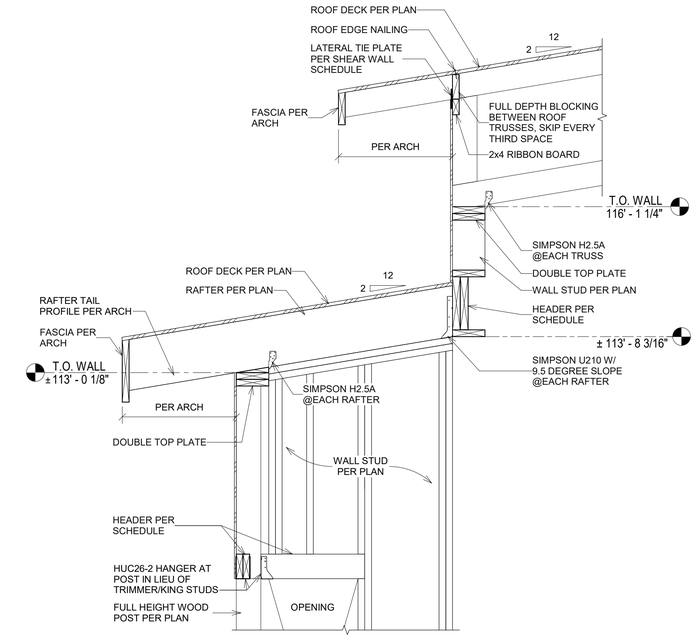

R7 Section R7
3/4" = 1'-0"

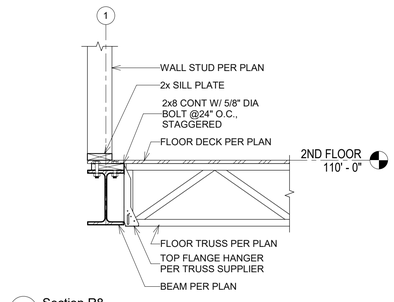

R8 Section R8
3/4" = 1'-0"

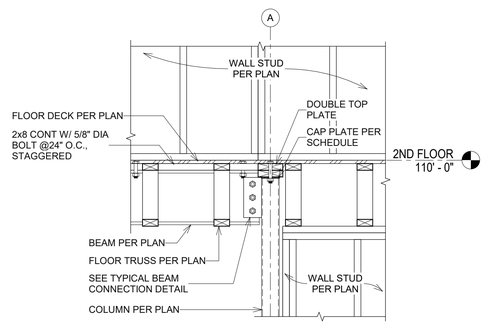

R9 Section R9
3/4" = 1'-0"

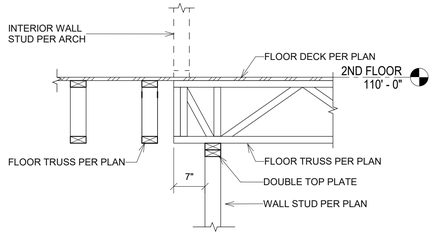

R10 Section R10
3/4" = 1'-0"

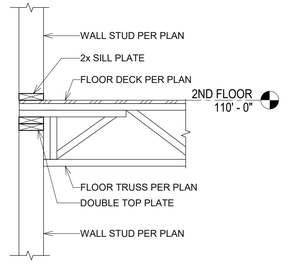

R11 Section R11
3/4" = 1'-0"

ENGINEERING CONSULTANTS, P.A.
1227 NORTH MAIN STREET
P.O. BOX 932
HUTCHINSON, KS 67504-0932
620-662-0404
www.engineering-consultants.com
info@engineering-consultants.com

JonesGillamRenz
730 N. Ninth
Salina, KS 67401
785.827.0386
1881 Main Street, Suite 301
Kansas City, MO 64108
jgr@jgrarchitects.com

ROOTS COFFEE CO.

9805 S. YODER ROAD

YODER, KANSAS

BRANDON FUQUA
LICENSED
24769
9/4/2024
KANSAS
PROFESSIONAL ENGINEER

REVISION:

DATE: 9/4/24
JOB: 21-3168
SHEET NO.:

S4.1

COPYRIGHTED ©

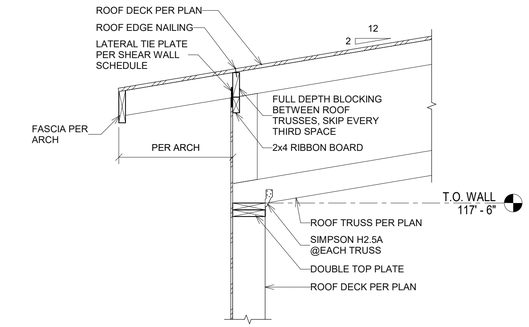

R12 Section R12
3/4" = 1'-0"

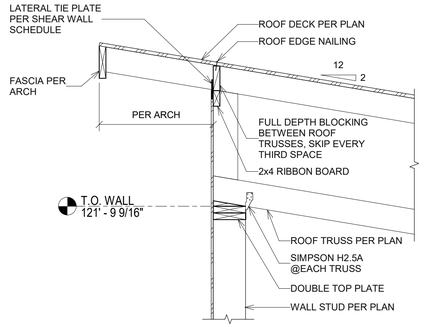

R13 Section R13
3/4" = 1'-0"

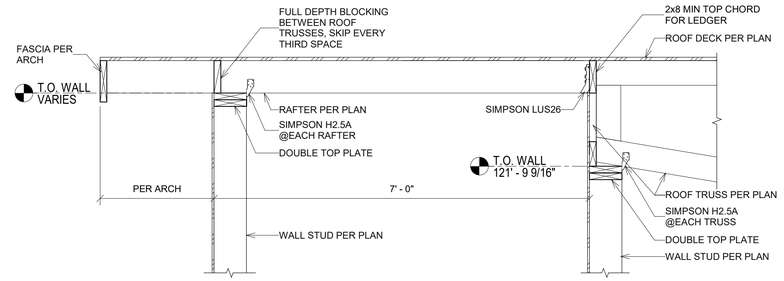

R14 Section R14
3/4" = 1'-0"

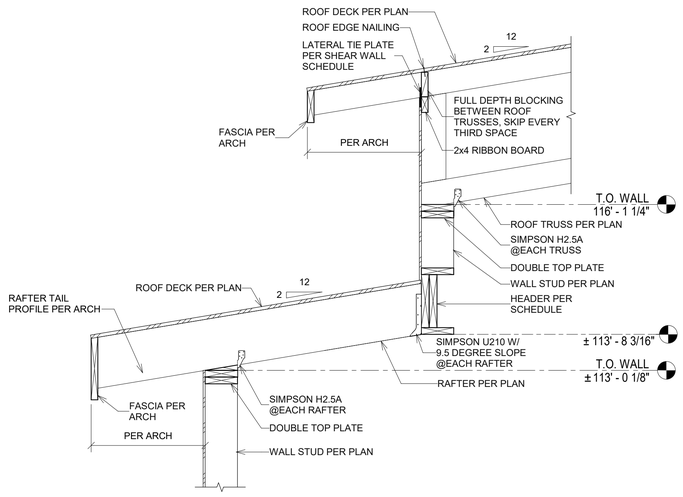

R15 Section R15
3/4" = 1'-0"

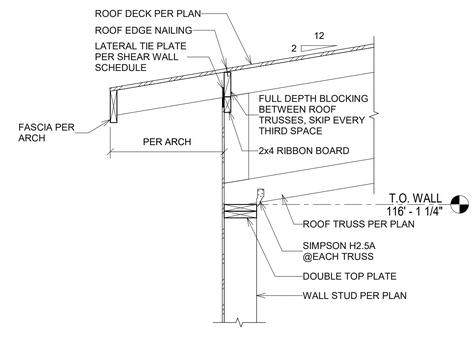

R16 Section R16
3/4" = 1'-0"

ENGINEERING CONSULTANTS, P.A.
1227 NORTH MAIN STREET
P.O. BOX 932
HUTCHINSON, KS 67504-0932
620-665-6394
www.engineering-consultants.com
info@engineering-consultants.com
ENGINEERING CONSULTANTS P.A.
EC PROJECT # 24-117

JonesGillamRenz
730 N. Ninth
Salina, KS 67401
785.827.0386
1881 Main Street, Suite 301
Kansas City, MO 64108
jgr@jgrarchitects.com

ROOTS COFFEE CO.

YODER, 9805 S. YODER ROAD KANSAS

BRANDON FUQUA LICENSED 24769 9/4/2024 KANSAS PROFESSIONAL ENGINEER

REVISION:

DATE: 9/4/24
JOB: 21-3168
SHEET NO.:

S4.2

COPYRIGHTED ©

LST Consulting Engineers, PA
MANHATTAN
4809 Vue Du Lac Place, Suite 201
Manhattan, KS 66503
785.587.8042
WICHITA
125 S. Washington, Suite 150
Wichita, KS 67202
316.265.0696
www.LSTengineers.com
mail@LSTengineers.com

Project 24042 **08-15-2024**

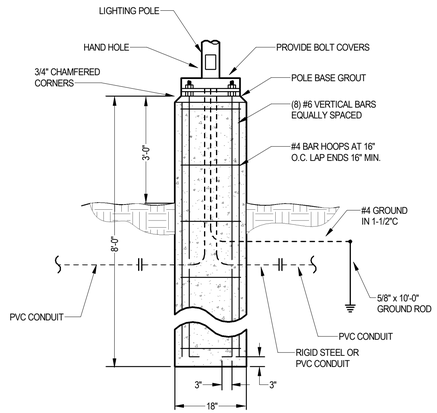

2 LIGHT POLE BASE DETAIL

Not to scale

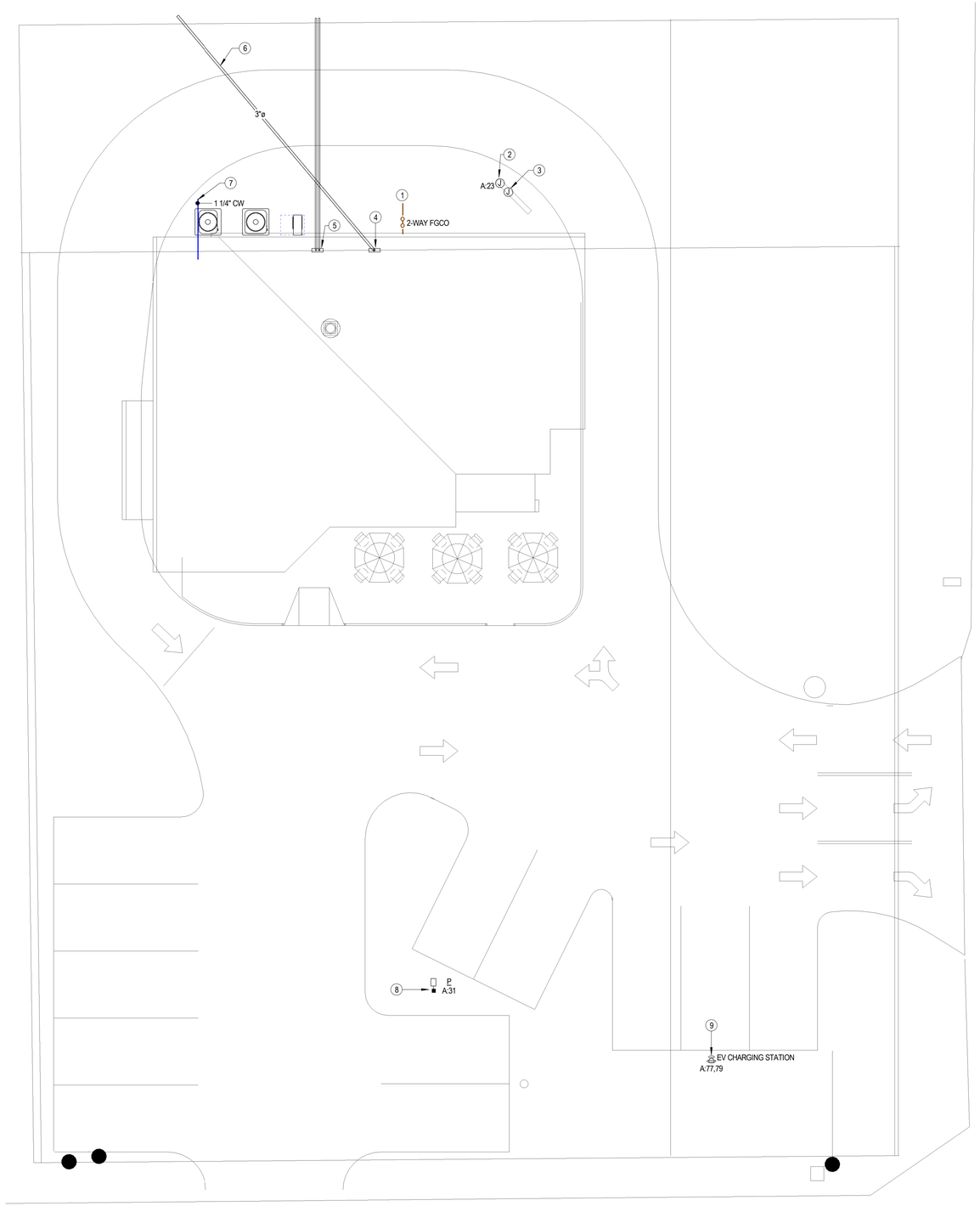

1 MECHANICAL/ELECTRICAL SITE PLAN

1/8" = 1'-0"

NOTES BY SYMBOL

1	EXTEND 4" BUILDING DRAIN TO CITY SANITARY SEWER. COORDINATE REQUIREMENTS WITH CITY AND PAY ASSOCIATED FEES. VERIFY FLOW LINES PRIOR TO INSTALLATION.
2	PROVIDE POWER FOR MENU BOARD/SIGNAGE. COORDINATE WITH OWNER.
3	PROVIDE EMPTY 1" CONDUIT TO BACKBOARD AT SECOND FLOOR FOR COMMUNICATIONS CABLE BY OTHERS. COORDINATE WITH OWNER.
4	METER BASE. COORDINATE WITH EVERGY.
5	PROVIDE 12"x12"x4" NEMA 3R JUNCTION BOX AT 12" ABOVE GRADE, WITH (2)2" CONDUITS TO PROPERTY LINE FOR TELECOM SERVICES BY OTHERS. PROVIDE (2)2" CONDUITS TO BACKBOARD AT SECOND FLOOR.
6	PROVIDE 3" CONDUIT 36" BELOW GRADE TO POWER POLE ON NORTH SIDE OF RED ROCK ROAD. BORE CONDUIT BELOW STREET. COORDINATE REQUIREMENTS WITH EVERGY AND PAY ASSOCIATED FEES.
7	EXTEND TO CITY WATER MAIN. COORDINATE TAP AND METER REQUIREMENTS WITH CITY AND PAY ASSOCIATED FEES.
8	PROVIDE POLE BASE FOR LIGHT POLE PER DETAIL THIS SHEET.
9	PROVIDE ELECTRIC VEHICLE CHARGING STATION AS DIRECTED BY OWNER. COORDINATE ELECTRICAL REQUIREMENTS WITH EQUIPMENT. INSTALL IN STRICT ACCORDANCE WITH MANUFACTURER'S INSTRUCTIONS.

JonesGillamRenz
730 N. Ninth
Salina, KS 67401
785.827.0386
1881 Main Street, Suite 301
Kansas City, MO 64108
jgr@jgrarchitects.com

ROOTS COFFEE CO.

9805 S. YODER ROAD

YODER, KANSAS

JOHN F. LEWIS-SMITH
14654
KANSAS
PROFESSIONAL ENGINEER

2024.08.21 10:04:52-05'00'

REVISIONS:

DATE: 08-15-2024
JOB: 21-3168
SHEET NO.:

ME1.1

COPYRIGHTED ©

General Plan Symbols

- Plan Revision Number
- Detail Number on Sheet / Sheet Number Where Detail is Placed
- Keynote Symbol
- Continuation Symbol
- Point Where New Connects To Existing
- Room / 1 — Room Name / Number
- Area Being Demolished
- Area Not In Contract

Abbreviations

Ø	ROUND	LVR	LOUVER
ABV	ABOVE	LWT	LEAVING WATER TEMPERATURE
AC	AIR CONDITIONING	M/A	MIXED AIR
AD	AREA DRAIN	MAX	MAXIMUM
ADD	ADDENDUM	MBH	ONE THOUSAND BTU PER HOUR
AFF	ABOVE FINISHED FLOOR	MCF	ONE THOUSAND CUBIC FEET
AFUE	ANNUAL FUEL UTILIZATION EFFICIENCY	MD	MOTORIZED DAMPER
ALT	ALTERNATE	MECH	MECHANICAL
AP	ACCESS PANEL	MFR	MANUFACTURER
ARCH	ARCHITECT/ARCHITECTURAL	MIN	MINIMUM
BFF	BELOW FINISHED FLOOR	MISC	MISCELLANEOUS
BLW	BELOW	MTR	MOTOR
BTU	BRITISH THERMAL UNITS	MU/A	MAKE-UP/AIR
BTUH	BRITISH THERMAL UNITS PER HOUR	NC	NOISE CRITERIA
CAP	CAPACITY	NC	NORMALLY CLOSED
CB	CATCH BASIN	NIC	NOT IN CONTRACT
CFM	CUBIC FEET PER MINUTE	NO	NUMBER
CLG	CEILING	NO	NORMALLY OPEN
CO	CLEAN OUT	NTS	NOT TO SCALE
CW	COLD WATER	O	OXYGEN
D	DEGREE	O/A	OUTSIDE AIR
DB	DRY BULB	ORD	OVERFLOW ROOF DRAIN
DIA	DIAMETER	PD	PRESSURE DROP
DN	DOWN	PIV	POST INDICATOR VALVE
DW	DISTILLED WATER	PLBG	PLUMBING
EA	EACH	PRESS	PRESSURE
EAT	ENTERING AIR TEMPERATURE	PRV	PRESSURE REDUCING VALVE
ELEC	ELECTRICAL	PSI	POUNDS PER SQUARE INCH
EQUIP	EQUIPMENT	PSIG	POUNDS PER SQUARE INCH GAUGE
EWC	ELECTRIC WATER COOLER	PWR	POWER
EWT	ENTERING WATER TEMPERATURE	R	DUCT RISER
E/A	EXHAUST AIR	R/A	RETURN AIR
EXIST	EXISTING	RCP	RADIANT CEILING PANEL
F	DEGREES FAHRENHEIT	RD	ROOF DRAIN
FCO	FLOOR CLEAN OUT	REC	RECESSED
FD	FLOOR DRAIN	RED	REDUCER
FDC	FIRE DEPARTMENT CONNECTION	RH	RELATIVE HUMIDITY
FL	FLOOR	RL/A	RELIEF AIR
FO	FUEL OIL	RM	ROOM
FOV	FUEL OIL VENT	RPM	REVOLUTIONS PER MINUTE
FOR	FUEL OIL RETURN	RW	RAIN WATER
FOS	FUEL OIL SUPPLY	SF	SQUARE FOOT
FPM	FEET PER MINUTE	S/A	SUPPLY AIR
FS	FLOOR SINK	SAN	SANITARY
FT	FOOT/FEET	SF	SQUARE FOOT
FTR	FIN TUBE RADIATION	SD	SMOKE DAMPER
GAL	GALLON	SM	SURFACE MOUNT
GF	GAS-FIRED	SP	STANDPIPE
GC	GENERAL CONTRACTOR	SP	STATIC PRESSURE
GPM	GALLONS PER MINUTE	STM	STEAM
GW	GREASE WASTE	T	THERMOSTAT
HB	HOSE BIB	TD	TEMPERATURE DROP
HP	HORSE POWER	TDR	TRENCH DRAIN
HTG	HEATING	TEMP	TEMPERATURE
HTR	HEATER	TYP	TYPICAL
HW	HOT WATER	UG	UNDERGROUND
HYD	HYDRANT	VAC	VACUUM
ID	INDIRECT	V	VENT
IN	INCH	VAV	VARIABLE AIR VOLUME
INV	INVERT	VENT	VENTILATION
LB	POUND	VTR	VENT THROUGH ROOF
LB/HR	POUNDS PER HOUR	W	WASTE
LAT	LEAVING AIR TEMPERATURE	WB	WET BULB
LP	LOW PRESSURE	WCO	WALL CLEAN OUT
LPG	LIQUEFIED PETROLEUM GAS	WH	WALL HYDRANT

Equipment Abbreviations

AC	AIR CONDITIONING UNIT	ET	EXPANSION TANK
ACCU	AIR COOLING CONDENSING UNIT	EWH	ELECTRIC WATER HEATER
AHU	AIR HANDLING UNIT	FCU	FAN COIL UNIT
AS	AIR SEPARATOR	FP	FIRE PUMP
B	BOILER	GI	GREASE INTERCEPTOR
CH	CHILLER	GRV	GRAVITY ROOF VENTILATOR
CT	COOLING TOWER	HWP	HEATING WATER PUMP
CUH	CABINET UNIT HEATER	HRU	HEAT RECOVERY UNIT
CHWP	CHILLED WATER PUMP	PRV	POWER ROOF VENTILATOR
DBP	DOMESTIC WATER BOOSTER PUMP	RE	RETURN/EXHAUST FAN
DC	DUCT MOUNTED COIL	RTU	ROOFTOP UNIT
DCP	DOMESTIC WATER CIRCULATING PUMP	SP	SUMP PUMP
EF	EXHAUST FAN	UH	UNIT HEATER
EDC	ELECTRIC DUCT COIL	WH	WATER HEATER

* NOTE *

ALL OF GENERAL NOTES ON THIS SHEET ARE TO BE APPLIED TO ALL OTHER DRAWINGS IN THIS SET.THE SYMBOLS AND ABBREVIATIONS SHOWN ON THIS SHEET MAY OR MAY NOT BE USED IN THIS SET OF DRAWINGS.

HVAC Symbols

- 24"/12" — Sq. Duct Size (Width/Height)
- 24"x12"FO — Oval Duct Size (Width x Height)
- 18"Ø — Round Duct Size (Diameter)
- (E) — Existing Duct To Remain
- Duct To Be Demolished
- S/A — Supply Air
- V/A — Ventilation Air
- O/A — Outdoor Air
- R/A — Return Air
- T/A — Transfer Air
- E/A — General Exhaust Air
- KED — Kitchen Exhaust Duct
- FLUE — Flue Gas Vent
- C/A — Combustion Air
- Rect. Supply Duct Rise / Drop
- Round Supply Duct Rise / Drop
- Rect. Return Duct Rise / Drop
- Round Return Duct Rise / Drop
- Rect. Exhaust Duct Rise / Drop
- Round Exhaust Duct Rise / Drop

Grille, Register, Diffusers

Square Ceiling Diffuser — CD3 | 500 | 10"Ø/24x24 — Type (See Schedule) / Airflow / Neck Size / Module Size

Round Ceiling Diffuser — CD11 | 100 | 6"Ø | TYP. X 4 — Type (See Schedule) / Airflow / Neck Size / Type Count for Space

Sidewall Supply Grille — SG1 | 500 | 18"/10" | AFF-9'-0" — Type (See Schedule) / Airflow / Nominal Duct Size / Mounting Elevation (Centerline)

Linear Diffuser — LD8 | 200 | 8"Ø/2s/4'-0"L — Type (See Schedule) / Airflow / Neck Size/ Slot(s)/ Active Length

Sidewall Return Grille — RG1 | 800 | 16"/16" | AFF-9'-0" — Type (See Schedule) / Airflow / Nominal Duct Size / Mounting Elevation (Centerline)

Ceiling Return — RG2 | 500 | 12"/12"/24x24 | 25 — Type (See Schedule) / Airflow / Neck Size / Module Size / Max NC Rating

Mechanical Equipment

- RTU-1 / 10.0 ton — Unit Identity / Nominal Cooling Capacity
- RTU-1 / 180000 Btu/h / 180 CFH — Heating Capacity / Gas Supply Input Rate
- ET-1 / 379 lb — Operating Weight
- EF-XX / 500 CFM — Design Airflow Rate
- VAV 1-2 / 3.7 GPM — Design Water Flow
- AC-1 / AFF:7'-0" — Bottom of Equipment Height
- (E)AHU-2 — Existing to Remain Equipment
- (R)AHU-3 — Existing Relocated Equipment
- Equipment By Others (Refer To Other Disciplines)

Damper Types

- Manual Damper
- Motorized Damper
- Backdraft Damper
- Smoke Damper
- Fire Damper
- Comb. Fire/ Smoke Damper

Mechanical Piping Symbols

- 2" — Nominal Pipe Size
- Above Ground Piping
- Below Ground Piping
- 1/8" / 12" SLOPE — Pipe Slope (When Applicable)
- (E) — Existing Pipe To Remain
- Pipe To Be Demolished
- CHWR — Chilled-Water Return
- CHWS — Chilled-Water Supply
- CD — Condensate Drain
- CWR — Condenser-Water Return
- CWS — Condenser-Water Supply
- GWR — Geothermal-Water Return
- GWS — Geothermal-Water Supply
- HWR — Hot-Water Return
- HWS — Hot-Water Supply
- G — Natural Gas
- LP — Liquid Propane
- RL — Refrigerant Liquid
- RS — Refrigerant Gas
- RD — Refrigerant Discharge
- STM — Steam Supply
- CDR — Steam Condensate Return
- Pipe Rise / Drop

Valve Types

- 2" SHUTOFF — Ball Valve
- 2" BAL — Balancing Valve
- 2" BFV — Butterfly Valve
- 2" CHECK — Check Valve
- 2" CHECK — Alternate Check Valve
- 3" CIRC — Circuit Setter
- 2" GATE — Gate Valve
- 2" GLOBE — Globe Valve
- 2" LOCK — Locked Shield Valve
- 2" PRV — Pressure Reducing Valve
- 2" QUICK — Quick Opening Valve
- 2" STRAIN — Fluid Strainer
- 2" M-CNTRL — Elec. Control Valve
- 4" 3-WAY CNTRL — 3-Way Elec. Valve
- 1" GAS-CNTRL — Emergency Gas Shutoff
- 1" PLUG — Plug Valve
- 1" GAS COCK — Gas Shutoff Cock
- 1" REG — Gas Regulator

Mechanical Control Devices

- AHU-1 — Unit Identity
- TS — Temperature Sensor
- TH — Temp/ Humidity Sensor
- TC — Temp/ CO2 Sensor
- T — Thermostat
- H — Humidistat
- HS — Humidity Sensor
- CO2 — Carbon Dioxide Detector
- CO — Carbon Monoxide Detector
- H2 — Hydrogen Gas Detector
- HZG — Hazardous Gas Detector
- NO2 — Nitrogen Dioxide Detector
- O2 — Oxygen Gas Detector

HVAC General Notes

A. CONTRACTOR SHALL LOCATE THERMOSTATS AND TEMPERATURE SENSORS AT 4'-0" AFF, A MINIMUM OF 8" FROM LIGHT SWITCH.

B. REFER TO HVAC DRAWINGS FOR THERMOSTAT AND TEMPERATURE SENSOR LOCATIONS.

C. CONDENSATE DRAINS SHALL BE SUPPLIED FOR ALL COOLING EQUIPMENT. CONTRACTOR SHALL ENSURE PROPER INSTALLATION AND DRAINAGE AS REQUIRED BY FEDERAL, STATE, AND LOCAL CODES. CONDENSATE PIPING SHALL BE TYPE "L" COPPER.

D. ALL SUPPLY, RETURN, AND EXHAUST DUCTWORK SHALL BE RATED FOR PRESSURE CLASS OF 2" W.G. UNLESS NOTED OTHERWISE.

E. COORDINATE THE EXACT LOCATION OF ALL CEILING DIFFUSERS, REGISTERS, AND GRILLES WITH NEW AND EXISTING LIGHTING.

F. PROVIDE A 4" HOUSEKEEPING PAD FOR EACH PIECE OF MECHANICAL EQUIPMENT. COORDINATE SIZES WITH MECHANICAL EQUIPMENT SELECTED.

G. THIS CONTRACTOR SHALL BE REQUIRED TO REPLACE FILTERS ON HVAC EQUIPMENT AFTER ALL DUST PRODUCING CONSTRUCTION HAS BEEN COMPLETED AND PRIOR TO THE FINAL PUNCH.

H. PROVIDE DIFFUSERS AND REGISTERS WITH 4-WAY BLOW PATTERN UNLESS OTHERWISE NOTED.

Project Requirements

A. COORDINATE INSTALLATION OF PIPING, DUCTWORK, CONDUIT, LIGHTS, CABLE TRAY, STRUCTURE, AND EQUIPMENT TO PREVENT CONFLICTS.

B. FINAL PRODUCT SHALL BE A COMPLETE AND FUNCTIONING SYSTEM, AND SHALL CONFORM TO ALL REQUIREMENTS OF APPLICABLE FEDERAL, STATE, AND LOCAL CODES, INCLUDING BUT NOT LIMITED TO THE INTERNATIONAL BUILDING CODE AND INTERNATIONAL MECHANICAL CODE.

C. LOCATE DUCTWORK, PIPING AND MECHANICAL EQUIPMENT AWAY FROM THE SPACE ABOVE ELECTRICAL PANELS. TRANSFORMERS AND OTHER ELECTRICAL EQUIPMENT.

D. PROVIDE SLEEVES AND/OR OPENINGS TO RUN PIPES AND DUCTS THROUGH FOUNDATIONS, FLOORS, WALLS, AND ROOF.

E. MAINTAIN CLEAR ACCESS TO SERVICE EQUIPMENT AND OTHER ACCESSORIES REQUIRING SERVICE, VISUAL INSPECTION OR HAND OPERATION. WHERE INDICATED OR REQUIRED, PROVIDE ACCESS PANELS OF THE TYPE SELECTED TO SUIT MATERIALS IN WHICH INSTALLED.

F. ADJUST PIPING AND DUCTWORK SIZES TO PROPERLY CONNECT TO MECHANICAL EQUIPMENT.

G. PIPE SIZES SHOWN SHALL BE CONTINUED IN THE DIRECTION OF FLOW UNTIL ANOTHER SIZE IS SHOWN.

H. FOR DETAILS, EQUIPMENT CONNECTIONS, AND PIPE SIZES NOT SHOWN ON THE SEGMENTS, REFER TO DETAILS, SCHEDULES, AND SPECIFICATIONS.

I. INSTALL ALL EQUIPMENT IN ACCORDANCE WITH THE RESPECTIVE MANUFACTURER'S WRITTEN INSTALLATION INSTRUCTIONS, AT A LEVEL OF QUALITY AND WORKMANSHIP CONSISTENT WITH THE SPECIFICATIONS.

J. LOCATIONS OF PIPING, DUCTWORK AND EQUIPMENT AS INDICATED ON THE DRAWING, ARE APPROXIMATE AND SUBJECT TO MINOR ADJUSTMENTS IN THE FIELD. WORK SHALL BE COORDINATED WITH ALL OTHER TRADES TO AVOID INTERFERENCE IN THE FIELD.

K. INSTALL EXPOSED PIPING AND DUCTWORK AS HIGH AS PRACTICAL IN ROOMS WITHOUT CEILINGS.

L. THE CONTRACTOR'S WORK SCHEDULE SHALL BE SUBMITTED TO AND APPROVED BY THE OWNER.

M. PRIOR TO STARTING WORK, SUBMIT SHOP DRAWINGS FOR ALL MECHANICAL EQUIPMENT, PLUMBING FIXTURES, AND DIFFUSERS.

N. CONTRACTOR SHALL OBTAIN AND PAY FOR ALL NECESSARY PERMITS AND SHALL ARRANGE FOR ALL INSPECTIONS AS REQUIRED.

O. PROVIDE ONE YEAR WARRANTY FOR ALL WORKMANSHIP AND MATERIALS AFTER THE DATE OF FINAL ACCEPTANCE.

Exhaust Fan Schedule

Identity	Manufacturer	Model	Fan Design: Capacity	Fan Design: ESP	Motor: FLA	Electrical: Voltage	Electrical: Phase
EF-1	Greenheck	SP-110-VG	50 CFM	0.25 in-wg	1.1 A	120 V	1
EF-2	Greenheck	SP-110-VG	50 CFM	0.25 in-wg	1.1 A	120 V	1

NOTES:
1. PROVIDE FACTORY MOUNTED AND WIRED DISCONNECT SWITCH.
2. PROVIDE WITH GRAVITY BACKDRAFT DAMPER.
3. PROVIDE WITH SPEED CONTROLLER MOUNTED TO MOTOR.

Grilles, Registers & Diffusers Schedule

ID Type	Manufacturer	Model	Type	Material	Finish	Installation	Border Application
	Greenheck Fan Corp.	ESD-435					
CD3	Titus	TMS-AA	Square Cone	Aluminum	White Enamel	Ceiling	Lay-In Full Face
RG2	Titus	50F	Eggcrate Return	Aluminum	Mill	Ceiling	Surface Mount
RG6	Titus	350FL	Louvered Return	Aluminum	Mill	Ceiling	Surface Mount
SG1	Titus	S300FL	Spiral Grille	Aluminum	Mill	Suspended	Duct Mount Frame
SG5	Titus	300F	Louvered Grille	Aluminum	Mill	Wall Mount	Surface Mount

GENERAL:
- PROVIDE MOUNTING FRAME AS REQUIRED FOR CEILING TYPE.
- MAXIMUM NC SHALL BE 30.
- RUNOUTS TO DIFFUSERS SHALL BE SAME SIZE AS NECK, U.N.O.
- CEILING DEVICES SHALL HAVE ADJUSABLE BLOW PATTERN, 4-WAY U.N.O.
- COORDINATE LOCATIONS OF ALL WALL DEVICES WITH ARCHITECT.

Outdoor Split System Schedule

Identity	Installed Location	Manufacturer	Model	Nominal Capacity	System is Heat Pump	Electrical: Voltage	Electrical: Phase	MCA	MOCP	Notes
HP-1	Grade	Trane	4TWR6060N1	5.00 ton	Yes	240 V	1	35.0 A	60.0 A	1,2,6
HP-2	Grade	Trane	4TWR6024N1	2.00 ton	Yes	240 V	1	15.0 A	25.0 A	1,2,6
HP-3	Grade	Mitsubishi	PUZ-HA24NHA1	2.00 ton	Yes	240 V	1	17.0 A	25.0 A	1,2,3,4,5,6

NOTES:
1. PROVIDE REFRIGERANT PIPING SIZED IN ACCORDANCE WITH MANUFACUTER'S RECOMMENDATIONS FOR ACTUAL FIELD INSTALLED LENGTH AND ROUTING.
2. PROVIDE WITH R410-A REFRIGERANT.
3. UNIT POWERS MATCHING INDOOR UNIT.
4. INSTALL UNIT ON RAILS TO KEEP UNIT 18" ABOVE PAD.
5. UTILIZE LINE-HIDE KIT TO CONCEAL REFRIGERANT PIPING AND CONDENSATE PIPING ON EXTERIOR WALL.
6. PROVIDE WITH HAIL GUARDS.

Indoor Split System Schedule

Identity	Manufacturer	Model	Nominal Capacity	Airflow	ESP	Supply Fan HP	Rated Cooling Capacity	Cooling Capacity: Total	Cooling Capacity: Sensible	Heat Pump Heating Capacity	No. Circuits	Electric Heat Minimum	Electric Heat Maximum	Electrical: Voltage	Electrical: Phase	MOCP	MCA	Notes
BC-1	Trane	TEM6B0C60H51	5.0 ton	1,900 CFM	0.50 in-wg	0.75 hp	56,420 Btu/h	56,420 Btu/h	41,751 Btu/h	36,553 Btu/h	2	9.6 kW	19.2 kW	240 V	1	60.0 A	59.0 A	1, 4
BC-2	Trane	TEM6A0B30H21	2.0 ton	900 CFM	0.50 in-wg	0.50 hp	24,888 Btu/h	24,888 Btu/h	19,910 Btu/h	15,655 Btu/h	1	0.0 kW	9.6 kW	240 V	1	60.0 A	55.0 A	2, 4
IU-1	Mitsubishi	PKA-A24KA7	2.0 ton	700 CFM			24,000 Btu/h	24,000 Btu/h	19,200 Btu/h	26,000 Btu/h				240 V	1	0.0 A	0.0 A	3, 4

1. UNIT SHALL HAVE (2) ELECTRICAL CONNECTIONS. PRIMARY CONNECTION SHALL INCLUDE ELECTRIC HEAT AND FAN MOTOR. COORDINATE WITH ELECTRICAL CONTRACTOR.
2. UNIT SHALL HAVE SINGLE POINT ELECTRICAL CONNECTION.
3. UNIT SHALL BE POWERED FROM OUTDOOR UNIT.
4. PROVIDE WIRED PROGRAMMABLE THERMOSTAT.

LST Consulting Engineers, PA
MANHATTAN: 4809 Vue Du Lac Place, Suite 201, Manhattan, KS 66503, 785.587.8042
WICHITA: 125 S. Washington, Suite 150, Wichita, KS 67202, 316.265.0696
www.LSTengineers.com
mail@LSTengineers.com

Project 24042 — 08-15-2024

HVAC SHEET INDEX

M0.1 HVAC Title Sheet
M1.1 HVAC Plans

JonesGillamRenz
730 N. Ninth, Salina, KS 67401, 785.827.0366
1881 Main Street, Suite 301, Kansas City, MO 64108, jgr@jgrarchitects.com

ROOTS COFFEE CO.
9805 S. YODER ROAD
YODER, KANSAS

JOHN F. LEWIS-SMITH, 14654, KANSAS, PROFESSIONAL ENGINEER

2024.08.21 10:05:16-05'00'

REVISIONS:

DATE: 08-15-2024
JOB: 21-3168
SHEET NO.: M0.1

COPYRIGHTED ©

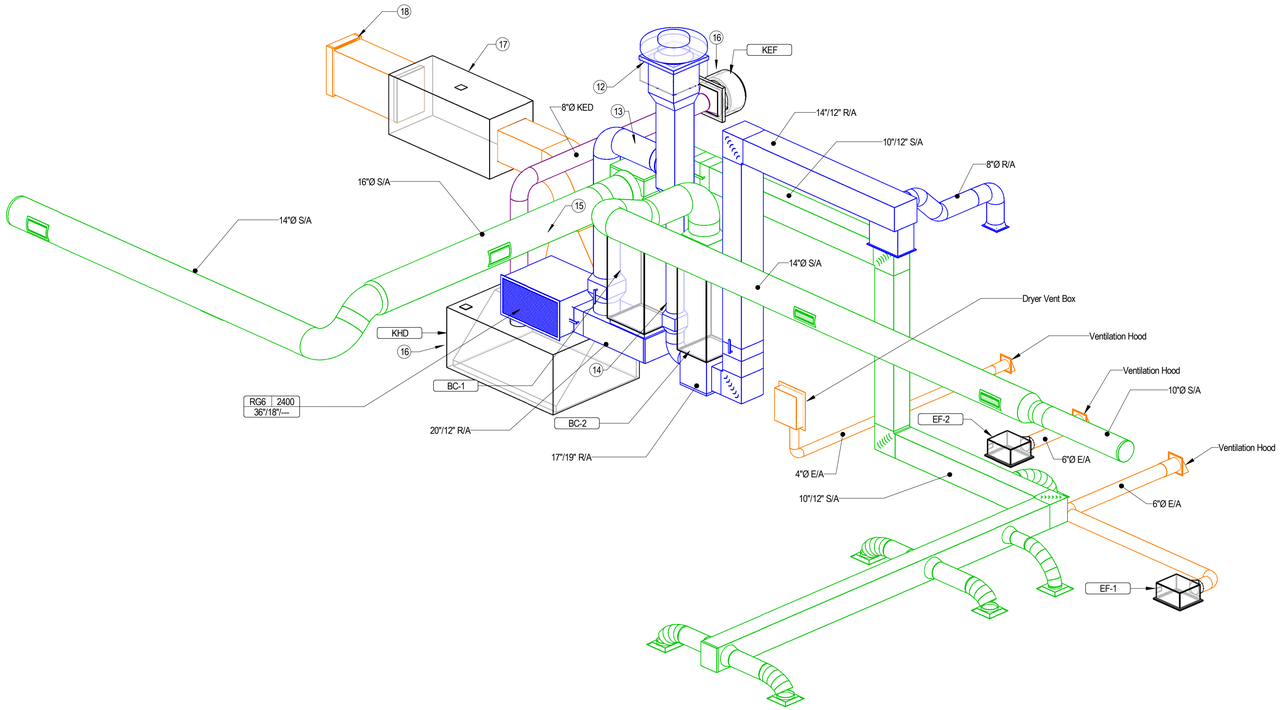

3 DUCTWORK RISER DIAGRAM

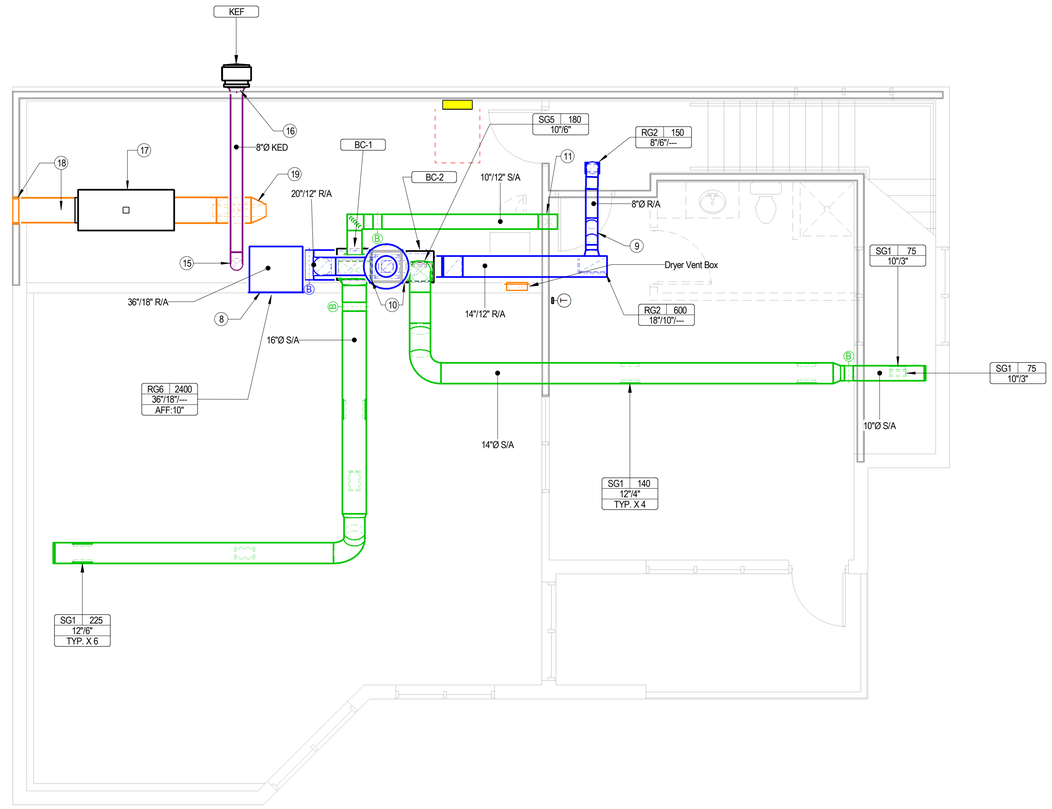

2 SECOND FLOOR HVAC PLAN

1/4" = 1'-0"

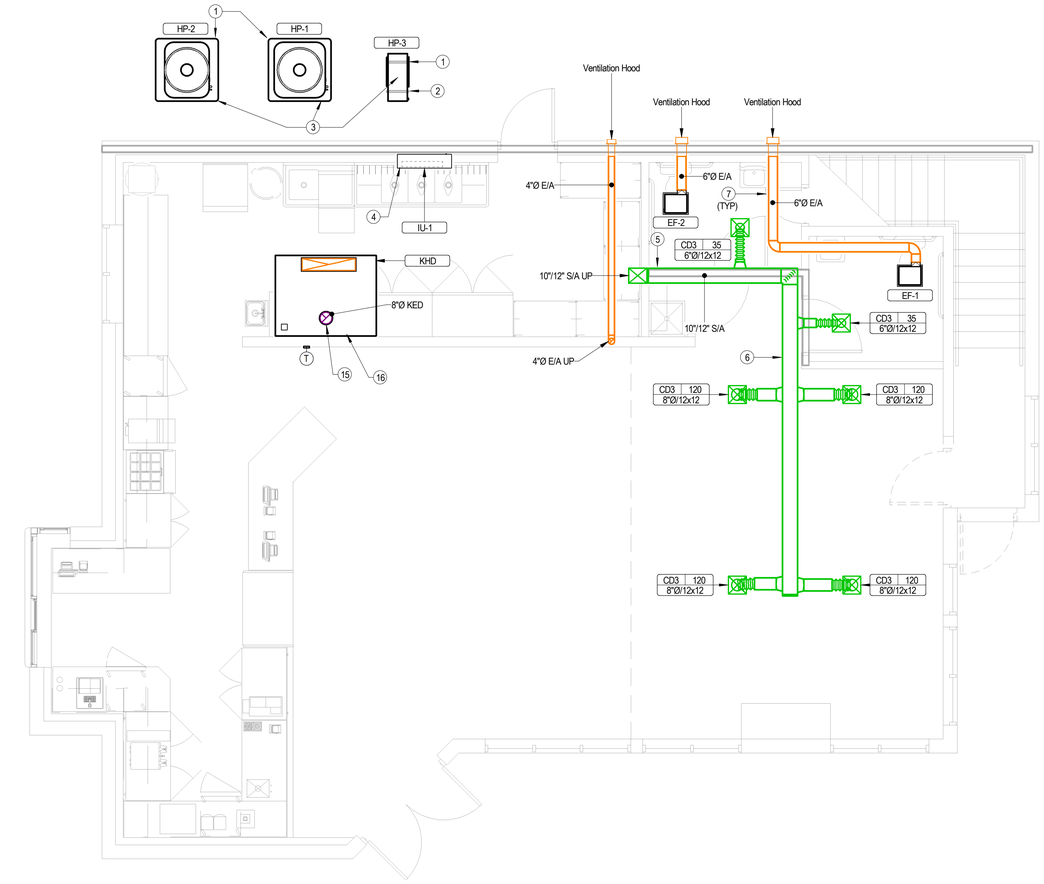

1 FIRST FLOOR HVAC PLAN

1/4" = 1'-0"

NOTES BY SYMBOL

1	INSTALL HEAT PUMP ON CONCRETE PAD. COORDINATE WITH G.C.
2	PROVIDE SUPPORT RAILS EQUIVALENT TO QUICK SLING, TO HOLD HEAT PUMP 18" OFF OF CONCRETE PAD.
3	ROUTE REFRIGERANT PIPING BETWEEN OUTDOOR UNITS AND INDOOR UNITS IN ACCORDANCE WITH MANUFACTURER'S DIRECTIONS. PENETRATE EXTERIOR WALL AT 18" ABOVE GRADE. UTILIZE MANUFACTURED WALL PENETRATION EQUIVALENT TO AIREX "TITAN".
4	COORDINATE INSTALLATION OF REFRIGERANT AND DRAIN PIPING WITH EQUIPMENT PROVIDED. DO NOT ROUTE PIPING EXPOSED IN KITCHEN.
5	ROUTE DUCT BETWEEN TRUSSES. COORDINATE WITH STRUCTURAL.
6	ROUTE DUCTWORK THROUGH FRAMED OPENINGS IN FLOOR TRUSSES. COORDINATE WITH STRUCTURAL.
7	ROUTE BRANCH DUCTS THROUGH OPENINGS IN FLOOR TRUSSES, COORDINATE WITH STRUCTURAL.
8	COORDINATE FINAL LOCATION OF RETURN GRILLE WITH OWNER.
9	COORDINATE ROUTING OF RETURN DUCT WITH STRUCTURAL.
10	ROUTE 3/4" CONDENSATE DRAIN FROM EVAPORATOR COILS TO SERVICE SINK AT FIRST FLOOR.
11	ROUTE DUCT VERTICALLY IN CHASE, COORDINATE WITH ARCHITECT AND STRUCTURAL.
12	PROVIDE 12" X 12" UP TO GREENHECK MODEL 'GI' GRAVITY INLET. PROVIDE INSULATED ROOF CURB COMPATIBLE WITH ROOF SLOPE AND CONSTRUCTION.
13	PROVIDE 12" OUTSIDE AIR DUCT AND CONNECT TO INLET AT BLOWER COIL BC-1. BALANCE TO 300 CFM.
14	PROVIDE 8" OUTSIDE AIR DUCT AND CONNECT TO INLET AT BLOWER COIL BC-2. BALANCE TO 200 CFM.
15	CONNECT EXHAUST DUCT TO KITCHEN HOOD AND ROUTE TO EXHAUST FAN. UTILIZE DOUBLE WALLED KITCHEN EXHAUST DUCT RATED FOR ZERO CLEARANCE TO COMBUSTIBLES, COORDINATE WITH KITCHEN EQUIPMENT SUPPLIER.
16	INSTALL KITCHEN HOOD AND FAN SUPPLIED BY OTHERS. COORDINATE WITH EQUIPMENT SUPPLIER.
17	INSTALL KITCHEN HOOD MAKEUP AIR UNIT. COORDINATE FINAL LOCATION WITH OWNER. COORDINATE REQUIREMENTS WITH EQUIPMENT SUPPLIED.
18	PROVIDE 24"W X 18"H INTAKE LOUVER, GREENHECK ESD-435 OR EQUIVALENT AND TRANSITION TO INLET AT MAKEUP AIR UNIT. COORDINATE WITH MAKEUP AIR EQUIPMENT.
19	TRANSITION AS REQUIRED TO MAKEUP AIR CONNECTION AT HOOD. COORDINATE WITH STRUCTURE AND HOOD.

LST Consulting Engineers, PA
MANHATTAN
4809 Vue Du Lac Place, Suite 201
Manhattan, KS 66503
785.587.8042
WICHITA
125 S. Washington, Suite 150
Wichita, KS 67202
316.265.0696
www.LSTengineers.com
mail@LSTengineers.com

Project 24042 08-15-2024

JonesGillamRenz
730 N. Ninth
Salina, KS 67401
785.827.0386
1881 Main Street, Suite 301
Kansas City, MO 64108
jgr@jgrarchitects.com

ROOTS COFFEE CO.
9805 S. YODER ROAD
YODER, KANSAS

JOHN F. LEWIS-SMITH
LICENSED
14654
KANSAS
PROFESSIONAL ENGINEER
2024.08.21 10:05:40-05'00'

REVISIONS:

DATE: 08-15-2024
JOB: 21-3168
SHEET NO.:

M1.1

COPYRIGHTED ©

General Plan Symbols

- Plan Revision Number
- Detail Number on Sheet / Sheet Number Where Detail is Placed
- Keynote Symbol
- Continuation Symbol
- Point Where New Connects To Existing
- Room / Room Number
- Area Being Demolished
- Area Not In Contract

Abbreviations

Ø	ROUND	LVR	LOUVER
ABV	ABOVE	LWT	LEAVING WATER TEMPERATURE
AC	AIR CONDITIONING	M/A	MIXED AIR
AD	AREA DRAIN	MAX	MAXIMUM
ADD	ADDENDUM	MBH	ONE THOUSAND BTU PER HOUR
AFF	ABOVE FINISHED FLOOR	MCF	ONE THOUSAND CUBIC FEET
AFUE	ANNUAL FUEL UTILIZATION EFFICIENCY	MD	MOTORIZED DAMPER
ALT	ALTERNATE	MECH	MECHANICAL
AP	ACCESS PANEL	MFR	MANUFACTURER
ARCH	ARCHITECT/ARCHITECTURAL	MIN	MINIMUM
BFF	BELOW FINISHED FLOOR	MISC	MISCELLANEOUS
BLW	BELOW	MTR	MOTOR
BTU	BRITISH THERMAL UNITS	MU/A	MAKE-UP/AIR
BTUH	BRITISH THERMAL UNITS PER HOUR	NC	NOISE CRITERIA
CAP	CAPACITY	NC	NORMALLY CLOSED
CB	CATCH BASIN	NIC	NOT IN CONTRACT
CFM	CUBIC FEET PER MINUTE	NO	NUMBER
CLG	CEILING	NO	NORMALLY OPEN
CO	CLEAN OUT	NTS	NOT TO SCALE
CW	COLD WATER	O	OXYGEN
D	DEGREE	O/A	OUTSIDE AIR
DB	DRY BULB	ORD	OVERFLOW ROOF DRAIN
DIA	DIAMETER	PD	PRESSURE DROP
DN	DOWN	PIV	POST INDICATOR VALVE
DW	DISTILLED WATER	PLBG	PLUMBING
EA	EACH	PRESS	PRESSURE
EAT	ENTERING AIR TEMPERATURE	PRV	PRESSURE REDUCING VALVE
ELEC	ELECTRICAL	PSI	POUNDS PER SQUARE INCH
EQUIP	EQUIPMENT	PSIG	POUNDS PER SQUARE INCH GAUGE
EWC	ELECTRIC WATER COOLER	PWR	POWER
EWT	ENTERING WATER TEMPERATURE	R	DUCT RISER
E/A	EXHAUST AIR	R/A	RETURN AIR
EXIST	EXISTING	RCP	RADIANT CEILING PANEL
F	DEGREES FAHRENHEIT	RD	ROOF DRAIN
FCO	FLOOR CLEAN OUT	REC	RECESSED
FD	FLOOR DRAIN	RED	REDUCER
FDC	FIRE DEPARTMENT CONNECTION	RH	RELATIVE HUMIDITY
FL	FLOOR	RL/A	RELIEF AIR
FO	FUEL OIL	RM	ROOM
FOV	FUEL OIL VENT	RPM	REVOLUTIONS PER MINUTE
FOR	FUEL OIL RETURN	RW	RAIN WATER
FOS	FUEL OIL SUPPLY	SF	SQUARE FOOT
FPM	FEET PER MINUTE	S/A	SUPPLY AIR
FS	FLOOR SINK	SAN	SANITARY
FT	FOOT/FEET	SF	SQUARE FOOT
FTR	FIN TUBE RADIATION	SD	SMOKE DAMPER
GAL	GALLON	SM	SURFACE MOUNT
GF	GAS-FIRED	SP	STANDPIPE
GC	GENERAL CONTRACTOR	SP	STATIC PRESSURE
GPM	GALLONS PER MINUTE	STM	STEAM
GW	GREASE WASTE	T	THERMOSTAT
HB	HOSE BIB	TD	TEMPERATURE DROP
HP	HORSE POWER	TDR	TRENCH DRAIN
HTG	HEATING	TEMP	TEMPERATURE
HTR	HEATER	TYP	TYPICAL
HW	HOT WATER	UG	UNDERGROUND
HYD	HYDRANT	VAC	VACUUM
ID	INDIRECT	V	VENT
IN	INCH	VAV	VARIABLE AIR VOLUME
INV	INVERT	VENT	VENTILATION
LB	POUND	VTR	VENT THROUGH ROOF
LB/HR	POUNDS PER HOUR	W	WASTE
LAT	LEAVING AIR TEMPERATURE	WB	WET BULB
LP	LOW PRESSURE	WCO	WALL CLEAN OUT
LPG	LIQUEFIED PETROLEUM GAS	WH	WALL HYDRANT

Equipment Abbreviations

AC	AIR CONDITIONING UNIT	ET	EXPANSION TANK
ACCU	AIR COOLING CONDENSING UNIT	EWH	ELECTRIC WATER HEATER
AHU	AIR HANDLING UNIT	FCU	FAN COIL UNIT
AS	AIR SEPARATOR	FP	FIRE PUMP
B	BOILER	GI	GREASE INTERCEPTOR
CH	CHILLER	GRV	GRAVITY ROOF VENTILATOR
CT	COOLING TOWER	HWP	HEATING WATER PUMP
CUH	CABINET UNIT HEATER	HRU	HEAT RECOVERY UNIT
CHWP	CHILLED WATER PUMP	PRV	POWER ROOF VENTILATOR
DBP	DOMESTIC WATER BOOSTER PUMP	RE	RETURN/EXHAUST FAN
DC	DUCT MOUNTED COIL	RTU	ROOFTOP UNIT
DCP	DOMESTIC WATER CIRCULATING PUMP	SP	SUMP PUMP
EF	EXHAUST FAN	UH	UNIT HEATER
EDC	ELECTRIC DUCT COIL	WH	WATER HEATER

* NOTE *
ALL OF GENERAL NOTES ON THIS SHEET ARE TO BE APPLIED TO ALL OTHER DRAWINGS IN THIS SET. THE SYMBOLS AND ABBREVIATIONS SHOWN ON THIS SHEET MAY OR MAY NOT BE USED IN THIS SET OF DRAWINGS.

Plumbing Symbols

- 2" — Nominal Pipe Size
- Above Ground Piping
- Below Ground Piping
- 1/8" / 12" SLOPE — Pipe Slope (When Applicable)
- (E) — Existing Pipe To Remain
- Pipe To Be Demolished
- CW — Domestic Cold-Water
- NPW — Non-Potable Water
- S-CW — Soft Cold-Water
- F-CW — Filtered Cold-Water
- RO — Reverse Osmosis Water
- HW — Domestic Hot-Water
- HW 140° — Domestic Hot-Water 140°
- HW-R — Hot-Water Recirculation
- HW-R 140° — Hot-Water Recirculation 140°
- SS — Sanitary Drain
- V — Sanitary Vent
- WV — Sanitary Wet Vent
- CWV — Combination DWV
- CD — Condensate Drain
- ID — Indirect Drain
- GW — Grease Waste
- GV — Grease Vent
- PD — Pump Discharge
- SD — Storm Drain
- OSD — Storm Overflow
- CA — Compressed Air
- G — Natural Gas
- LP — Liquid Propane
- Pipe Rise / Drop

Pipe Accessory Notes

- 4" FCO — Cleanout
- 2" CHECK — Check Valve
- 2" BALANCE — Balancing Valve
- 2" CIRC — Circuit Setter
- 2" GATE — Gate Valve
- 2" S/O — Ball Valve
- 2" STRAIN — Fluid Strainer
- S — 1" GAS-CNTRL — Emergency Gas Shutoff
- 1" PLUG — Plug Valve
- 1" GAS COCK — Gas Shutoff Cock
- 1" REG — Gas Regulator
- T/P — 1" T/V — Thermostatic Valve
- T/P — TMV-XT/P — Mixing Valve
- EM — TMVEM — Emergency Mixer
- 2" PRV — Pressure Reducing Valve
- (W) — 2" METER — Water Meter
- Double Check Valve
- Reduced Pressure Zone

Plumbing Fixture Notes

- Floor Drain — Design Size
- 0" FD-1 — Identity Type
- 2 DFU — Drainage Fixture Units
- 2" FD-3 — Floor Drain w/ Deep Seal Trap
- 2" FD-3P — Floor Drain w/ Trap Primer "P" Indicates Primer Connection
- 2" FD-7 — Floor Drain w/ Integral Cleanout
- 3" AD-1 — Area Drain (No Trap)
- 6" DD-1 — Deck Drain
- 3" HD-1 — Hub Drain (Funnel Type)
- 3" FS-4 — Floor Sink
- 8" SD-12 — Roof Drain
- 6" SD-1 — Combination Drain
- 2000 SF — Rainfall Surface Area

Plumbing General Notes

A. PITCH UNDERFLOOR SANITARY WASTE PIPING AT 1/4" PER FOOT FOR 2" PIPING, 1/8" PER FOOT FOR LARGER PIPING.
B. FIELD VERIFY LOCATION AND INVERTS OF SITE UTILITIES PRIOR TO INSTALLATION.
C. ROUTE DOMESTIC WATER AND SANITARY SEWER SERVICES TO SITE UTILITIES. COORDINATE REQUIREMENTS WITH UTILITY PROVIDER AND PAY ASSOCIATED FEES.
D. WASTE AND VENT PIPING BELOW FLOOR AND THROUGH FLOOR SHALL BE 2" MINIMUM.
E. PROVIDE CLEANOUT IN ACCESSIBLE LOCATION AT THE BASE OF ALL PLUMBING RISERS.

Project Requirements

A. COORDINATE INSTALLATION OF PIPING, DUCTWORK, CONDUIT, LIGHTS, CABLE TRAY, STRUCTURE, AND EQUIPMENT TO PREVENT CONFLICTS.
B. FINAL PRODUCT SHALL BE A COMPLETE AND FUNCTIONING SYSTEM, AND SHALL CONFORM TO ALL REQUIREMENTS OF APPLICABLE FEDERAL, STATE, AND LOCAL CODES, INCLUDING BUT NOT LIMITED TO THE INTERNATIONAL BUILDING CODE AND INTERNATIONAL MECHANICAL CODE.
C. LOCATE DUCTWORK, PIPING AND MECHANICAL EQUIPMENT AWAY FROM THE SPACE ABOVE ELECTRICAL PANELS. TRANSFORMERS AND OTHER ELECTRICAL EQUIPMENT.
D. PROVIDE SLEEVES AND/OR OPENINGS TO RUN PIPES AND DUCTS THROUGH FOUNDATIONS, FLOORS, WALLS, AND ROOF.
E. MAINTAIN CLEAR ACCESS TO SERVICE EQUIPMENT AND OTHER ACCESSORIES REQUIRING SERVICE. VISUAL INSPECTION OR HAND OPERATION. WHERE INDICATED OR REQUIRED, PROVIDE ACCESS PANELS OF THE TYPE SELECTED TO SUIT MATERIALS IN WHICH INSTALLED.
F. ADJUST PIPING AND DUCTWORK SIZES TO PROPERLY CONNECT TO MECHANICAL EQUIPMENT.
G. PIPE SIZES SHOWN SHALL BE CONTINUED IN THE DIRECTION OF FLOW UNTIL ANOTHER SIZE IS SHOWN.
H. FOR DETAILS, EQUIPMENT CONNECTIONS, AND PIPE SIZES NOT SHOWN ON THE SEGMENTS, REFER TO DETAILS, SCHEDULES, AND SPECIFICATIONS.
I. INSTALL ALL EQUIPMENT IN ACCORDANCE WITH THE RESPECTIVE MANUFACTURER'S WRITTEN INSTALLATION INSTRUCTIONS, AT A LEVEL OF QUALITY AND WORKMANSHIP CONSISTENT WITH THE SPECIFICATIONS.
J. LOCATIONS OF PIPING, DUCTWORK AND EQUIPMENT AS INDICATED ON THE DRAWING, ARE APPROXIMATE AND SUBJECT TO MINOR ADJUSTMENTS IN THE FIELD. WORK SHALL BE COORDINATED WITH ALL OTHER TRADES TO AVOID INTERFERENCE IN THE FIELD.
K. INSTALL EXPOSED PIPING AND DUCTWORK AS HIGH AS PRACTICAL IN ROOMS WITHOUT CEILINGS.
L. THE CONTRACTOR'S WORK SCHEDULE SHALL BE SUBMITTED TO AND APPROVED BY THE OWNER.
M. PRIOR TO STARTING WORK, SUBMIT SHOP DRAWINGS FOR ALL MECHANICAL EQUIPMENT, PLUMBING FIXTURES, AND DIFFUSERS.
N. CONTRACTOR SHALL OBTAIN AND PAY FOR ALL NECESSARY PERMITS AND SHALL ARRANGE FOR ALL INSPECTIONS AS REQUIRED.
O. PROVIDE ONE YEAR WARRANTY FOR ALL WORKMANSHIP AND MATERIALS AFTER THE DATE OF FINAL ACCEPTANCE.

Plumbing Sheet Index

P0.1 Plumbing Title Sheet
P1.1 Plumbing Waste and Vent
P1.2 Plumbing Domestic Water

LST Consulting Engineers, PA
MANHATTAN: 4809 Vue Du Lac Place, Suite 201, Manhattan, KS 66503, 785.587.8042
WICHITA: 125 S. Washington, Suite 150, Wichita, KS 67202, 316.285.0696
www.LSTengineers.com
mail@LSTengineers.com

Project 24042 — 08-15-2024

Plumbing Fixture Schedule

Type Identity	Manufacturer	Model	Product Type	Finish	Trim Manufacturer M/N	Domestic Connections Cold Water	Domestic Connections Hot Water	Domestic Connections Piping Size(s)	Drain-Waste-Vent Drain Size	Drain-Waste-Vent Vent Size	Schedule Notes
LAV-A	Kohler	K-2005	Wall Hung ADA	White	Kohler/ 15198-4RA	Yes	Yes	1/2"	2"	1 1/2"	1,2,3,4
LAV-B	By Others	N/A	Wall Hung	Stainless Steel	Included	Yes	Yes	1/2"	2"	2"	5
CCB	Sioux Chief	696-R2313MF	Washing Machine	White	N/A	Yes	Yes	1/2"	2"	2"	
ICB	Sioux Chief	696-RG1010MF	Ice Maker	White	N/A	Yes	No	1/2"	3/4"		
SS	Fiat	MSB-2424	Janitor	White	Chicago Faucets / 897-Cp	Yes	Yes	3/4"	3"	3"	
WC	Kohler	3999-0	Tank ADA	White	Kohler/ 4650-0	Yes	No	3/4"	4"	2"	1

GENERAL:
• PROVIDE FIXTURES WITH ALL TRIM NECESSARY FOR COMPLETE INSTALLATION

NOTES:
1. FIXTURE AND INSTALLATION TO MEET REQUIREMENTS OF AMERICAN'S WITH DISABILITIES ACT.
2. TRIM SHALL BE PROVIDED WITH POLISHED CHROME FINISH.
3. PROVIDE DEARBORN SUPPLIES WITH STOPS AND ESCUTCHEON PLATE, 1-1/4" CAST BRASS P-TRAP.
4. INSULATE WATER AND WASTE PIPING BELOW LAVATORY. UTILIZE INSULATION KIT EQUIVALENT TO LAVGUARD BY TRUEBRO.
5. COORDINATE INSTALLATION REQUIREMENTS WITH EQUIPMENT PROVIDED BY OTHERS.

Electric Water Heater Schedule

Identity	Manufacturer	Model	Product Type	Domestic Piping Size	Temp. Range Cold	Temp. Range Hot	Storage Capacity	Electric Heat Rating	Electrical Voltage	Electrical Phase
EWH	AO Smith	ENT-55	Storage	1"	40 °F	140 °F	55 gal	4.5 kW	240 V	1

Domestic Circulator Pump Schedule

Mark	Manufacturer	Model	Product Type	Material	Design Pipe Size	Connections Suction	Connections Discharge	Motor Power	Motor RPM	Motor FLA	Electrical Voltage	Electrical Phase
HWP	Bell & Gossett	ECOCIRC e3-6V	Inline	Brass	1/2"	1/2"	1/2"	28 W	4600	1.0 A	120 V	1

1. PROVIDE CLAMP ON AQUASTAT.

Floor Drain Schedule

Type Identity	Manufacturer	Model	Product Type	Body Material	Strainer Type	Design Pipe Size	Drain-Waste-Vent Drain Size	Drain-Waste-Vent Vent Size
FD	Wade	1100	Round Strainer	Cast Iron	Nickel Bronze	2"	2"	2"
FS-4	Watts	FS-740	12" Square X 8" Deep	Cast Iron	Aluminum	3"	3"	2"

1. VENT SIZE SHOWN ONLY APPLICABLE WHERE DEDICATED FIXTURE VENT IS USED, REFERENCE RISER DIAGRAM.
2. COORDINATE DRAIN TYPE WITH INSTALLATION AND ADJUST TO MATCH CONSTRUCTION TYPE.
3. PROVIDE TRAP SEAL PROTECTION DEVICE EQUIVALENT TO PROSET TRAPGUARD.

JonesGillamRenz
730 N. Ninth
Salina, KS 67401
785.827.0386
1881 Main Street, Suite 301
Kansas City, MO 64108
jgr@jgrarchitects.com

ROOTS COFFEE CO.
9805 S. YODER ROAD
YODER, KANSAS

JOHN F. LEWIS-SMITH — 14654 — KANSAS — PROFESSIONAL ENGINEER
2024.08.21 10:06:02-05'00'

REVISIONS:

DATE: 08-15-2024
JOB: 21-3168
SHEET NO.: P0.1

COPYRIGHTED ©

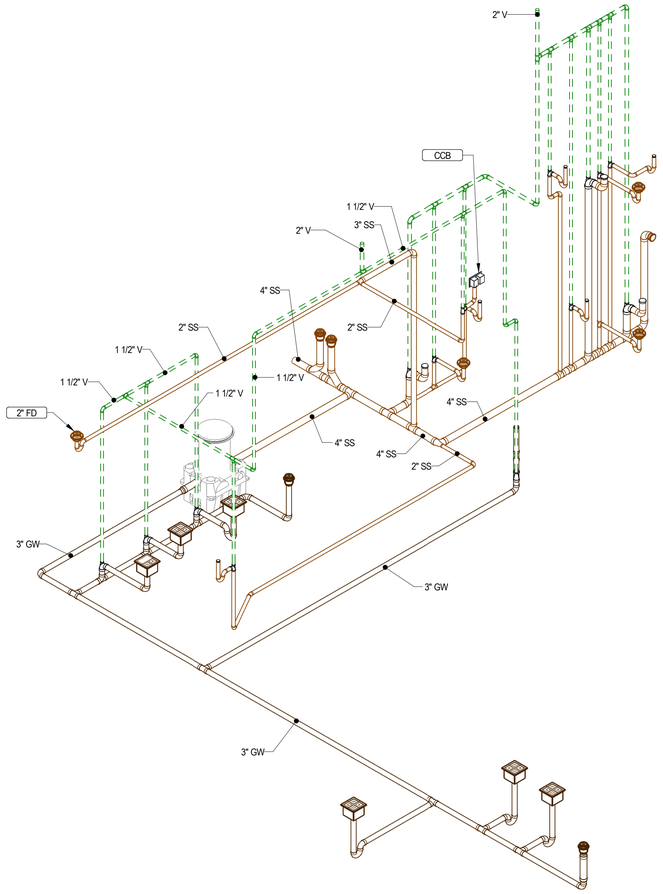

3 WASTE & VENT RISER DIAGRAM



2 UPPER LEVEL DRAIN/VENT PLAN

1/4" = 1'-0"

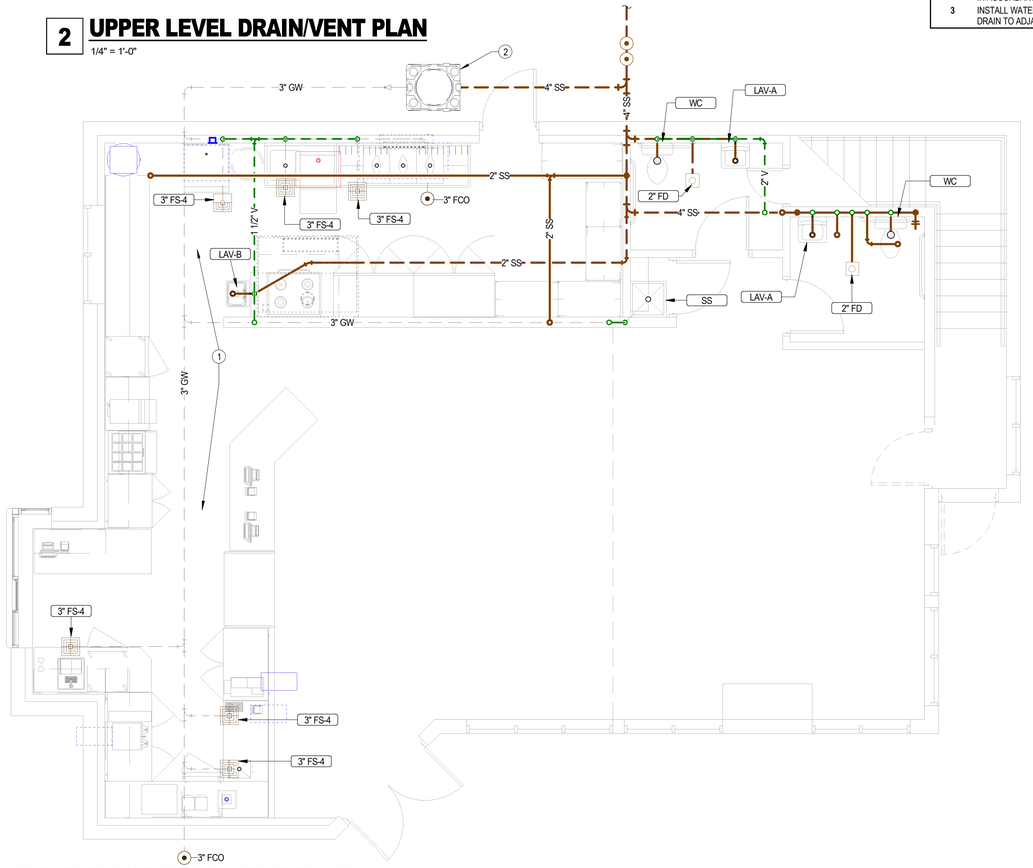

1 FIRST FLOOR DRAIN/VENT PLAN

1/4" = 1'-0"

NOTES BY SYMBOL

1. COORDINATE PLUMBING REQUIREMENTS FOR KITCHEN EQUIPMENT WITH EQUIPMENT PROVIDED. SEE FOOD SERVICE DRAWINGS FOR ADDITIONAL INFORMATION.
2. PROVIDE GREASE INTERCEPTOR EQUIVALENT TO SCHIER MODEL GB-50. INSTALL IN ACCORDANCE WITH MANUFACTURER'S RECOMMENDATIONS.
3. INSTALL WATER HEATER IN STAINLESS STEEL OR PLASTIC DRAIN PAN. ROUTE DRAIN TO ADJACENT FLOOR DRAIN.

LST Consulting Engineers, PA
MANHATTAN
4809 Vue Du Lac Place, Suite 201
Manhattan, KS 66503
785.587.8042
WICHITA
125 S. Washington, Suite 150
Wichita, KS 67202
316.265.0696
www.LSTengineers.com
mail@LSTengineers.com

Project 24042 08-15-2024

JonesGillamRenz
730 N. Ninth
Salina, KS 67401
785.827.0386
1881 Main Street, Suite 301
Kansas City, MO 64108
jgr@jgrarchitects.com

ROOTS COFFEE CO.
9805 S. YODER ROAD
YODER, KANSAS



2024.08.21 10:06:51-05'00'

REVISIONS:

DATE: 08-15-2024
JOB: 21-3168
SHEET NO.:

P1.1

COPYRIGHTED ©

LST Consulting Engineers, PA
MANHATTAN
4809 Vue Du Lac Place, Suite 201
Manhattan, KS 66503
785.587.8042
WICHITA
125 S. Washington, Suite 150
Wichita, KS 67202
316.265.0696
www.LSTengineers.com
mail@LSTengineers.com

Project 24042 08-15-2024

JonesGillamRenz
730 N. Ninth
Salina, KS 67401
785.827.0386
1881 Main Street, Suite 301
Kansas City, MO 64108
jgr@jgrarchitects.com

NOTES BY SYMBOL

1. ROUTE PEX PIPING BELOW SLAB TO KITCHEN EQUIPMENT. SEE FOOD SERVICE DRAWINGS FOR ADDITIONAL INFORMATION.
2. COORDINATE PLUMBING REQUIREMENTS FOR KITCHEN EQUIPMENT WITH EQUIPMENT PROVIDED. SEE FOOD SERVICE DRAWINGS FOR ADDITIONAL INFORMATION.
3. EXTEND TO CITY WATER MAIN. COORDINATE TAP AND METER REQUIREMENTS WITH CITY AND PAY ASSOCIATED FEES.

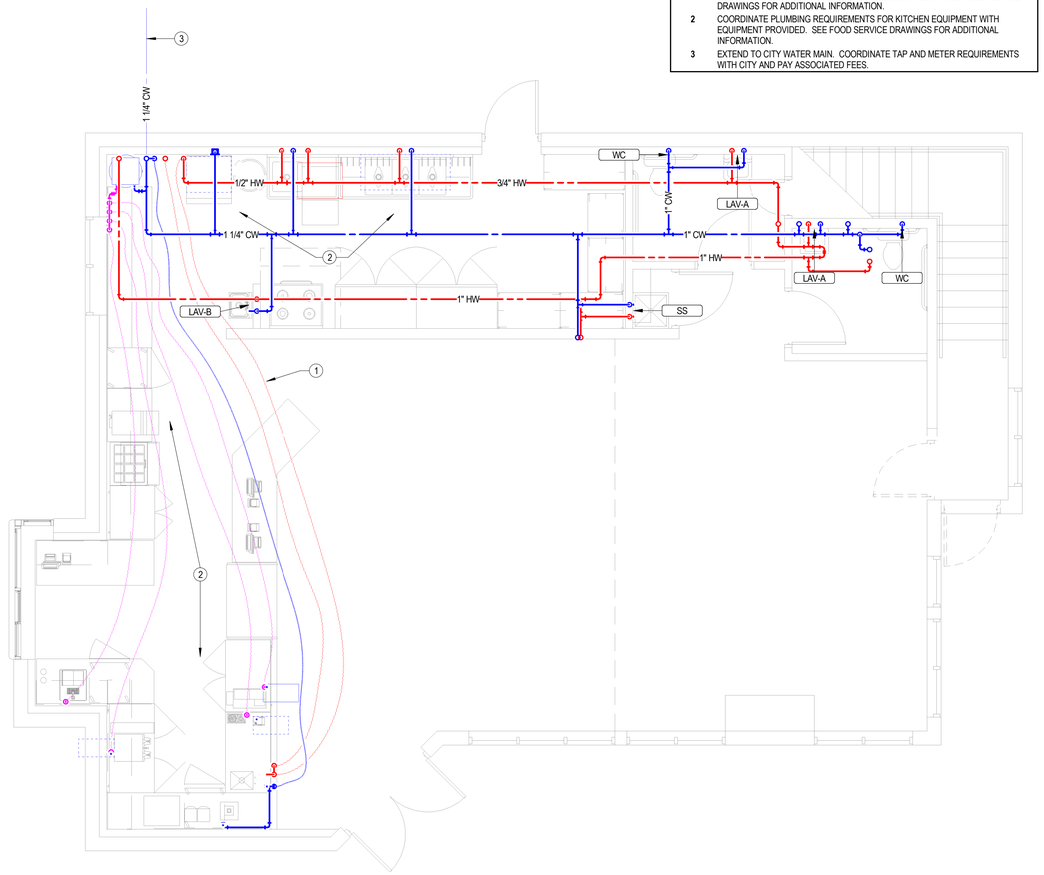

1 FIRST FLOOR DOMESTIC WATER PLAN

1/4" = 1'-0"

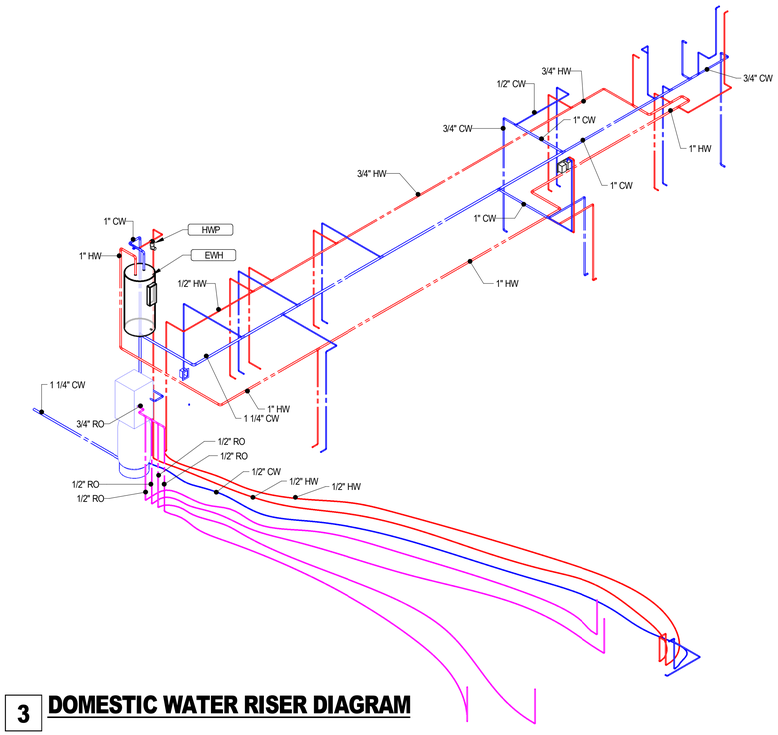

3 DOMESTIC WATER RISER DIAGRAM

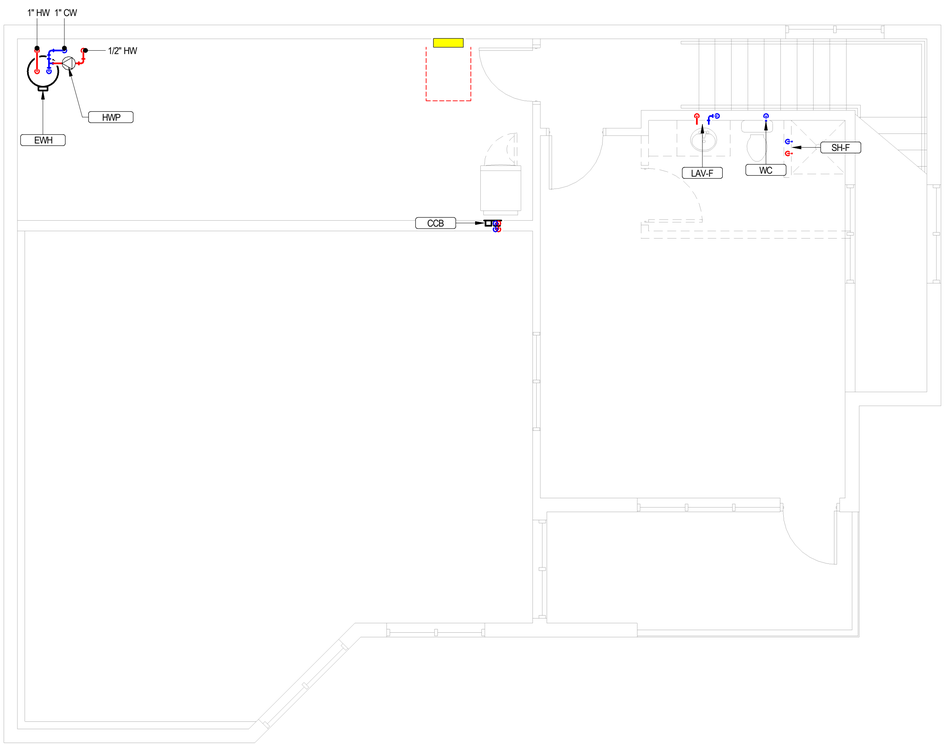

2 UPPER LEVEL DOMESTIC WATER PLAN

1/4" = 1'-0"

ROOTS COFFEE CO.
9805 S. YODER ROAD
YODER, KANSAS

JOHN F. LEWIS-SMITH
14654
KANSAS
PROFESSIONAL ENGINEER
2024.08.21 10:07:25-05'00'

REVISIONS:

DATE: 08-15-2024
JOB: 21-3168
SHEET NO.:

P1.2

COPYRIGHTED ©

Electrical Sheet List

E0.1	Electrical Title Sheet
E1.1	Lighting Plans
E1.2	Power Plans

LST Consulting Engineers, PA

MANHATTAN
4809 Vue Du Lac Place, Suite 201
Manhattan, KS 66503
785.587.8042

WICHITA
125 S. Washington, Suite 150
Wichita, KS 67202
316.265.0696

www.LSTengineers.com
mail@LSTengineers.com

Project 24042 **08-15-2024**

Electrical Abbreviations

1P	1 Pole (2P, 3P, 4P, ETC.)	MCB	Main Circuit Breaker
A, Amp	Ampere	MCC	Motor Control Center
AC	Above Counter	MDC	Main Distribution Center
ACLG	Above Ceiling	MDP	Main Distribution Panel
ADO	Automatic Door Opener	MFR	Manufacturer
AF	Amp Frame	MFS	Main Fused Disconnect Switch
AFF	Above Finished Floor	MH	Manhole
AFG	Above Finished Grade	MIC	Microphone
AFI	Arc Fault Circuit Interrupter	MIN	Minimum
AHU	Air Handling Unit	MISC	Miscellaneous
AL	Aluminum	MLO	Main Lugs Only
ALT	Alternate	MMS	Manual Motor Starter
AMP	Ampere	MOA	Multioutlet Assembly
AMPL	Amplifier	MSP	Motor Starter Panelboard
ANNUN	Annunciator	MSBD	Main Switchboard
APPROX	Approximately	MSS	Motor Starter Switch
AQ-STAT	Aquastat	MT	Mount
ARCH	Architect, Architectural	MT.C	Empty Conduit
AS	Amp Switch	MTS	Manual Transfer Switch
AT	Amp Trip	MTR	Motor, Motorized
ATS	Automatic Transfer Switch	N.C.	Normally Closed
AUTO	Automatic	NEC	National Electrical Code
AUX	Auxiliary	NEMA	National Electrical Manufacturer's Association
AV	Audio Visual	NFDS	Non-Fused Safety Disconnect Switch
AWG	American Wire Gauge	NIC	Not In Contract
BATT	Battery	NL	Night Light
BD	Board	N.O.	Normally Open
BLDG	Building	NPF	Normal Power Factor
BMS	Building Management System	NTS	Not To Scale
C	Conduit	OC	On Center
CAB	Cabinet	OH	Overhead
CAT	Catalog	OL	Overloads
CATV	Cable Television	PA	Public Address
CB	Circuit Breaker	PB	Pull Box Or Pushbutton
CCTV	Closed Circuit Television	PE	Pneumatic Electric
CKT	Circuit	PED	Pedestal
CLG	Ceiling	PF	Power Factor
COMB	Combination	PH	Phase
CMPR	Compressor	PIV	Post Indicating Valve
CONN	Connection	PNL	Panel
CONST	Construction	PP	Power Pole
CONT	Continuation Or Continuous	PR	Pair
CONTR	Contractor	PRI	Primary
CONV	Convector	PROJ	Projection
CP	Circulating Pump	PRV	Power Roof Ventilator
CRT	Cathode-Ray Tube	PT	Potential Transformer
CT	Current Transformer	PVC	Polyvinyl Chloride (Conduit)
CTR	Center	PWR	Power
CU	Copper	QUAN	Quantity
DCP	Domestic Water Circulating Pump	RCPT	Receptacle
DEPT	Department	REQD	Required
DET	Detail	RM	Room
DIA	Diameter	RSC	Rigid Steel Conduit
DISC	Disconnect	RTU	Roof Top Unit
DIST	Distribution	SC	Surface Conduit
DN	Down	SEC	Secondary
DPR	Damper	SHT	Sheet
DS	Safety Disconnect Switch	SIM	Similar
DT	Double Throw	SLD	Single-Line Diagram
DWG	Drawing	SN	Solid Neutral
EC	Electrical Contractor	SPEC	Specification
ELEC	Electric, Electrical	SPKR	Speaker
ELEV	Elevator	SP	Spare
ELU	Emergency Lighting Unit	SPP	Single-Point Power
EM	Emergency	SR	Surface Raceway
EMS	Energy Management System	SS	Stainless Steel
EMT	Electrical Metallic Tubing	SSW	Selector Switch
EP	Electric Pneumatic	S/S	Stop/Start Pushbuttons
EQUIP	Equipment	STA	Station
EWC	Electric Water Cooler	STD	Standard
EXIST	Existing	SURF	Surface Mounted
EXH	Exhaust	SW	Switch
EXP	Explosion Proof	SWBD	Switchboard
FA	Fire Alarm	SYM	Symmetrical
FABP	Fire Alarm Booster Power Supply Panel	SYS	System
FACP	Fire Alarm Control Panel	TEL	Telephone
FCU	Fan Coil Unit	TERM	Terminal
FIXT	Fixture	TL	Twist Lock
FLR	Floor	TR	Tamper Resistant
FLUOR	Fluorescent	T-STAT	Thermostat
FU	Fuse	TTC	Telephone Terminal Cabinet
FUDS	Fused Safety Disconnect Switch	TV	Television
GA	Gauge	TVTC	Television Terminal Cabinet
GAL	Gallon	TYP	Typical
GALV	Galvanized	UC	Under Counter
GC	General Contractor	UE	Underground Electrical
GEN	Generator	UG	Underground
GFI	Ground Fault Circuit Interrupter	UH	Unit Heater
GFP	Ground Fault Protector	UT	Underground Telephone
GND	Ground	UTIL	Utility
GRS	Galvanized Rigid Steel (Conduit)	UV	Ultraviolet
GYP BD	Gypsum Board	V	Volt
HOA	Hands-Off-Automatic Switch	VA	Volt-Amperes
HORIZ	Horizontal	VDT	Video Display Terminal
HP	Horsepower	VERT	Vertical
HPF	High Power Factor	VFD	Variable Frequency Drive
HT	Height	VOL	Volume
HTG	Heating	W	Watt
HTR	Heater	W/	With
HV	High Voltage	WG	Wire Guard
HVAC	Heating, Ventilating And Air Conditioning	WH	Water Heater
		WO	Without
IC	Interrupting Capacity	WP	Weatherproof
IG	Isolated Ground	XFMR	Transformer
IMC	Intermediate Metal Conduit	XFR	Transfer
INCAND	Incandescent		
IR	Infrared		
I/W	Interlock With		
J-BOX	Junction Box	∠	Angle
KV	Kilovolt	@	At
KVA	Kilovolt-Ampere	▲	Delta
KVAR	Kilovolt-Ampere Reactive	'	Feet
KW	Kilowatt	"	Inches
KWH	Kilowatt Hour	#	Number
LOC	Locate Or Location	Ø	Phase
LT	Light	C	Center Line
LTG	Lighting	P	Plate
LTNG	Lightning		
LV	Low Voltage		
MAX	Maximum		
MAG.S	Magnetic Starter		
M/C	Momentary Contact		
MC	Mechanical Contractor		

Electrical Symbol Legend

Lighting Symbols

- Lighting Fixtures, Typical, Rectangular (Various Symbols) — Filled circles indicate recessed. Open circles indicate surface-mounted. Diagonal line indicates lensed. Outer dots indicate suspended.
- Lighting Fixtures, Typical, Round (Various Symbols) — Center dot indicates pendant. Diagonal line indicates lensed. Chevron indicates wall wash.
- Wall-mounted fixtures, Typical (Various Symbols)
- Strip Fixture
- Directional Light, Track Light, Flood Light
- Linear Light, Tape Light
- Emergency Lighting Unit, Ceiling-Mounted, Integral Battery
- Emergency Lighting Unit, Ceiling-Mounted, Remote Battery
- Emergency Lighting Unit, Wall-Mounted, Integral Battery
- Emergency Lighting Unit, Wall-Mounted, Remote Battery
- Exit Light, Ceiling-Mounted. Shading and arrows indicate faces and directional chevrons.
- Exit Light, Wall-Mounted. Shading and arrows indicate faces and directional chevrons.
- Exit/ELU Combo
- Pole/Area Lights
- Post-Top Area Light
- Bollard Light
- Diagonal hatch indicates light on a critical circuit.
- Solid hatch indicates light on an emergency or life safety circuit.
- Single-Pole Switch
- Two-Pole Switch
- Three-Pole Switch

Switch Modifiers:

3: 3-Way	OS: Occupancy Sensor
4: 4-Way	VS: Vacancy Sensor
K: Keyed	CT: Above-Counter
D: Dimming	LV: Low-Voltage
T: Timer	M: Motor-Rated

- Lighting Contactor
- LC — Lighting Control Panel
- OS — Occupancy Sensor
- DL — Daylight Harvesting Sensor

Lighting Tags

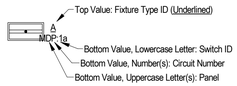

Absence of a switch designation on a lighting fixture indicates fixture is controlled by the only switch in the space. An "x" in place of the switch designation indicates unswitched.

Switch ID indicated by a lowercase letter. Switch IDs are unique per space. A switch with an ID "a" controls all devices within the space in which it is located tagged with "a". A switch without a tagged ID controls all lighting fixtures within a space. ID tags may be used on control devices other than switches, such as occupancy sensors or contactors.

Grounding and Lightning Protection Symbols

- Ground Rod
- Ground Rod with Test Well
- Static Ground Receptacle
- Lightning Protection Air Terminal
- Lightning Protection Conductor Splice

Power Symbols

- Simplex Receptacle
- Duplex Receptacle
- Quadruplex Receptacle
- 6-30 — Special Receptacle, Type as Indicated

Receptacle Modifiers:
##": Height AFF
CT: Mounted Above Counter Top
GFI: Ground-Fault Circuit Interrupter
WP: Weatherproof In-Use Cover

- Half shading indicates split (typically switched)
- Outside shading indicates emergency circuit
- Center shading indicates isolated ground
- Multioutlet Assembly — Filled squares indicate 120V outlet. Open squares indicate with USB
- Cord Reel, Device Varies
- Drop Cord, Device Varies
- Junction Box
- F1 — Floor Box, see schedule for type
- Emergency Power Off
- DO — Door Opener Push Plate
- M — Power Meter
- Safety Switch, Fused
- Safety Switch, Unfused
- Motor Starter
- Combination Starter/Disconnect
- Contactor

Power Device and Equipment Tags

LP1A1a — Electrical DeviceTags: Uppercase letter(s) indicates Panel ID and circuit number. Lowercase letter indicates designation of controlling switch (where applicable).

XX-1 — Equipment Tags: Equipment ID is indicated by an underlined tag adjacent to the equipment. See the equipment connection schedule for description, electrical requirements, and panel and circuit number. Symbols/graphic appearance of equipment varies.

Wiring

- Solid, arced lines connecting equipment, devices, or fixtures indicate unswitched power circuiting. Wires are only intended to indicate to what circuit devices are connected. Actual connections, circuit routing, installtion, junction boxes, etc. shall be field-determined by the contractor.
- Dashed, arced lines connecting equipment, devices, or fixtures indicate switched power.
- Home run to branch circuit panelboard. The equipment name and circuit number(s) are indicated, separated by a hyphen. Homeruns are only intended to indicate panel and circuit number. Actual homerun location shall be field-determined by the contractor.

Power Distribution Equipment

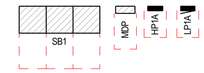

Hatched fill indicates distribution panel or switchboard.
Solid fill indicates branch panel or load center.
Dashed box indicates code-required clearance (width and depth).
Door indicates front of recessed panel.

Devices and fixtures are tagged with Panel and circuit number. For example, a device tagged with "A:1" indicates the device is circuited to panel designated "A," circuit number 1.

T1 — Transformer: Typically transformer names begin with or contain the letter "T". See Single-Line Diagram for description and requirements.

Telecom Symbols

- Data Outlet
- Telephone Outlet
- Data/Telephone Outlet

Outlet Modifiers:
##": Height AFF OC
CT: Mounted Above Counter Top

- Wireless Access Point
- TV — TV Outlet

Nurse Call Symbols

- N — Nurse Call Corridor Light. Number of lights as indicated
- X — Nurse Call Device. B: Code Blue; D: Duty Station; E: Emergency; P: Patient Call; S: Staff
- XXXX — Nurse Call Control Unit. NCAP: Nurse Call Annunciator Panel; NCHS: Nurse Call Host Controller; NCPA: Nurse Call Power Supply; NCTC: Nurse Call Terminal Cabinet; NCUPS: Uninterruptable Power Supply

Security Symbols

- Security Camera. PTZ: Pan/Tilt/Zoom
- CR — Card Reader
- CK — Card Reader with Keypad
- CC TV — Closed Circuit TV Outlet
- DC — Door Contact
- ES — Electric Strike
- IC — Intercom
- ML — Magnetic Lock
- RX — Request to Exit Button
- REX — Request to Exit Sensor
- MD — Motion Detector
- XXX — Security Control Unit. SCP: Security Control Panel; SPS: Security Power Supply Unit

Construction Phasing

(Typical All Symbols and Equipment)

- Existing to Remain
- Existing to Be Demolished
- New

Miscellaneous

- Area Not in Contract
- # — Note by Symbol
- Callout: Top Value: Detail Number on Sheet; Bottom Value: Sheet Number of Detail
- Room 1 — Room Name and Number

Fire Alarm Symbols

- F — Manual Pull Station
- F — Horn, Wall
- F — Horn, Ceiling
- Strobe, Wall, Candela as indicated
- Strobe, Ceiling, Candela as indicated
- Horn/Strobe, Wall, Candela as indicated
- Horn/Strobe, Ceiling, Candela as indicated
- Remote Indicator w/ Test Switch, Wall
- Remote Indicate w/ Test Switch, Ceiling
- Smoke Detector
- Heat Detector
- Carbon Monoxide Detector
- Beam Detector T: Transmitter R: Receiver
- Combination Detector (Up to Three)
- Duct Smoke Detector
- Smoke Damper
- DH — Door Holder
- DCL — Door Closer
- Fire Service Phone
- XXX — Addressible Module. AIM: Addressible Input Module; AOM:Addressible Output Control Module; AIO: Addressible Input/Output Module
- XXXX — Fire Alarm Control Unit. EVAC: Voice Evacuation Control Panel; FAA: Fire Alarm Annunciator; FACP: Fire Alarm Control Panel; FATC: Fire Alarm Terminal Cabinet; NACP: Notification Appliance Circuit Panel; FAMN: Fire Alarm Mass Notification Control Panel
- XX — Supervisory or Interface Device. PIV: Post Indicator Valve Supervisory; PS: Pressure Switch; R: Non-Addressible Relay; VS: Valve Supervisory Switch; WF: Water Flow Switch

Electrical General Notes

A. Conductors operating at 50 volts or greater shall be in raceway. Raceway within the structure above the floor slab shall be metal. Raceway below the floor slab and underground raceway outside the structure shall be PVC.

B. Low voltage cables or conductors operating at less than 50 volts shall be in metal raceway where installed within walls or inaccessible spaces. Low voltage cables may be run in cable tray where noted. Low voltage cables may be run in cable support hooks above accessible ceilings where noted. Low voltage cable shall be plenum rated in plenum spaces.

C. Coordinate locations of devices with architectural elevations and details. Architectural elevations and details take precedence over locations shown on electrical drawings.

D. Provide cable or conduit and wire as required to achieve circuiting shown. Size conductors per NEC ampacity and wire fill criteria. Provide dedicated neutral and ground conductors for circuiting, unless noted otherwise. Increase branch circuit and/or feeder conductors including equipment grounding conductors proportionally for no more than 3% voltage drop on branch circuits and 2% on feeders per energy code.

E. It is the responsibility of this contractor to coordinate installation of electrical systems and those requiring electrical connections to maintain NEC required clearances, included but not limited to areas above accessible ceilings.

F. Coordinate with other trades for proper installation of equipment. Consult the drawings of other trades or crafts to avoid conflicts with equipment, etc. Conflicts shall be resolved prior to rough-in and at no additional cost to the owner.

G. Leave the site clean and ready for occupancy. Remove dirt, debris, empty cartons, tools, conduit and wire scraps, and miscellaneous spare equipment and materials used in this division of the work during construction. Components shall be free of dust, grit, and foreign materials and left as new before final acceptance of work.

H. The symbols and abbreviations shown on this sheet may or may not be used in this set of drawings.

I. Perform work to comply with the standard practices for good workmanship published by National Electrical Contractors Association (NECA). Comply with the latest enforced edition of the National Electrical Code (NEC), local codes, amendments, and ordinances.

J. Field coordinate final mechanical and equipment locations along with connection requirements and control wiring prior to rough-in. Adjust corresponding circuit breaker ratings and branch circuiting accordingly.

K. Electrical work shall be performed under the supervision of a licensed master electrician. Procure permits and licenses and pay fees associated with this work.

L. Materials furnished for this project shall be new, commercial grade, free of defects, and listed by a nationally recognized testing laboratory unless noted otherwise.

M. Provide complete operation & maintenance manual including approved submittal drawings, warranty information for product supplied, and manufactures operation and maintenance instructions.

N. Conduit and wire shall not be installed below floor slab except as allowed in the project specifications.

O. Provide junction boxes with empty conduit for all phone/data/POS/security systems as directed by Owner.

JonesGillamRenz
730 N. Ninth
Salina, KS 67401
785.827.0366
1881 Main Street, Suite 301
Kansas City, MO 64108
jgr@jgrarchitects.com

ROOTS COFFEE CO.

9805 S. YODER ROAD

YODER, KANSAS

JOHN F. LEWIS-SMITH
14654
KANSAS
PROFESSIONAL ENGINEER

2024.08.21 10:10:03-05'00'

REVISIONS:

DATE: 08-15-2024
JOB: 21-3168
SHEET NO.:

E0.1

COPYRIGHTED ©

LST Consulting Engineers, PA
MANHATTAN
4809 Vue Du Lac Place, Suite 201
Manhattan, KS 66503
785.587.8042
WICHITA
125 S. Washington, Suite 150
Wichita, KS 67202
316.265.0696
www.LSTengineers.com
mail@LSTengineers.com

Project 24042

08-15-2024

Luminaire Schedule

Mark	Manufacturer	Model Number	Description	Lumens	Watts	Notes
A	Cooper Lighting	SMD6LED	Surface LED Downlight	1200 lm	16 W	
B	Day-Brite	CSW48-28-35UDZTZO	Linear Wall Mount	2800 lm	31 W	
C	Lightolier	C6L-60-935-M-Z10-U	6" Downlight	6100 lm	53 W	7
D	Lightolier	C6L-30-935-M-Z10-U	6" Downlight	3100 lm	26 W	7
E	LSL	LSLEDR1	Two-Head Emergency Light		2 W	1
E/X	LSL	LSLEDEXCU	Exit/Emergency Combo, Red Lettering		4 W	1, 2
F	Day-Brite	1FPZ45L835-4-DS-UNV-DIM	1 x 4 Flat Panel	4500 lm	38 W	
G2	Day-Brite	FSS220L835-UNV-DIM	2' Utility Strip	2000 lm	18 W	
G4	Day-Brite	FSS445L835-UNV-DIM	4' Utility Strip	4000 lm	30 W	
H	Gardco	PWS-48L-300-AM-G2-2	Exterior Wall Pack	2100 lm	48 W	3, 4, 5, 6
P	Gardco	P26-64L-400-AM-G2-5	Area Light, Type III	17604 lm	65 W	3, 5, 6, 8, 9

GENERAL:
- ALL LED'S SHALL BE 4000K CORRELATED COLOR TEMPERATURE, MINIMUM 80 CRI
- ALL LED FIXTURES SHALL ADHERE TO LM79 AND LM80 STANDARDS
- PROVIDE MANUFACTURER'S FLANGE KIT WHERE LAY-IN FIXTURES ARE TO BE INSTALLED IN GYP.

NOTES:
1. PROVIDE FIXTURE WITH EMERGENCY BATTERY INTEGRAL CHARGER WITH SELF-DIAGNOSTIC/SELF-TESTING ELECTRONICS.
2. FIXTURE SHALL BE CAPABLE OF WALL OR CEILING MOUNT APPLICATIONS AND SHALL HAVE BREAK-OUT DIRECTIONAL CHEVRONS.
3. PROVIDE FIXTURE WITH INTEGRAL PHOTOCELL.
4. PROVIDE FIXTURES SHOWN SHADED WITH EMERGENCY DRIVER TO OPERATE FIXTURE FOR 90 MINUTES UPON LOSS OF NORMAL POWER. REMOTE MOUNT BATTERY PACK ABOVE ADJACENT CEILING AREA AND INSTALL REMOTE TEST SWITCH FLUSH IN CEILING.
5. FIXTURE SHALL BE CAPABLE OF OPERATION IN TEMPERATURES RANGING FROM -40F THROUGH 104F.
6. U.L. LISTED FOR 'WET LOCATION'.
7. PROVIDE MANUFACTURERS SLOPED CEILING ADAPTER. PROVIDE FIXTURE RATED FOR DIRECT CONTACT WITH INSULATION OR PROVIDE MANUFACTURED ENCLOSURE TO KEEP INSULATION 3" AWAY FROM FIXTURE.
8. PROVIDE FIXTURE/POLE ASSEMBLY WITH 15' TALL 4" SQUARE STRAIGHT STEEL POLE, BLACK TO MATCH FIXTURE.
9. FIXTURE/POLE ASSEMBLY SHALL BE RATED FOR 100 MPH WIND LOADS. PROVIDE WITH VIBRATION DAMPER PER MANUFACTURER'S RECOMMENDATIONS.



1 **UPPER FLOOR LIGHTING PLAN**
1/4" = 1'-0"

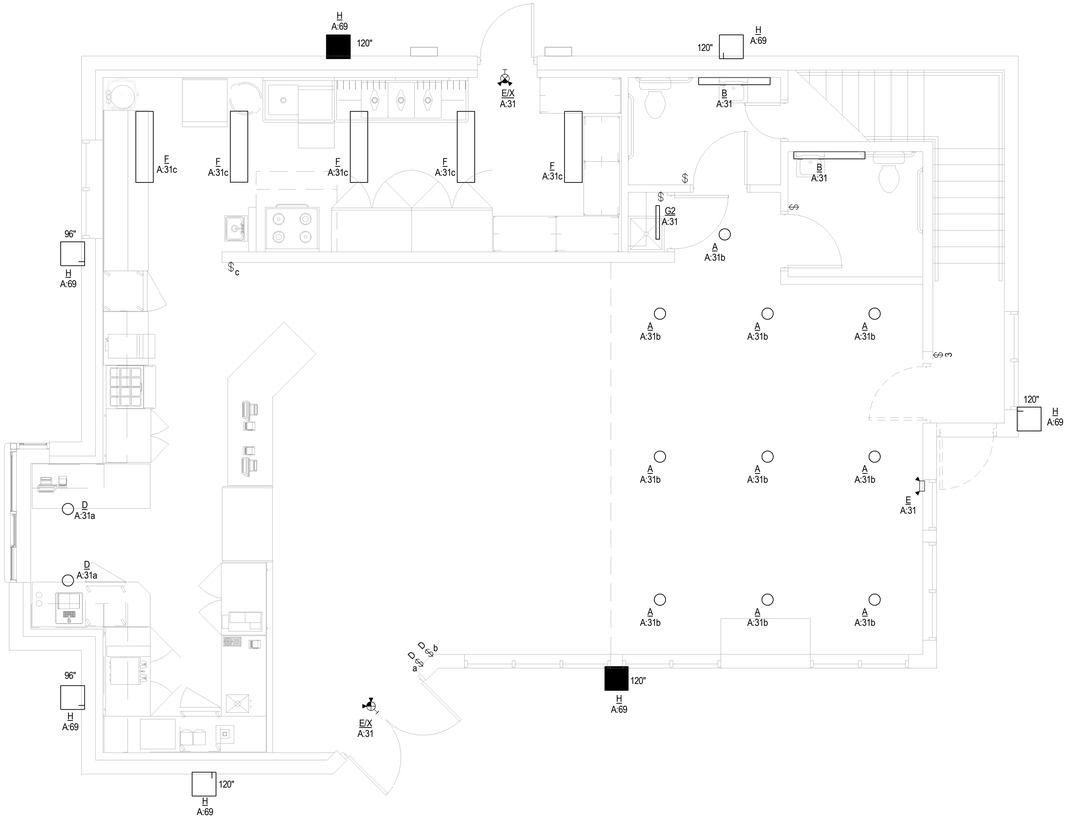

2 **FIRST FLOOR LIGHTING PLAN**
1/4" = 1'-0"

JonesGillamRenz
730 N. Ninth
Salina, KS 67401
785.827.0386
1881 Main Street, Suite 301
Kansas City, MO 64108
jgr@jgrarchitects.com

ROOTS COFFEE CO.

9805 S. YODER ROAD

YODER, KANSAS

JOHN F. LEWIS-SMITH
REGISTERED
14654
KANSAS
PROFESSIONAL ENGINEER

2024.08.21 10:10:27-05'00'

REVISIONS:

DATE: 08-15-2024
JOB: 21-3168
SHEET NO.:

E1.1

COPYRIGHTED ©

Panelboard: A

Location:
Supply:
Mounting: Surface
Enclosure: NEMA 1

Voltage: 240 V, 1Ø, 3W
Bus Rating: 400 A
Neutral: 100%
Feed-Thru Lugs: No
Features & Modifications: -

Mains Type: MCB
Mains Rating: 400 A
Mains FN/Note: -
SCCR: 10 kA

Ckt	Description	Circuitry	Trip (A)	FN	A KVA		B KVA		FN	Trip (A)	Circuitry	Description	Ckt
A:1	Reach-in Cooler	1/2"C,1#10,#10N,#10G	25	G	0.4	3.4				60	1"C,2#4,#4N,#10G	Heat Pump - Lower Level	A:2
A:3	Reach-in Cooler	1/2"C,1#12,#12N,#12G	20	G			0.4	3.4					A:4
A:5	Reach-in Freezer	1/2"C,1#12,#12N,#12G	20	G	1	2.1				25	1/2"C,2#10,#10N,#10G	Heat Pump - Kitchen	A:6
A:7	Ice Maker	1/2"C,1#12,#12N,#12G	20	G			0.9	2.1					A:8
A:9	RO Equipment	1/2"C,1#12,#12N,#12G	20		1.2	5.4				60	1"C,2#4,#4N,#10G	Blower Coil Unit - Upper Level	A:10
A:11	Receptacles - Seating	1/2"C,1#12,#12N,#12G	20				0.7	5.4					A:12
A:13	Receptacles - Toilet Rms, Etc.	1/2"C,1#12,#12N,#12G	20		0.7	1.2				25	1/2"C,2#10,#10N,#10G	Heat Pump - Upper Level	A:14
A:15	Receptacles - Signage	1/2"C,1#12,#12N,#12G	20				0.4	1.2					A:16
A:17	Receptacles - Seating	1/2"C,1#12,#12N,#12G	20		0.4	4.9				60	1"C,2#4,#4N,#10G	Blower Coil Unit - Lower Level	A:18
A:19	Range	3/4"C,2#6,#6N,#10G	50	G			4.3	4.9					A:20
A:21					4.3	4.8				50	3/4"C,2#6,#6N,#10G	Electric Heat Ckt #2	A:22
A:23	Drive Thru Signage	1/2"C,1#12,#12N,#12G	20				0.4	4.8					A:24
A:25	Receptacles - Upper Floor	1/2"C,1#12,#12N,#12G	20		0.7	2.8				30	1/2"C,2#10,#10N,#10G	Clothes Dryer	A:26
A:27	Receptacles - Upper Floor	1/2"C,1#12,#12N,#12G	20				0.7	2.8					A:28
A:29	HW Circ Pump	1/2"C,1#12,#12N,#12G	20		0.1	2.3				30	1/2"C,2#10,#10N,#10G	Water Heater	A:30
A:31	Lighting - Seating	1/2"C,1#12,#12N,#12G	20				1.1	2.3					A:32
A:33	Lighting - Upper Floor Seating	1/2"C,1#12,#12N,#12G	20		0.4	4.5			G	50	3/4"C,2#6,#6N,#10G	Dishwasher	A:34
A:35	Worktop Refrigerator	1/2"C,1#12,#12N,#12G	20	G			0.3	4.5					A:36
A:37	Coffee Brewer	1/2"C,2#10,#10N,#10G	30	G	2.9	1.8							A:38
A:39							2.9	1.8	G	20	1/2"C,2#12,#12N,#12G	Speed Oven	A:40
A:41	Refrigerated Cold Well	1/2"C,1#12,#12N,#12G	20	G	0.5	0.3			G	20	1/2"C,1#12,#12N,#12G	Make Table	A:42
A:43	Worktop Refrigerator	1/2"C,1#12,#12N,#12G	20	G			0.3	0.2		20	1/2"C,1#12,#12N,#12G	Clotheswasher	A:44
A:45	Undercounter Refrigerator	1/2"C,1#12,#12N,#12G	20	G	0.3	0.3							A:46
A:47	Blender	1/2"C,1#12,#12N,#12G	20	G			0.7	0.3		15	1/2"C,2#12,#12N,#12G	Kitchen Hood Exhaust	A:48
A:49	Blender	1/2"C,1#12,#12N,#12G	20	G	0.7	1							A:50
A:51	Undercounter Freezer	1/2"C,1#12,#12N,#12G	20	G			0.3	1		15	1/2"C,2#12,#12N,#12G	Kitchen Hood Makeup Unit	A:52
A:53	Espresso Machine	3/4"C,2#8,#8N,#10G	40	G	3.5	0				20	--	Spare	A:54
A:55							3.5	0		20	--	Spare	A:56
A:57	Worktop Refrigerator	1/2"C,1#12,#12N,#12G	20	G	0.3	0				20	--	Spare	A:58
A:59	Refrigerated Display Case	1/2"C,2#12,#12N,#12G	20	G			1.2	0		20	--	Spare	A:60
A:61					1.2	0				20	--	Spare	A:62
A:63	Coffee Grinder	1/2"C,1#12,#12N,#12G	20	G			0.6	0		20	--	Spare	A:64
A:65	POS Equipment	1/2"C,1#12,#12N,#12G	20		0.7	--				--	--	Space	A:66
A:67	Exterior Receptacles	1/2"C,1#12,#12N,#12G	20				0.5	--		--	--	Space	A:68
A:69	Lighting - Exterior	1/2"C,1#12,#12N,#12G	20		0.4	--				--	--	Space	A:70
A:71	Building Mounted Sign	1/2"C,1#12,#12N,#12G	20				0.4	--		--	--	Space	A:72
A:73	Kitchen Hood Lights	1/2"C,1#12,#12N,#12G	20		0	--				--	--	Space	A:74
A:75	Telecom Equipment	1/2"C,1#12,#12N,#12G	20				0.4	--		--	--	Space	A:76
A:77	EV Charger	1"C,2#6,#6N,#8G	40		3.4	--				--	--	Space	A:78
A:79							3.4	--		--	--	Space	A:80
A:81	Space	--	--		--	--				--	--	Space	A:82
A:83	Space	--	--		--	--	--	--		--	--	Space	A:84
			Connecte...		58 kVA		58 kVA						
			Connecte...		480 A		481 A						

Breaker Function Schedule

#	
	For any number, see panel schedule footer note
A	Arc-Fault Interrupter (AFCI) Protection
AR	Arc Energy Reduction Maintenance Switch
D	Demolished Circuit {now Spare or Space} {former circuit in brackets}
E	Existing-to-remain circuit
EM	Provide identification per NEC 700.12(I)(2)(4)
G	Ground-Fault Circuit Interrupter (GFCI) Protection (5 mA)
GE	Ground-Fault Protection for Equipment (30 mA)
GF	Adjustable Ground-Fault Protection for Equipment
H	Breaker hasp to prevent unintentional opening
L	Lockable open according to NEC 110.25
LSI	Long-Time, Short-Time, Instantaneous Adjustment
LSIG	Long-Time, Short-Time, Instantaneous and Ground-Fault Adjustments
N	New Circuit (in existing panel, previously spare or space)
NB	New breaker to repace existing breaker or space (new trip rating shown)
NR	New circuit to replace existing circuit {former circuit in brackets}
S	Switch-rated per NEC 240.83(D)

NOTES BY SYMBOL

1. METER BASE. COORDINATE WITH EVERGY.
2. PROVIDE 12"x12"x4" NEMA 3R JUNCTION BOX AT 12" ABOVE GRADE, WITH (2)2" CONDUITS TO PROPERTY LINE FOR TELECOM SERVICES BY OTHERS. PROVIDE (2)2" CONDUITS TO BACKBOARD AT SECOND FLOOR.
3. 30A/2P NON-FUSED DISCONNECT SWITCH IN NEMA 3R ENCLOSURE. MAKE FINAL CONNECTION TO EQUIPMENT IN "LFMC" RACEWAY.
4. 30A/3P MANUAL MOTOR CONTROLLER SNAP SWITCH (WITHOUT OVERLOAD PROTECTION) IN NEMA 1 ENCLOSURE, P&S #7803W OR EQUAL. MOUNT ADJACENT TO UNIT AND MAKE FINAL FLEXIBLE CONNECTION TO EQUIPMENT.
5. PROVIDE (3) #12, #12G, 1/2"C BETWEEN ASSOCIATED OUTDOOR AND INDOOR A/C UNITS.
6. COORDINATE REQUIREMENTS FOR FOOD SERVICE EQUIPMENT WITH EQUIPMENT PROVIDED. SEE FOOD SERVICE DRAWINGS FOR ADDITIONAL INFORMATION.
7. FOR DATA OUTLETS, PROVIDE 4x4 BOX WITH 3/4" CONDUIT TO BACKBOARD. VERIFY LOCATIONS WITH OWNER. CABLE AND TERMINATIONS TO BE BY OWNER.
8. PROVIDE JUNCTION BOX FOR SIGNAGE BY OWNER AND MAKE CONNECTIONS AS REQUIRED. VERIFY LOCATION AND REQUIREMENTS WITH OWNER.
9. PROVIDE 4' x 4' PLYWOOD BACKBOARD FOR TELECOM EQUIPMENT. PROVIDE (2) 2" CONDUITS TO JUNCTION BOX AT EXTERIOR WALL.
10. ROUTE 120V CIRCUIT FOR HOT WATER RECIRCULATION PUMP THROUGH ADJACENT AQUASTAT. PROVIDE 20A/1P SNAP SWITCH ADJACENT TO PUMP AND MAKE FINAL FLEXIBLE CONNECTION. COORDINATE WITH PLUMBING CONTRACTOR.
11. SWITCH EXHAUST FAN WITH ROOM LIGHTS.
12. PROVIDE JUNCTION BOX AND CONDUIT FOR HOOD FIRE SUPPRESSION. SEE DETAIL.
13. CIRCUIT RANGE THROUGH CONTACTOR TO DISCONNECT POWER UPON ACTIVATION OF HOOD FIRE SUPPRESSION SYSTEM.
14. #1/0 GROUNDING ELECTRODE CONDUCTOR TO CONCRETE ENCASED ELECTRODE, UNDERGROUND METAL WATER PIPE, AND OTHER ITEMS PER NEC 250.
15. (3)#500 IN 1/2" CONDUIT.
16. PROVIDE 3" CONDUIT 36" BELOW GRADE TO POWER POLE ON NORTH SIDE OF RED ROCK ROAD. BORE CONDUIT BELOW STREET. COORDINATE REQUIREMENTS WITH EVERGY AND PAY ASSOCIATED FEES.
17. CONNECT MAKEUP AIR FAN PROVIDED BY OTHERS. CIRCUIT THROUGH KITCHEN HOOD CONTROL PANEL. COORDINATE WITH KITCHEN EQUIPMENT SUPPLIER.
18. CONNECT EXHAUST FAN PROVIDED BY OTHERS. CIRCUIT THROUGH KITCHEN HOOD CONTROL PANEL. COORDINATE WITH KITCHEN EQUIPMENT SUPPLIER.

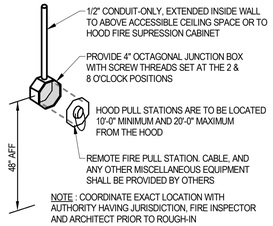

3 HOOD FIRE PULL STATION

Not to scale

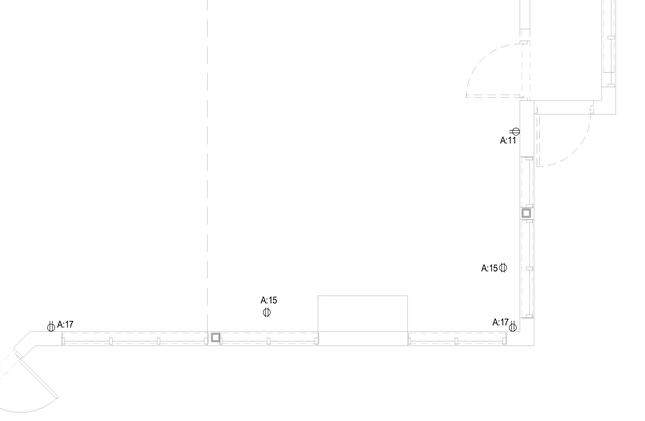

4 ELECTRICAL ONE LINE DIAGRAM

No Scale

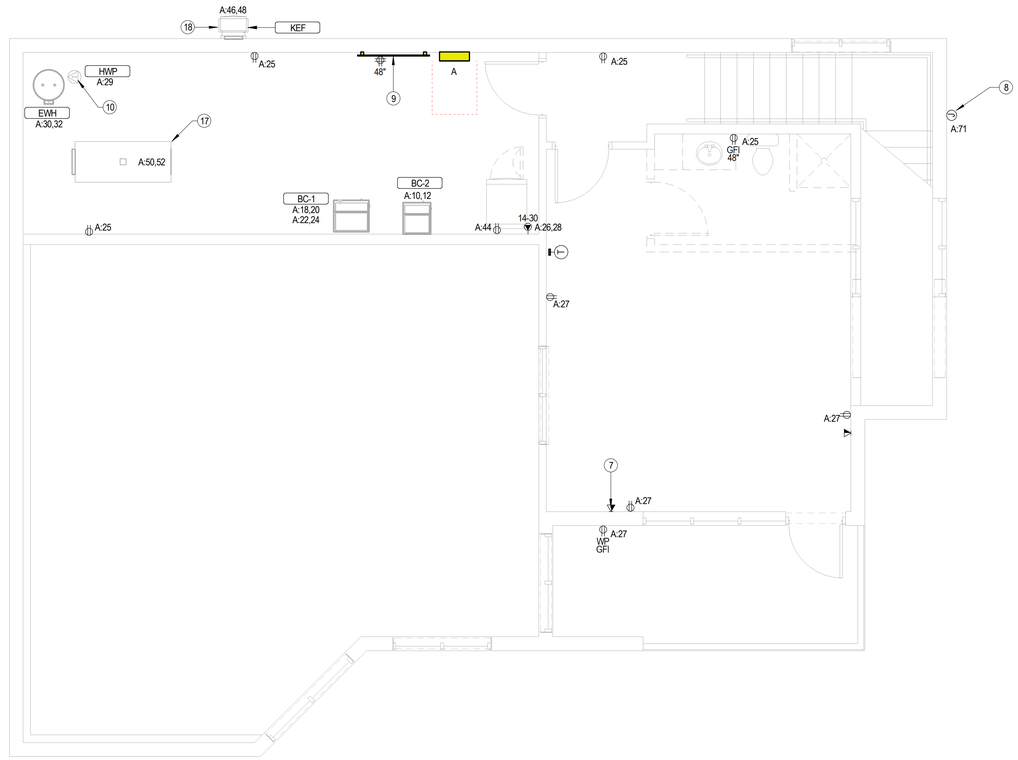

2 UPPER FLOOR POWER PLAN

1/4" = 1'-0"

1 FIRST FLOOR POWER PLAN

1/4" = 1'-0"

LST Consulting Engineers, PA
MANHATTAN
4809 Vue Du Lac Place, Suite 201
Manhattan, KS 66503
785.587.8042
WICHITA
125 S. Washington, Suite 150
Wichita, KS 67202
316.265.0696
www.LSTengineers.com
mail@LSTengineers.com

JonesGillamRenz
730 N. Ninth
Salina, KS 67401
785.827.0386
1881 Main Street, Suite 301
Kansas City, MO 64108
jgr@jgrarchitects.com

Project 24042

08-15-2024

ROOTS COFFEE CO.

9805 S. YODER ROAD

YODER, KANSAS

JOHN F. LEWIS SMITH
14654
KANSAS
PROFESSIONAL ENGINEER

2024.08.21 10:10:52-05'00'

REVISIONS:

DATE: 08-15-2024
JOB: 21-3168
SHEET NO.:

E1.2

COPYRIGHTED ©

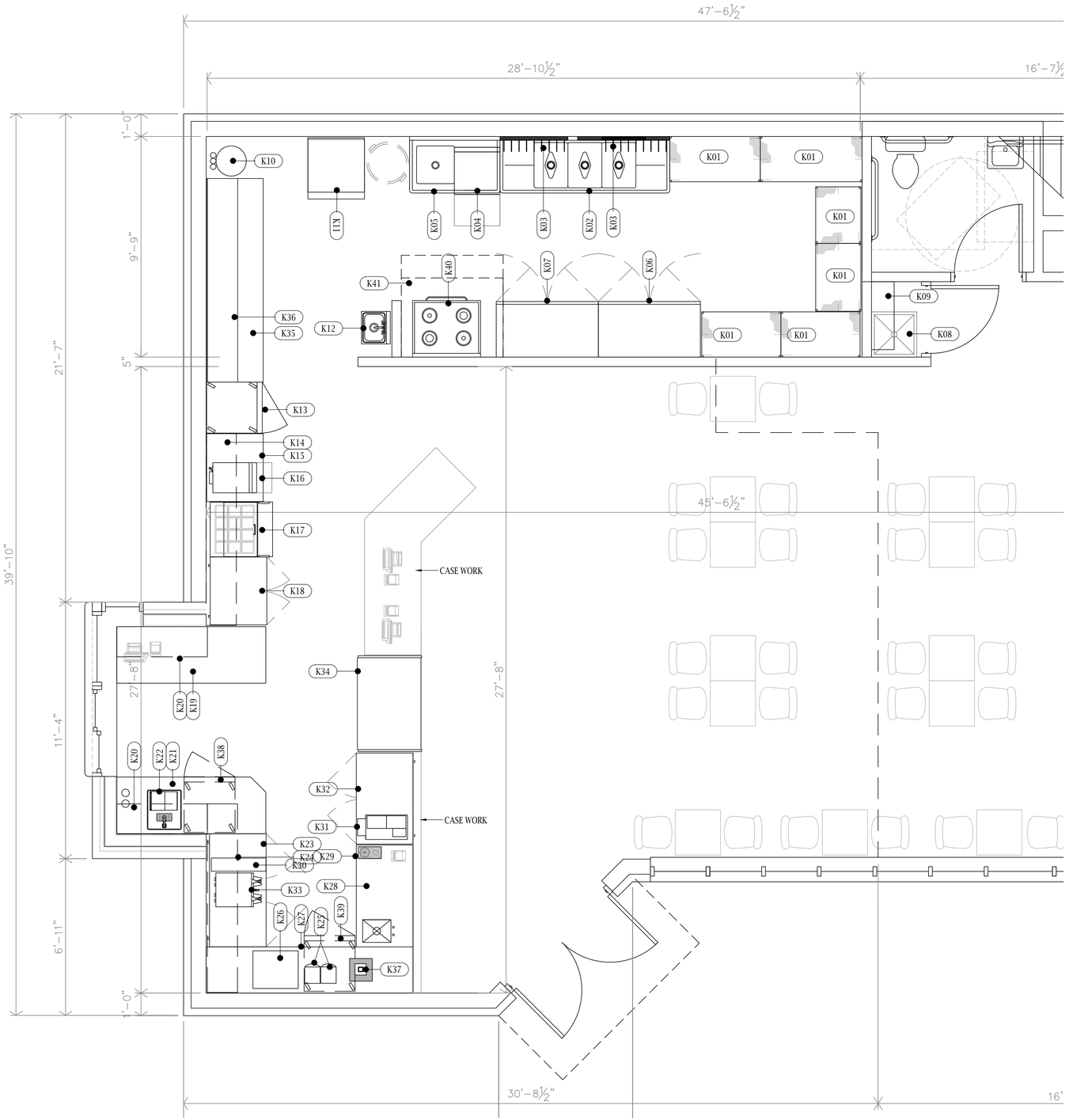

B **FIRST FLOOR**
ENLARGED

EQUIPMENT SCHEDULE				
ITEM	QTY	ITEM	MFG	MODEL
K01	6	SHELVING UNIT, DRY STORAGE	QUANTUM	WR-XXXXGY-5
K02	1	3 COMPARTMENT SINK W/ FAUCET	ADVANCE	FS-3-1824-RL
K03	2	WALL GRID UTENSIL RACK	QUANTUM	SGK4030362GY
K04	1	UNDER COUNTER DISH MACHINE	JACKSON	DISHSTAR HT
K05	1	DISH TABLE, SCRAP SINK W/ FAUCET	ADVANCE	DTUU60-48L
K06	1	REACH-IN COOLER	ATOSA	MBF8005GR
K07	1	REACH-IN COOLER	ATOSA	MBF8005GR
K08	1	MOP SINK & FAUCET	-	-
K09	1	WALL SHELF/ MOP HANGER	ADVANCE	WR86-2424GY-5
K10	1	R.O. WATER SYSTEM & BOOSTER	OPTIPURE	OPS70CR-16
K11	1	ICE MACHINE, BIN, FILTER	HOSHIZAKI	KML500MAJ
K12	1	HAND SINK W/FAUCET, WALL MOUNT	ADVANCE	7PS-EC-SP
K13	1	REACH-IN FREEZER	ATOSA	MBF8002GR
K14	1	WALL SHELF, STAINLESS STEEL	ADVANCE	WS1510816-MOD
K15	1	WORK TABLE, STAINLESS STEEL	ADVANCE	FSS303
K16	1	SPEED OVEN	MERRYCHEF	E1S
K17	1	REFRIGERATED MAKE TABLE	ATOSA	MSF8301GR
K18	1	WORKTOP REFRIGERATOR	ATOSA	MGF36RGR
K19	1	POS/ DRIVE THRU TABLE, STAINLESS STEEL	ADVANCE	FSS307-MOD
K20	2	WALL SHELF, STAINLESS STEEL	ADVANCE	WS1548
K21	1	DRIVE THRU TABLE, STAINLESS STEEL, CUP DISPENSERS	ADVANCE	FSS307-MOD
K22	1	WATER / ICE STATION, DROP-IN	BK	DIWSBL-2118X-P-G
K23	1	WORKTOP REFRIGERATOR	ATOSA	MGF8403GR
K24	1	WALL SHELF, STAINLESS STEEL	ADVANCE	WS1510816-MOD
K25	2	BLENDER	BLENDTEC	C825C11Q-A1DA1A
K26	1	REFRIGERATED COLD WELL, DROP-IN	HATCO	CWB-2-120-QS
K27	1	WORKTABLE, STAINLESS W/ STRAINER TOP	ADVANCE	FSS249-MOD
K28	1	WORKTABLE W/ SINK, FAUCET, KNOCKBOX. STAINLESS STEEL	ADVANCE	FSS305
K29	1	GLASS RINSER, DROP -IN	MICROMATIC	DP120DGR
K30	1	COFFEE GRINDER	MAHLKONIG	GH2
K31	1	ESPRESSO MACHINE	FRANKE	S700
K32	1	WORKTOP REFRIGERATOR	ATOSA	MGF8402GR
K33	1	COFFEE BREWER	CURTIS	G4TP1T10A3100
K34	1	DISPLAY CASE REFRIGERATED	STRUCTURAL CONCEPTS	HMBC4
K35	1	WORK TABLE, STAINLESS STEEL	ADVANCE	FSS308
K36	1	WALL SHELF, STAINLESS STEEL	ADVANCE	WS1510816
K37	1	PITCHER RINSER	BLENDTEC	JRE612
K38	1	UNDER COUNTER REFRIGERATOR	ATOSA	MGF8401GRL
K39	1	UNDER COUNTER FREEZER	ATOSA	MGF8405GR
K40	1	RESIDENTIAL RANGE	-	-
K41	1	EXHAUST SYSTEM	CAPTIVE AIRE	JOB 6689893

GENERAL NOTES

1. THESE PLANS ARE INTENDED TO IDENTIFY TO THE EQUIPMENT LAYOUT AND THE ROUGH-INS FOR THE ELECTRICAL, PLUMBING AND GAS REQUIREMENT FOR THE FOOD SERVICE EQUIPMENT. ROUGH-IN HEIGHTS SHOWN ARE FROM FINISHED FLOOR TO CENTER OF ROUGH-IN WHERE ROUGH-INS ARE SHOWN STUBBED OUT OF FLOOR, THE TOP OF THE ROUGH-IN SHALL NOT EXCEED 5" (INCHES). WHERE POSSIBLE, UTILITIES SHOULD NOT BE STUBBED OUT OF FLOOR. THE SYMBOL SIZES SHOWN IS NOT INTENDED TO REPRESENT THE ACTUAL SIZE OF THE UTILITY. THESE DRAWINGS ARE AS ACCURATE AS CAN BE DETERMINED AT THE TIME OF ISSUE. IT IS THE RESPONSIBILITY OF THE G.C., ALL TRADES AND FOOD SERVICE EQUIPMENT CONTRACTOR (FSEC) TO FIELD DIMENSION AND VERIFY ALL EQUIPMENT LOCATIONS AND ROUGH-INS. ALL WORK IS TO BE PERFORMED IN ACCORDANCE WITH ALL LOCAL AND STATE CODES AND IN COMPLIANCE WITH HEALTH DEPARTMENT CODES.
2. THE SIZE AND LOCATION OF THE GREASE TRAP, HOT WATER HEATER, ELECTRICAL PANEL(S) AND ANY ADDITIONAL FLOOR DRAINS NOT SHOWN ON THESE PLANS ARE TO BE DESIGNED BY THE ARCHITECT / ENGINEER AND SHALL BE SUPPLIED AND INSTALLED BY THE G.C. UTILITIES SHOWN ARE FOR THE FOOD SERVICE EQUIPMENT ONLY. ANY ADDITIONAL UTILITIES FOR OFFICES OR OTHER ROOMS ARE TO BE DESIGNED BY THE ARCHITECT / ENGINEER.
3. ALL PENETRATIONS, CHASES AND CURBS, INCLUDING THE REQUIRED SLEEVES AND FINISHES ARE TO BE PROVIDED BY THE G.C. IN COORDINATION WITH THE FSEC.
4. PRIOR TO FOOD SERVICE EQUIPMENT BEING DELIVERED TO THE JOB SITE, IT IS THE RESPONSIBILITY OF THE G.C. TO PROVIDE THE FOLLOWING:
   A. ADEQUATE AND UNOBSTRUCTED ACCESS TO DESIGNATED AREAS.
   B. TEMPORARY UTILITIES AND ADEQUATE LIGHTING.
   C. FLOORS BROOM SWEPT.
   D. CEILINGS COMPLETED INCLUDING LIGHT FIXTURES AND LAMPS INSTALLED.
   E. ALL FINISHES ON WALLS, FLOORS AND CEILINGS COMPLETED WITH FINAL FINISHES CURED.
5. IT IS THE RESPONSIBILITY OF THE G.C. TO ADVISE ALL TRADES INCLUDING THE FSEC OF ANY CONFLICTS BETWEEN FIELD CONDITIONS AND THESE PLANS.
6. INTERIOR FINISHES TO BE SPECIFIED BY THE ACHITECT/DESIGNER HOWEVER WALL, CEILING AND FLOOR SURFACES SHOULD BE EASILY CLEANABLE, NON-ABSORBENT AND SEALED.
7. IT IS THE RESPONSIBILITY OF EACH TRADE TO WORK FROM THE MOST CURRENT PLANS.
8. IT IS THE RESPONSIBILITY OF THE G.C. TO PULL THE REQUIRED PERMITS AND TO PERFORM ALL WORK IN COMPLIANCE WITH ALL CODES.
9. IT IS THE RESPONSIBILITY OF THE G.C. TO INSTALL, AFFIX, MOUNT AND SEAL ALL PLUMBING FIXTURES SUPPLIED BY THE FSEC. ALL HAND SINKS TO HAVE SOAP AND TOWEL DISPENSERS PROVIDED BY G.C.
10. IT IS THE RESPONSIBILITY OF THE TRADES TO COORDINATE THE MECHANICAL REQUIREMENTS LAYOUT AND SCHEDULE WITH THE EQUIPMENT SPECIFICATIONS.
11. ANY ITEMS THAT REQUIRE MOUNTING, AFFIXING OR SEALING TO THE BUILDING WILL BE INSTALLED BE THE G.C., WALL BACKING WHERE SPECIFIED IS TO BE SUPPLIED AND INSTALLED BY THE G.C. WITH COORDINATION BY THE FOOD SERVICE EQUIPMENT CONTRACTOR AS TO HEIGHTS AND SIZES.
12. EXHAUST & CONDENSATE HOODS:- ALL DUCTWORK, DUCT COLLARS, HANGING RODS, FANS & HOOD INSTALLATION ARE THE RESPONSIBILITY OF THE GENERAL CONTRACTOR, UNLESS OTHERWISE STATED.
13. ALL ROOF STANDS / SUPPORTS / SLEEVES FOR REFRIGERATION EQUIPMENT ARE TO BE PROVIDED AND INSTALLED BY GENERAL CONTRACTOR.
14. IT IS THE RESPONSIBILITY OF THE GENERAL CONTRACTOR TO ORDER A TEST & BALANCE OF THE ENTIRE BUILDING INCLUDING THE KITCHEN EXHAUST HOODS AND FANS TO ENSURE PROPER AIRFLOW IN ALL AREAS.

PINTAIL FOOD SERVICE CONSULTING
611 E CENTRAL AVE, WICHITA, KS 67202
CONSULTANT@PINTAILFSC.COM

ROOTS COFFEE CO.
9805 S. YODER ROAD
YODER, KANSAS

REVISION:

DATE: 9-4-2024
JOB: 21-3168
SHEET NO.:

FS1

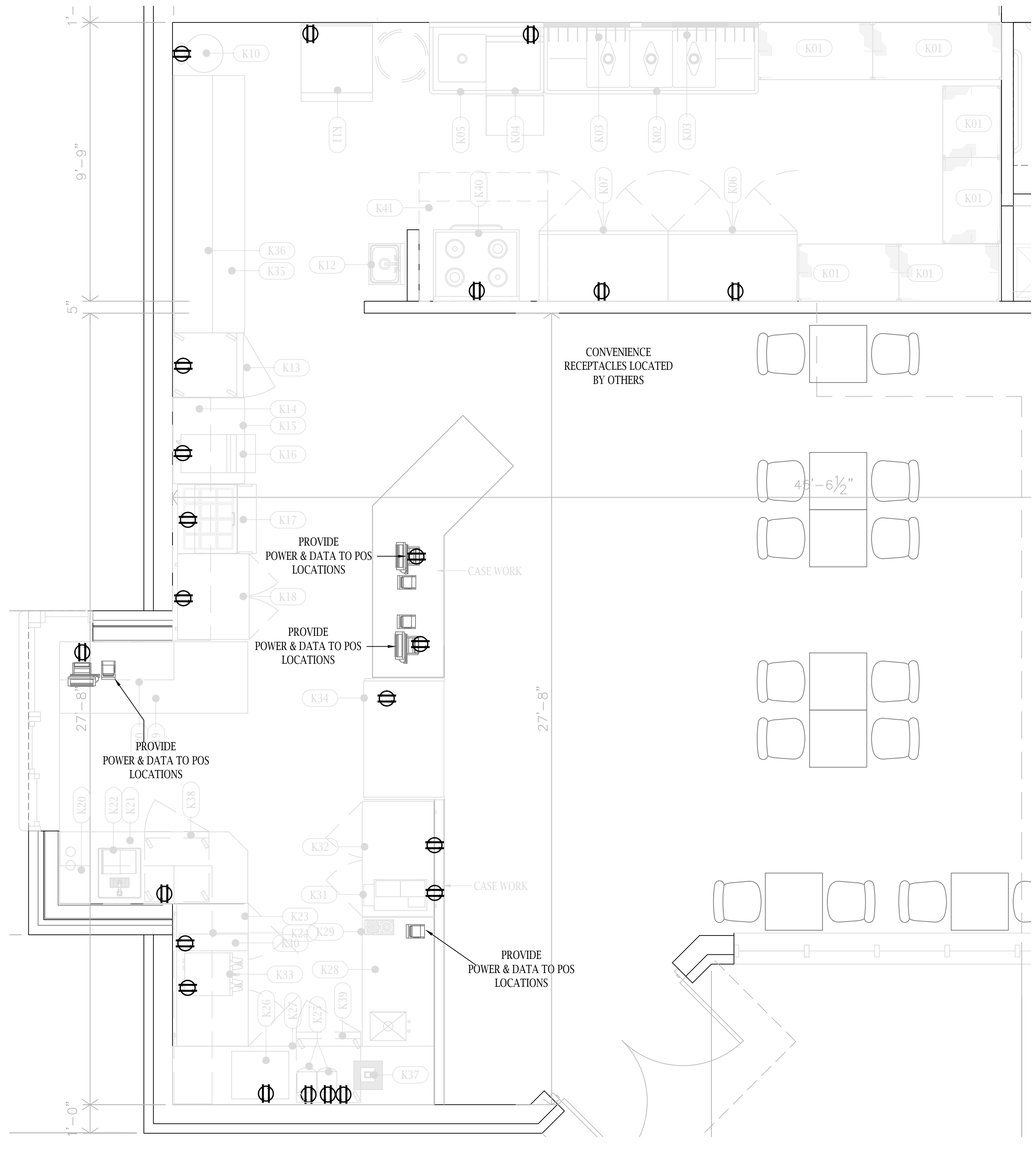

EQUIPMENT SCHEDULE			ELECTRICAL CONNECTIONS					
ITEM	QTY	ITEM	PROVIDER	ITEM	QTY	VOLTAGE	PHASE	AMPS	NOTES
K01	6	SHELVING UNIT, DRY STORAGE	F.S.E.C.	K01	-	-	-	-	-
K02	1	3 COMPARTMENT SINK W/ FAUCET	F.S.E.C.	K02	-	-	-	-	-
K03	2	WALL GRID UTENSIL RACK	F.S.E.C.	K03	-	-	-	-	-
K04	1	UNDER COUNTER DISH MACHINE	F.S.E.C.	K04	1	208	1	37	CORD & PLUG BY ELEC. SUB
K05	1	DISH TABLE, SCRAP SINK W/ FAUCET	F.S.E.C.	K05	-	-	-	-	-
K06	1	REACH-IN COOLER	F.S.E.C.	K06	1	120	1	3.5	-
K07	1	REACH-IN COOLER	F.S.E.C.	K07	1	120	1	3.5	-
K08	1	MOP SINK & FAUCET	PLB SUB	K08	-	-	-	-	-
K09	1	WALL SHELF/ MOP HANGER	F.S.E.C.	K09	-	-	-	-	-
K10	1	R.O. WATER SYSTEM & BOOSTER	VENDOR	K10	1	120	1	10	-
K11	1	ICE MACHINE, BIN, FILTER	F.S.E.C.	K11	1	120	1	7.6	CORD & PLUG BY ELEC. SUB
K12	1	HAND SINK W/FAUCET, WALL MOUNT	F.S.E.C.	K12	-	-	-	-	-
K13	1	REACH-IN FREEZER	F.S.E.C.	K13	1	120	1	8.6	-
K14	1	WALL SHELF, STAINLESS STEEL	F.S.E.C.	K14	-	-	-	-	-
K15	1	WORK TABLE, STAINLESS STEEL	F.S.E.C.	K15	-	-	-	-	-
K16	1	SPEED OVEN	F.S.E.C.	K16	1	208	1	15	-
K17	1	REFRIGERATED MAKE TABLE	F.S.E.C.	K17	1	120	1	2.3	-
K18	1	WORKTOP REFRIGERATOR	F.S.E.C.	K18	1	120	1	2.3	-
K19	1	POS/ DRIVE THRU TABLE, STAINLESS STEEL	F.S.E.C.	K19	-	-	-	-	-
K20	2	WALL SHELF, STAINLESS STEEL	F.S.E.C.	K20	-	-	-	-	-
K21	1	DRIVE THRU TABLE, STAINLESS STEEL, CUP DISPENSERS	F.S.E.C.	K21	-	-	-	-	-
K22	1	WATER / ICE STATION, DROP-IN	F.S.E.C.	K22	-	-	-	-	-
K23	1	WORKTOP REFRIGERATOR	F.S.E.C.	K23	1	120	1	2.3	-
K24	1	WALL SHELF, STAINLESS STEEL	F.S.E.C.	K24	-	-	-	-	-
K25	2	BLENDER	F.S.E.C.	K25	2	120	1	6	-
K26	1	REFRIGERATED COLD WELL, DROP-IN	F.S.E.C.	K26	1	120	1	3.8	-
K27	1	WORKTABLE, STAINLESS W/ STRAINER TOP	F.S.E.C.	K27	-	-	-	-	-
K28	1	WORKTABLE W/ SINK, FAUCET, KNOCKBOX. STAINLESS STEEL	F.S.E.C.	K28	-	-	-	-	-
K29	1	GLASS RINSER, DROP -IN	F.S.E.C.	K29	-	-	-	-	-
K30	1	COFFEE GRINDER	VENDOR	K30	1	120	1	5	-
K31	1	ESPRESSO MACHINE	VENDOR	K31	1	208	1	30	-
K32	1	WORKTOP REFRIGERATOR	F.S.E.C.	K32	1	120	1	2.3	-
K33	1	COFFEE BREWER	VENDOR	K33	1	208	1	24	-
K34	1	DISPLAY CASE REFRIGERATED	F.S.E.C.	K34	1	120/208	1	10	-
K35	1	WORK TABLE, STAINLESS STEEL	F.S.E.C.	K35	-	-	-	-	-
K36	1	WALL SHELF, STAINLESS STEEL	F.S.E.C.	K36	-	-	-	-	-
K37	1	PITCHER RINSER	F.S.E.C.	K37	-	-	-	-	-
K38	1	UNDER COUNTER REFRIGERATOR	F.S.E.C.	K38	1	120	1	2.3	-
K39	1	UNDER COUNTER FREEZER	F.S.E.C.	K39	1	120	1	2.3	-
K40	1	RESIDENTIAL RANGE	OWNER	K40	1	208	1	30MCA	-
K41	1	EXHAUST SYSTEM	F.S.E.C.	K41	X	-	-	-	REFER TO SUBMITTAL

LEGEND	
FD	FLOOR DRAIN
FS	FLOOR SINK
	WASTE CONNECTION
C	COLD WATER
H	HOT WATER
	ELECTRICAL CONNECTION

North

B **FIRST FLOOR**
ENLARGED

PINTAIL FOOD SERVICE CONSULTING
611 E CENTRAL AVE, WICHITA, KS 67202
CONSULTANT@PINTAILFSC.COM

ROOTS COFFEE CO.
9805 S. YODER ROAD
YODER, KANSAS

REVISION:

DATE: 9-4-2024
JOB: 21-3168
SHEET NO.:

FS2

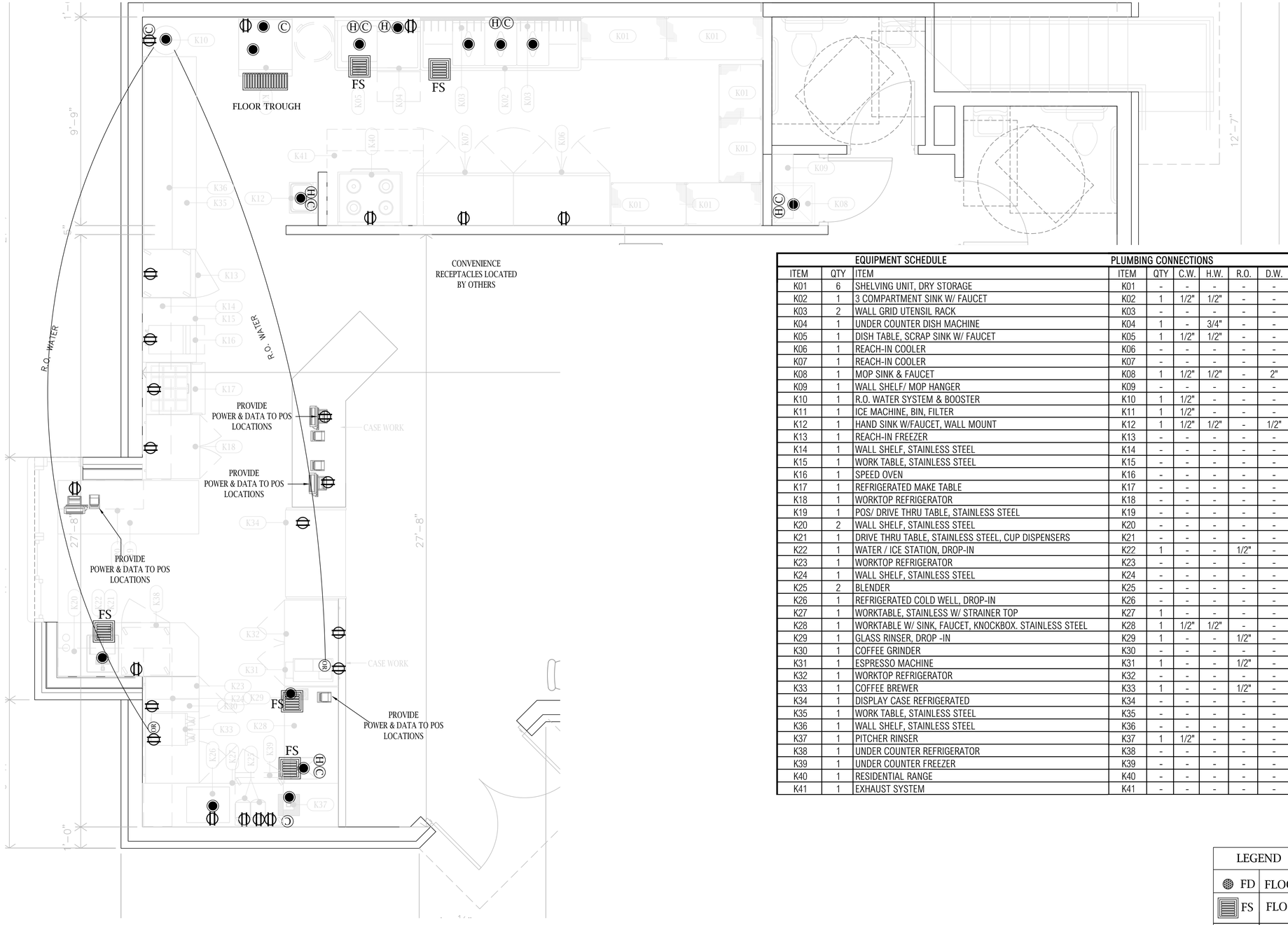

EQUIPMENT SCHEDULE			PLUMBING CONNECTIONS									
ITEM	QTY	ITEM	ITEM	QTY	C.W.	H.W.	R.O.	D.W.	I.D.W.	GAS	B.T.U.	NOTES
K01	6	SHELVING UNIT, DRY STORAGE	K01	-	-	-	-	-	-	-	-	-
K02	1	3 COMPARTMENT SINK W/ FAUCET	K02	1	1/2"	1/2"	-	-	1-1/2"	-	-	-
K03	2	WALL GRID UTENSIL RACK	K03	-	-	-	-	-	-	-	-	-
K04	1	UNDER COUNTER DISH MACHINE	K04	1	-	3/4"	-	-	1"	-	-	-
K05	1	DISH TABLE, SCRAP SINK W/ FAUCET	K05	1	1/2"	1/2"	-	-	1-1/2"	-	-	-
K06	1	REACH-IN COOLER	K06	-	-	-	-	-	-	-	-	-
K07	1	REACH-IN COOLER	K07	-	-	-	-	-	-	-	-	-
K08	1	MOP SINK & FAUCET	K08	1	1/2"	1/2"	-	2"	-	-	-	-
K09	1	WALL SHELF/ MOP HANGER	K09	-	-	-	-	-	-	-	-	-
K10	1	R.O. WATER SYSTEM & BOOSTER	K10	1	1/2"	-	-	-	1"	-	-	-
K11	1	ICE MACHINE, BIN, FILTER	K11	1	1/2"	-	-	-	3/4"	-	-	ROUTE WATER THROUGH FITLER
K12	1	HAND SINK W/FAUCET, WALL MOUNT	K12	1	1/2"	1/2"	-	1/2"	-	-	-	-
K13	1	REACH-IN FREEZER	K13	-	-	-	-	-	-	-	-	-
K14	1	WALL SHELF, STAINLESS STEEL	K14	-	-	-	-	-	-	-	-	-
K15	1	WORK TABLE, STAINLESS STEEL	K15	-	-	-	-	-	-	-	-	-
K16	1	SPEED OVEN	K16	-	-	-	-	-	-	-	-	-
K17	1	REFRIGERATED MAKE TABLE	K17	-	-	-	-	-	-	-	-	-
K18	1	WORKTOP REFRIGERATOR	K18	-	-	-	-	-	-	-	-	-
K19	1	POS/ DRIVE THRU TABLE, STAINLESS STEEL	K19	-	-	-	-	-	-	-	-	-
K20	2	WALL SHELF, STAINLESS STEEL	K20	-	-	-	-	-	-	-	-	-
K21	1	DRIVE THRU TABLE, STAINLESS STEEL, CUP DISPENSERS	K21	-	-	-	-	-	-	-	-	-
K22	1	WATER / ICE STATION, DROP-IN	K22	1	-	-	1/2"	-	1"	-	-	-
K23	1	WORKTOP REFRIGERATOR	K23	-	-	-	-	-	-	-	-	-
K24	1	WALL SHELF, STAINLESS STEEL	K24	-	-	-	-	-	-	-	-	-
K25	2	BLENDER	K25	-	-	-	-	-	-	-	-	-
K26	1	REFRIGERATED COLD WELL, DROP-IN	K26	-	-	-	-	-	-	-	-	-
K27	1	WORKTABLE, STAINLESS W/ STRAINER TOP	K27	1	-	-	-	-	1"	-	-	-
K28	1	WORKTABLE W/ SINK, FAUCET, KNOCKBOX. STAINLESS STEEL	K28	1	1/2"	1/2"	-	-	1-1/2"	-	-	-
K29	1	GLASS RINSER, DROP -IN	K29	1	-	-	1/2"	-	1"	-	-	-
K30	1	COFFEE GRINDER	K30	-	-	-	-	-	-	-	-	-
K31	1	ESPRESSO MACHINE	K31	1	-	-	1/2"	-	-	-	-	-
K32	1	WORKTOP REFRIGERATOR	K32	-	-	-	-	-	-	-	-	-
K33	1	COFFEE BREWER	K33	1	-	-	1/2"	-	-	-	-	-
K34	1	DISPLAY CASE REFRIGERATED	K34	-	-	-	-	-	-	-	-	-
K35	1	WORK TABLE, STAINLESS STEEL	K35	-	-	-	-	-	-	-	-	-
K36	1	WALL SHELF, STAINLESS STEEL	K36	-	-	-	-	-	-	-	-	-
K37	1	PITCHER RINSER	K37	1	1/2"	-	-	-	-	-	-	-
K38	1	UNDER COUNTER REFRIGERATOR	K38	-	-	-	-	-	-	-	-	-
K39	1	UNDER COUNTER FREEZER	K39	-	-	-	-	-	-	-	-	-
K40	1	RESIDENTIAL RANGE	K40	-	-	-	-	-	-	-	-	-
K41	1	EXHAUST SYSTEM	K41	-	-	-	-	-	-	-	-	-

LEGEND	
FD	FLOOR DRAIN
FS	FLOOR SINK
	WASTE CONNECTION
C	COLD WATER
H	HOT WATER
	ELECTRICAL CONNECTION

B **FIRST FLOOR**
ENLARGED

PINTAIL FOOD SERVICE CONSULTING
611 E CENTRAL AVE, WICHITA, KS 67202
CONSULTANT@PINTAILFSC.COM

ROOTS COFFEE CO.
9805 S. YODER ROAD
YODER, KANSAS

REVISION:

DATE: 9-4-2024
JOB: 21-3168
SHEET NO.:
FS3

HOOD INFORMATION – JOB#6689893

HOOD NO	TAG	MODEL	MANUFACTURER	LENGTH	MAX COOKING TEMP	TYPE	APPLIANCE DUTY	DESIGN CFM/FT	TOTAL EXH CFM	EXHAUST PLENUM RISER(S) WIDTH	LENG	HEIGHT	DIA	CFM	VEL	SP	TOTAL SUPPLY CFM	HOOD CONSTRUCTION	HOOD CONFIG END TO END	ROW
1		5424 EX–2–PSP–F	ECON–AIR	4' 0"	600 DEG	I	HEAVY	180	720			4"	8"	720	2063	–0.358"	626	430 SS WHERE EXPOSED	ALONE	ALONE

HOOD INFORMATION

HOOD NO	TAG	FILTER(S) TYPE	QTY	HEIGHT	LENGTH	EFFICIENCY @ 7 MICRONS	LIGHT(S) QTY	TYPE	WIRE GUARD	LOCATION	SIZE	UTILITY CABINET(S) FIRE SYSTEM TYPE	SIZE	ELECTRICAL MODEL #	SWITCHES QUANTITY	FIRE SYSTEM PIPING	HOOD HANGING WEIGHT
1		SS BAFFLE WITH HANDLES	2	16"	20"	30%	2	L55 SERIES E26	NO	RIGHT	20"x54"x24"	TANK FS	4.0	SC–311110MA	1 LIGHT 1 FAN	YES	569 LBS

HOOD OPTIONS

HOOD NO	TAG	OPTION
1		FIELD WRAPPER 17.00" HIGH FRONT, LEFT, RIGHT.
		BACKSPLASH 122.00" HIGH X 104.00" LONG 430 SS VERTICAL.
		RIGHT QUARTER END PANEL 23" TOP WIDTH, 0" BOTTOM WIDTH, 23" HIGH 430 SS.
		LEFT QUARTER END PANEL 23" TOP WIDTH, 0" BOTTOM WIDTH, 23" HIGH 430 SS.
		INSULATION FOR TOP OF HOOD.
		INSULATION FOR BACK OF HOOD.
		RISER SENSOR INSTALL 6IN PLEN.

PERFORATED SUPPLY PLENUM(S)

HOOD NO	TAG	POS	LENGTH	WIDTH	HEIGHT	TYPE	RISER(S) WIDTH	LENG	DIA	CFM	SP
1		Front	68"	12"	6"	MUA	8"	36"		626	0.142"

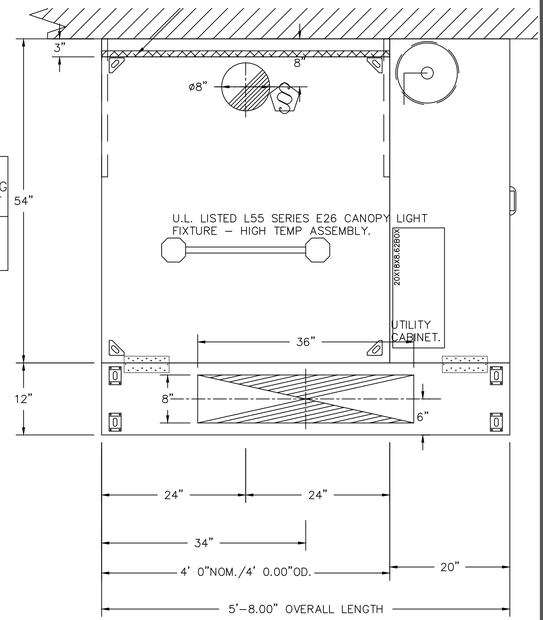

PLAN VIEW – HOOD #1
4' 0.00" LONG 5424EX–2–PSP–F

GREASE DUCT & CHIMNEY SPECIFICATIONS:
PROVIDE GREASE DUCT EQUAL TO ECON–AIR MODEL "EDW"
ROUND 20 GAUGE 430 STAINLESS STEEL DUCTWORK. MODEL "EDW"
IS LISTED TO UL–1978 AND IS INSTALLED USING "V" CLAMP LOCKING
CONNECTIONS SEALED WITH 3M FIRE BARRIER 2000 PLUS. MODEL "EDW"
DOES NOT REQUIRE WELDING PROVIDING IT HAS BEEN INSTALLED PER
THE MANUFACTURES INSTALLATION GUIDE.
PROVIDE RATED ACCESS DOORS AT EVERY CHANGE IN DIRECTION AND EVERY 12' ON CENTER. PER MANUFACTURES LISTING MODEL "EDW"
HORIZONTAL RUNS LESS THAN 75 FT. CAN BE SLOPED 1/16" PER 12", HORIZONTAL RUNS MORE THAN 75 FT. CAN BE SLOPED 3/16" PER 12".
DUCT SHOULD BE SLOPED AS MUCH AS POSSIBLE TO REDUCE THE CHANCE OF GREASE ACCUMULATION IN HORIZONTAL RUNS.

IF THE DUCT OR CHIMNEY IS WITHIN 18 INCHES OF COMBUSTIBLE MATERIAL, PROVIDE UL–2221 OR UL–103 HT LISTED DOUBLE WALL GREASE DUCT OR DOUBLE WALL CHIMNEY EQUAL TO ECON–AIR MODEL "EDW– 2R, 2R TYPE HT, 3R, OR 3Z" ROUND 20 GAUGE 430 STAINLESS INNER DUCT INSULATED WITH A 24 GAUGE 430 STAINLESS OUTER SHELL.

HVAC DISTRIBUTION NOTE

HIGH VELOCITY DIFFUSERS OR HVAC RETURNS SHOULD NOT BE PLACED WITHIN TEN (10) FEET OF THE EXHAUST HOOD. PERFORATED DIFFUSERS ARE RECOMMENDED.

EXHAUST FAN INFORMATION – JOB#6689893

FAN UNIT NO	TAG	QTY	FAN UNIT MODEL #	MANUFACTURER	CFM	ESP	RPM	MOTOR ENCL	HP	BHP	PHASE	VOLT	FLA	DISCHARGE VELOCITY	WEIGHT (LBS)	SONES
1	KEF – 1	1	EADU33H	ECON–AIR	720	0.600	1434	TEAO–ECM	0.333	0.1740	1	208	2.5	356 FPM	75	14.2

MUA FAN INFORMATION – JOB#6689893

FAN UNIT NO	TAG	QTY	FAN UNIT MODEL #	BLOWER	HOUSING	MIN CFM	DESIGN CFM	ESP	RPM	MOTOR ENCL	HP	BHP	PHASE	VOLT	FLA	MCA	MOCP	WEIGHT (LBS)	SONES
2	KSF – 1	1	EA–A1–15D	15MF–1–MOD	A1	–	576	0.400	993	TEAO–ECM	1.000	0.1250	1	208	6.9	9.3A	15A	344	7.4

FAN OPTIONS

FAN UNIT NO	TAG	QTY	DESCRIPTION
1	KEF – 1	1	GREASE BOX
		1	ECM WIRING PACKAGE – PWM SIGNAL FROM ECPM03 PREWIRE (TELCO MOTOR), CCW ROTATION
		1	THROUGH WALL CURB MOUNT INSTALLATION. CURB HEIGHT MUST BE MINIMUM 10" TALLER THAN WALL THICKNESS FOR USE WITH A HINGE KIT
		1	WALL MOUNT CONSTRUCTION FOR FAN
		1	SHIP LOOSE DISCONNECT FOR REMOTE MOUNT
		1	HINGE KIT LOCKING (XHD)– SHIPS LOOSE FOR CURB SUPPLIED BY OTHERS
		1	2 YEAR PARTS WARRANTY
2	KSF – 1	1	GRAVITY BACKDRAFT DAMPER FOR SIZE 1 HOUSING
		1	A1 INDOOR HANGING OPTION – INCLUDES 2 HSA125 HANGING SPRING ISOLATORS PER UNI–STRUT
		1	INSULATION OPTION FOR VBANK FILTER SECTION
		1	ECM WIRING PACKAGE – DD SUPPLY – PWM SIGNAL FROM ECPM03 PREWIRE (TELCO MOTOR)
		1	2 YEAR PARTS WARRANTY

CLEARANCE TO COMBUSTIBLES

HOODS #	SURFACE	*CLEARANCE
1	TOP	0"
	FRONT	0"
	BACK	0"
	LEFT	18"
	RIGHT	0"

– *0" CLEARANCE TO COMBUSTIBLES CONFORMS TO UL710 STANDARD.
– HOOD MOUNTED UTILITY CABINETS REQUIRE 36" SERVICE CLEARANCE.

FAN ACCESSORIES

FAN UNIT NO	TAG	EXHAUST GREASE CUP	EXHAUST GRAVITY DAMPER	EXHAUST WALL MOUNT	SUPPLY SIDE DISCHARGE	SUPPLY GRAVITY DAMPER	SUPPLY MOTORIZED DAMPER	SUPPLY WALL MOUNT
1	KEF – 1	YES						
2	KSF – 1				YES	YES		

CURB ASSEMBLIES

NO	ON FAN	TAG	WEIGHT	ITEM	SIZE
1	# 1	KEF – 1	30 LBS	CURB	19.500"W X 19.500"L X 22.000"H VENTED.

PINTAIL FOOD SERVICE CONSULTING
611 E CENTRAL AVE, WICHITA, KS 67202
CONSULTANT@PINTAILFSC.COM

ROOTS COFFEE CO.
9805 S. YODER ROAD
YODER, KANSAS

REVISION:

DATE: 9–4–2024
JOB: 21–3168
SHEET NO.:
FS4

FAN #2 EA-AT-15D – SUPPLY FAN (KSF – 1)
1. UNTEMPERED SUPPLY UNIT WITH 15" MIXED FLOW DIRECT DRIVE FAN IN SIZE #1 HOUSING.
2. V-BANK EZ FILTERS – INDOOR.
3. SIDE DISCHARGE – AIR FLOW RIGHT –> LEFT.
4. GRAVITY BACK DRAFT DAMPER, 16" WIDE X 18" HIGH, STANDARD GALVANIZED CONSTRUCTION, 1 1/4" REAR FLANGE, FOR SIZE 1 UNTEMPERED FAN HOUSING (5181).
5. INDOOR HANGING CRADLE FOR THE SIZE 1 UNTEMPERED UNIT. 2 HSA125 HANGING ISOLATORS PER UNI-STRUT INCLUDED.
6. "INSULATION" FOR V-BANK INTAKE OPTION.
7. ECM WIRING PACKAGE FOR SUPPLY MOTORS WITH PWM SIGNAL FROM ECPM03 PREWIRE.
8. HINGED DOUBLE WALL INSULATED DOOR ASSEMBLY (BURNER/BLOWER SECTION).
9. 2 YEAR PARTS WARRANTY.

*NOTE: SUPPLY DUCT MUST BE INSTALLED TO MEET SMACNA STANDARDS. A MINIMUM STRAIGHT DUCT LENGTH MUST BE MAINTAINED DOWNSTREAM OF UNIT DISCHARGE AS OUTLINED IN AMCA PUBLICATION 201. WHEN USING RECTANGULAR DUCTWORK, ELBOWS MUST BE RADIUS THROAT, RADIUS BACK WITH TURNING VANES. FLEXIBLE DUCTWORK AND SQUARE THROAT/SQUARE BACK ELBOWS SHOULD NOT BE USED. ANY TRANSITION AND/OR TURNS IN THE DUCTWORK WILL CAUSE SYSTEM EFFECT. SYSTEM EFFECT WILL DRASTICALLY INCREASE STATIC PRESSURE AND REDUCE AIRFLOW. DO NOT RELY ON UNIT TO SUPPORT DUCT IN ANY WAY. FAILURE TO PROPERLY SIZE DUCTWORK MAY CAUSE SYSTEM EFFECTS AND REDUCE PERFORMANCE OF THE EQUIPMENT.
SUGGESTED STRAIGHT DUCT SIZE IS 20" x 20".

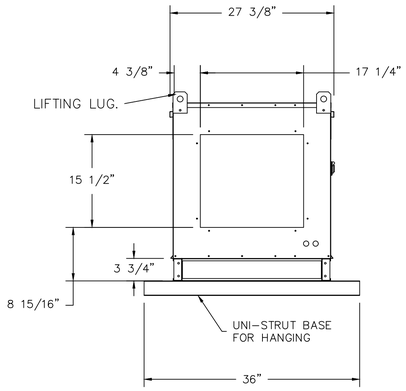

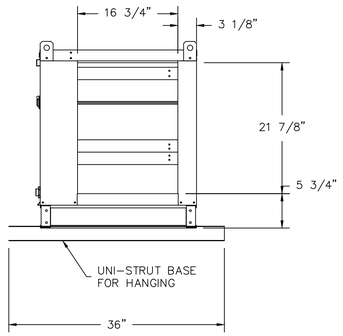

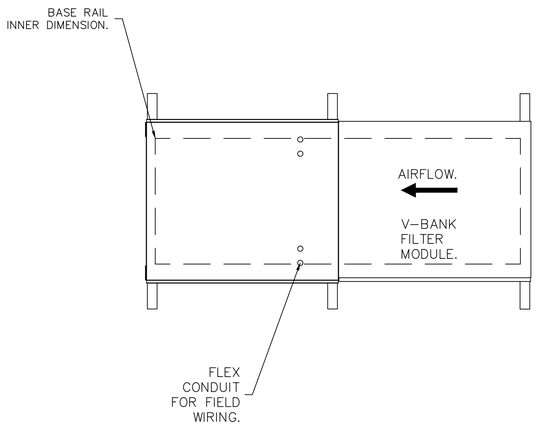

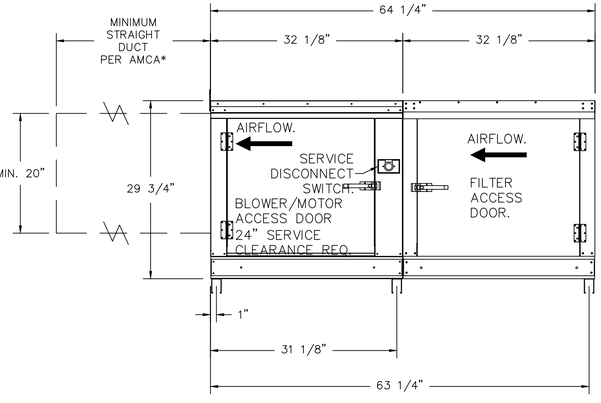

THROUGH WALL CURB INSTALLATION

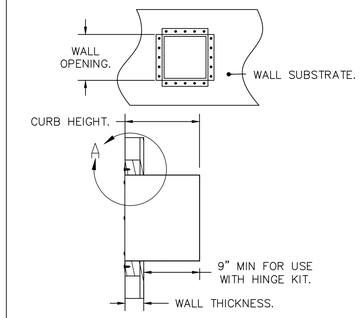

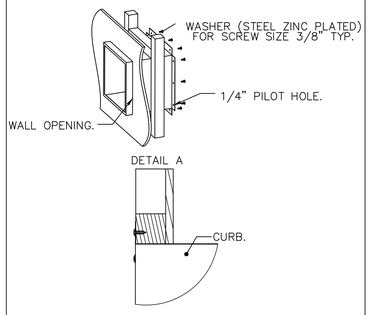

GREASE BOX INSTALLATION

CLOSED POSITION

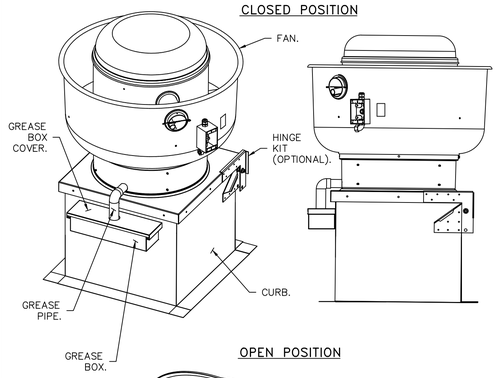

OPEN POSITION

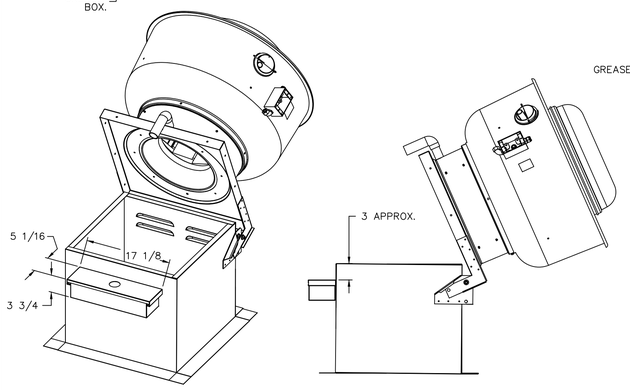

GREASE BOX.
GREASE BOX COVER.
GREASE PIPE.

SHEET METAL SCREWS 3 – LONG (3/4" LG.).

GREASE BOX FIELD INSTALLATION

STEP 1)

ATTACH GREASE BOX COVER TO THE CURB, HOLD 3" DIMENSION AS SHOWN ON PIC. 1. SCREW GREASE BOX COVER TO CURB USING (3) LONG (3/4" LG.) SCREWS AS SHOWN ON PIC. 2.

PIC. 1

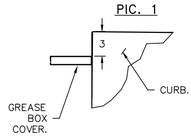

PIC. 2

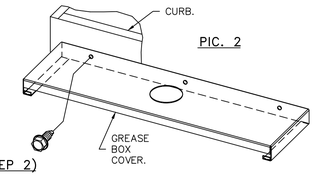

STEP 2)

ATTACH GREASE BOX TO GREASE BOX COVER, SLIDE AND DROP. AS SHOWN ON PIC. 3.

PIC. 3

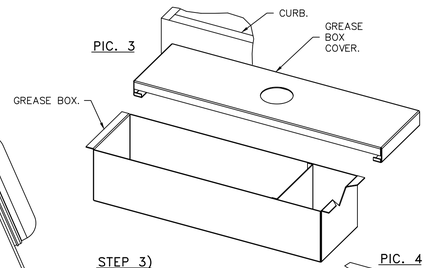

STEP 3)

INSTALL GREASE PIPE AS SHOWN ON PIC. 4.

PIC. 4

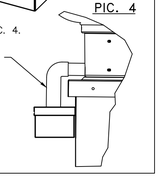

*NOTE: UL 705 INSTALL.

FAN #1 EADU33H – EXHAUST FAN (KEF – 1)

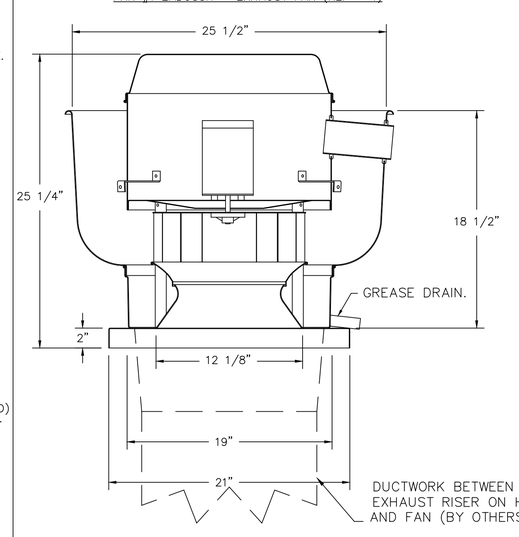

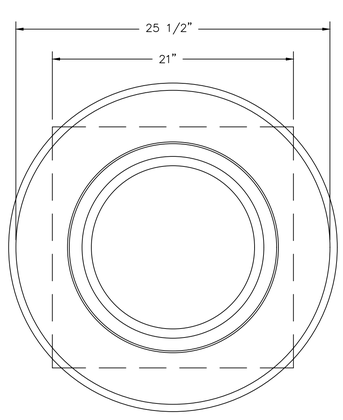

TOP VIEW

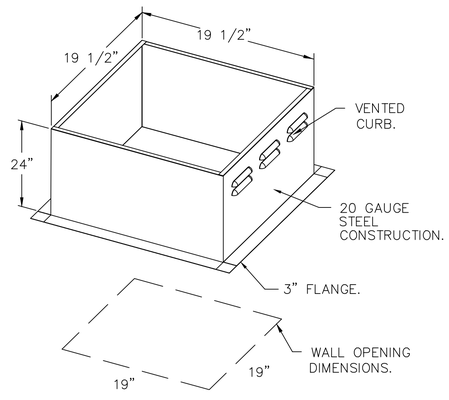

FEATURES:

- DIRECT DRIVE CONSTRUCTION (NO BELTS/PULLEYS).
- ROOF MOUNTED FANS.
- RESTAURANT MODEL.
- UL705 AND UL762 AND ULC-S645
- VARIABLE SPEED CONTROL.
- INTERNAL WIRING.
- THERMAL OVERLOAD PROTECTION (SINGLE PHASE).
- HIGH HEAT OPERATION 300°F (149°C).
- GREASE CLASSIFICATION TESTING.
- NEMA 3R SAFETY DISCONNECT SWITCH.
- 2 YEAR PARTS WARRANTY.

NORMAL TEMPERATURE TEST
EXHAUST FAN MUST OPERATE CONTINUOUSLY WHILE EXHAUSTING AIR AT 300°F (149°C) UNTIL ALL FAN PARTS HAVE REACHED THERMAL EQUILIBRIUM, AND WITHOUT ANY DETERIORATING EFFECTS TO THE FAN WHICH WOULD CAUSE UNSAFE OPERATION.

ABNORMAL FLARE-UP TEST
EXHAUST FAN MUST OPERATE CONTINUOUSLY WHILE EXHAUSTING BURNING GREASE VAPORS AT 600°F (316°C) FOR A PERIOD OF 15 MINUTES WITHOUT THE FAN BECOMING DAMAGED TO ANY EXTENT THAT COULD CAUSE AN UNSAFE CONDITION.

OPTIONS

- GREASE BOX.
- HINGE KIT – SHIPS LOOSE FOR CURB SUPPLIED BY OTHERS.
- ECM WIRING PACKAGE – PWM SIGNAL FROM ECPM03 PREWIRE (TELCO MOTOR), CCW ROTATION.

PINTAIL FOOD SERVICE CONSULTING
611 E CENTRAL AVE, WICHITA, KS 67202
CONSULTANT@PINTAILFSC.COM

ROOTS COFFEE CO.
9805 S. YODER ROAD
YODER, KANSAS

REVISION:	
DATE:	9-4-2024
JOB:	21-3168
SHEET NO.:	FS5

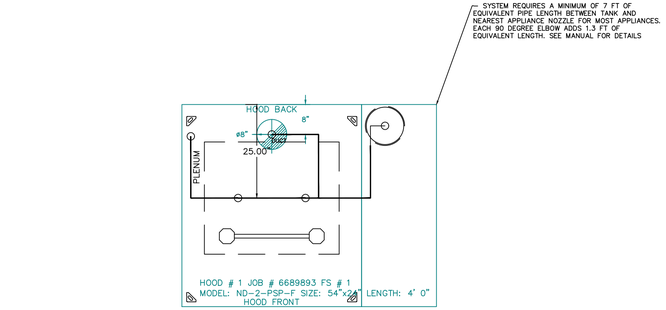

NOTES
- FIELD PIPE DROPS AS SHOWN
  PIPING, ELBOWS, TEES, AND NOZZLES SUPPLIED BY CAS.
- FIELD INSTALLED DROP: FACTORY WILL PROVIDE QTY 2 60IN LONG PIECES OF CHROME PLATED PIPING SHIPPED LOOSE TO BE FIELD-INSTALLED.
- SHIP LOOSE DROP: FACTORY WILL PROVIDE THE EXACT CHROME PIPE LENGTH NEEDED SHIPPED LOOSE TO BE FIELD-INSTALLED.
- RELOCATE NOZZLES IF FLOW PATTERN IS BLOCKED BY SHELVING, SALAMANDERS, ETC.
- OVERLAPPING COVERAGE SHALL NOT BE USED ON ANY APPLIANCE WITH AN OBSTRUCTION.
- IF APPLICABLE, EXTENDED PRE-PIPED DROPS ARE SHIPPED LOOSE.
- FACTORY PIPING EXTENDS A MAXIMUM OF 6" ABOVE THE TOP OF THE HOOD.

- APPLIANCE DIMENSIONS LISTED REPRESENT THE COOKING SURFACE SIZE, NOT THE OVERALL APPLIANCE SIZE.

- THIS FIRE SYSTEM COMPLIES WITH U.L. 300 REQUIREMENTS.

- OL-F NOZZLE PART NUMBER REPLACES 3070-3/8H-10-SS

JOB #: 6689893.
JOB NAME: YODER COFFEE.

SYSTEM SIZE: TANK-SP-1 DESIGN FP: 16. MAXIMUM FP: 20.
HOOD # 1 4" 0.00" LONG x 54" WIDE x 24" HIGH.
RISER # 1 SIZE: 8" DIA.
HOOD # 1 METAL BLOW-OFF CAPS INCLUDED.

- HEAVY-DUTY APPLIANCES (RATED 600°F) WILL REQUIRE AN ADDITIONAL DOWNSTREAM FIRESTAT IN THE EVENT THAT THE DUCTWORK CONTAINS ANY HORIZONTAL RUNS OVER 25 FT IN LENGTH.
- MEDIUM TO LIGHT-DUTY APPLIANCES (RATED 450°F) WILL NOT REQUIRE ANY ADDITIONAL DOWNSTREAM DETECTION.

LEGEND - FIRE CABINET TANK SYSTEM

1 4 GALLON TANK.
2 PRIMARY ACTUATOR RELEASE.
3 SECONDARY ACTUATOR RELEASE.
4 PRESSURE SUPERVISION SWITCH.
5 PRIMARY HOSE ASSEMBLY.
6 SECONDARY HOSE ASSEMBLY.
7 REMOTE MANUAL ACTUATION DEVICE.

INCLUDES: FIELD INSTALLATION AND HOOKUP DURING NORMAL BUSINESS HOURS BY CERTIFIED INSTALLERS ONLY IN THE LOCATION NOTED ABOVE, TWO SITE VISITS ONLY (ONE VISIT TO SET PULL STATION & SYSTEM HOOKUP AND ONE VISIT FOR ONE TEST; ADDITIONAL VISITS WILL RESULT IN ADDITIONAL CHARGES), ONE MECHANICAL OR ELECTRICAL GAS VALVE PER SYSTEM AT A MAXIMUM SIZE OF 2", PERMIT, AND SYSTEM TEST.
EXCLUDES: UNION LABOR & PREVAILING WAGE (LABOR & WAGES WILL BE ADDED IF APPLICABLE), GAS VALVE INSTALLATION, ELECTRICAL HOOKUP AND CONNECTIONS, HANGING OF FIRE CABINET, SHUNT TRIP, HANDHELD EXTINGUISHER(S), ON-SITE RE-PIPING DUE TO EQUIPMENT LAYOUT CHANGES.

GAS VALVES AND STRAINERS

	GAS VALVE SIZING						GAS VALVE DIMENSIONS						INSTALLATION	PART NUMBERS		
	TYPE	SIZE	VOLTAGE	MIN. INLET PRESSURE	MAX. INLET PRESSURE	FLOW AT 1 IN.W.C. DROP NATURAL GAS	FLOW AT 1 IN.W.C. DROP PROPANE	DIM "A"	DIM "B"	DIM "C"	DIM "D"	DIM "F"	DIM "G"	MOUNTING ORIENTATION	GAS VALVE PART NUMBER	STRAINER PART NUMBER	GAS VALVE/STRAINER KIT
GAS VALVE FOR FS#1 →	ELECTRICAL	1"	120 VAC	0 PSI (0 IN.W.C.)	5 PSI (138 IN.W.C.)	1,132,300 BTU/HR	734,733 BTU/HR	6-15/16"	5-15/16"	4-7/8"	5-3/16"	12-13/16"	10-11/16"	HORIZONTAL / VERTICAL	8214250	4417K65	(SC)ECVA1

ALL GAS VALVES/STRAINERS
PROPER CLEARANCE MUST BE PROVIDED IN ORDER TO SERVICE THE STRAINERS A MINIMUM OF 4" CLEARANCE DISTANCE MUST BE PROVIDED AT THE BASE OF THE STRAINER CUSTOMER MUST VERIFY BTU CONSUMPTION AS WELL AS PRESSURE RATING SPECIFIC GRAVITY OF NATURAL GAS = 0.64, SPECIFIC GRAVITY OF LP = 1.52.

CALCULATIONS
TO CALCULATE GAS FLOW FOR OTHER THAN 1 IN.W.C. PRESSURE DROP
NEW BTU/HR = (BTU/HR AT 1 IN.W.C. PRESSURE DROP) X NEW PRESSURE DROP$^{0.5}$
TO CALCULATE GAS FLOW FOR OTHER THAN 0.64 SPECIFIC GRAVITY
NEW BTU/HR = (BTU/HR AT 0.64) X (0.64 / NEW SPECIFIC GRAVITY)$^{0.5}$

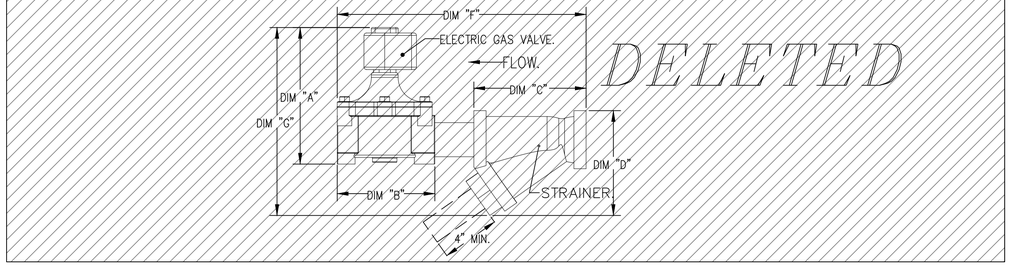

FIRE SYSTEM INFORMATION - JOB#6689893

FIRE SYSTEM NO	TAG	TYPE	SIZE	MAX FP	DESIGN FP	INSTALLATION	
						SYSTEM	LOCATION ON HOOD
1		TANK FS	4.0	20	16	FIRE CABINET RIGHT	RIGHT, HOOD 1

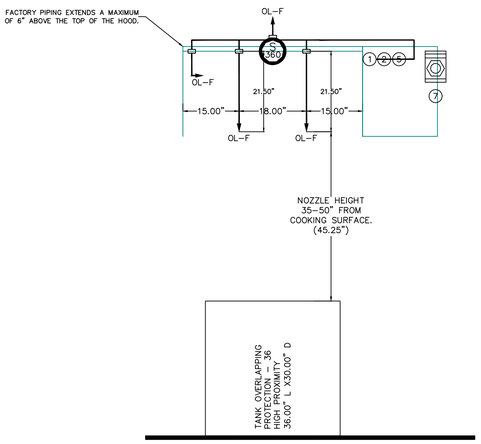

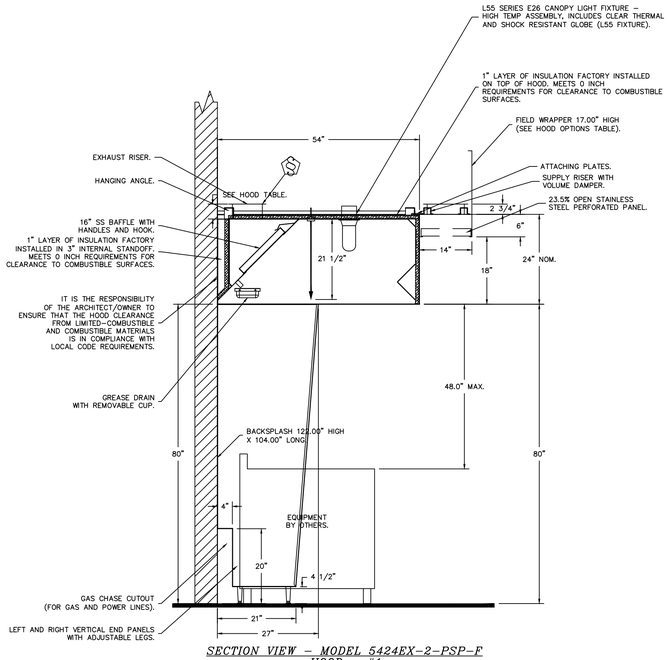

SECTION VIEW - MODEL 5424EX-2-PSP-F HOOD - #1

BACKSPLASH

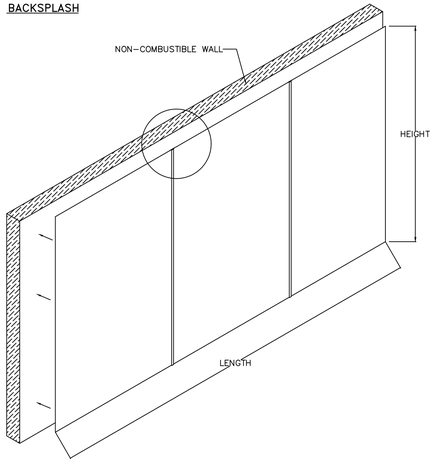

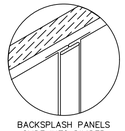

- BACKSPLASH IS NOT INSULATED AND IS UNSUITABLE FOR INSTALL AGAINST COMBUSTIBLE WALLS

FIRE SYSTEM PARTS LIST KEY

FIRE SYSTEM NO	TAG	KEY NUMBER - PART DESCRIPTION	QTY BY FACTORY	QTY BY DIST
1		0 - 0 - TANK FIRE SUPPRESSION POST-DISCHARGE PROCEDURE UTILITY CABINET LABEL SHEET.	1	0
		0 - 0 - TANK FIRE SUPPRESSION MAINTENANCE GUIDE UTILITY CABINET LABEL SHEET.	1	0
		0 - 0 - 12-F28021-32144-OT-360 DUCT FIRE THERMOSTAT WITH 12 FOOT WIRE LEADS. NO, CLOSE ON TEMP RISE AT 360°F.	1	0
		0 - 0 - 32-00002 QUIK SEAL - 1/2" (UL).	1	0
		0 - 0 - 4429K153 1/2" MALE NPT TO 1/2" FEMALE NPT ELBOW, BRASS.	1	0
		0 - 0 - 4429K422 1/2" X 1/4" BRASS REDUCING BUSHING.	1	0
		0 - 0 - 79525 1/2" 90 PRO-PRESS ELBOW WITH 1/2"NPT FEMALE CONNECTION, VIEGA.	1	0
		0 - 0 - 79580 1/2" X 1/2" PRO-PRESS TEE X 1/2"NPT FEMALE CONNECTION, VIEGA.	1	0
		0 - 0 - 87-300001-001 TANK - PRESSURIZED TANK USED FOR TANK FIRE SUPPRESSION.	1	0
		0 - 0 - 87-300030-001 PRIMARY ACTUATOR KIT (PAK) - ACTUATOR AND RELEASE SOLENOID ASSEMBLY, ONE NEEDED PER FIRE SYSTEM, SUPERVISED, TANK FIRE SUPPRESSION.	1	0
		0 - 0 - 87-300152-001 HARDWARE, SVA BOLTS, TANK FIRE SUPPRESSION.	4	0
		0 - 0 - 9055455PC PRO PRESS 1/2 PRESS X PRESS 90 ELBOW LD.	4	0
		0 - 0 - 9097200PC PRO PRESS PC611 1/2 PRESS TEE LD.	3	0
		0 - 0 - 98694A115 HARDWARE, DATANKLOCK LOCKING BRACKET SQUARE NUTS 5/16" ZINC, TANK FIRE SUPPRESSION.	2	0
		0 - 0 - A0034332 JUNCTION BOX FOR MANUAL PULL STATION. 1.5" DEEP BACK BOX, RED COLOR.	1	0
		0 - 0 - A31484 1/4" NPT SCHRADER VALVE AND CAP, JB INDUSTRIES. 1/4" FLARE X 1/4" MPT HALF UNION. USED ON TANK SERVICE PORT.	1	0
		0 - 0 - BI145 3/8" BLACK IRON 90 ELL.	2	0
		0 - 0 - DATANKLOCK DISCHARGE ADAPTER TANK LOCKING PLATE FOR FIRE SYSTEM TANK INSTALLATION IN UTILITY CABINETS, TANK FIRE SUPPRESSION.	1	0
		0 - 0 - TANK STRAP TANK STRAP - USED FOR TANK FIRE SUPPRESSION.	3	0
		0 - 0 - TFS-UCTANKBRACKET TANK BRACKET FOR FIRE SYSTEM TANK INSTALLATION IN UTILITY CABINETS, TANK FIRE SUPPRESSION.	1	0
		0 - 0 - WK-283952-000 DISCHARGE ADAPTER, TANK FIRE SUPPRESSION.	1	0
		16 - 16 - 79210 1/2" X 3/8" NPT MALE ADAPTER, VIEGA.	4	0
		16 - 16 - OL-F NOZZLE - TANK PROTECTION APPLIANCE COVERAGE NOZZLE (INCLUDES METAL BLOW OFF CAP, LANYARD, USED WITH CHROME-PLATED PIPE).	4	0
		26 - 26 - QSA-3/8 QUIK SEAL - 3/8" (UL).	4	0
		34 - 34 - A0034331 24VDC SINGLE ACTION MANUAL ACTUATION DEVICE (PUSH/PULL STATION) WITH PROTECTIVE COVER, ONE (1) NORMALLY OPEN CONTACT. RED COLOR.	1	0

GAS VALVE(S)

FIRE SYSTEM NO	TAG	TYPE	SIZE	SUPPLIED BY
1		SC ELECTRICAL	1.000	ECON-AIR

DELETED

PINTAIL FOOD SERVICE CONSULTING
611 E CENTRAL AVE, WICHITA, KS 67202
CONSULTANT@PINTAILFSC.COM

ROOTS COFFEE CO.
9805 S. YODER ROAD
YODER, KANSAS

REVISION:

DATE: 9-4-2024
JOB: 21-3168
SHEET NO.:
FS6