LST Consulting Engineers, PA
MANHATTAN
4809 Vue Du Lac Place, Suite 201
Manhattan, KS 66503
785.587.8042
WICHITA
125 S. Washington, Suite 150
Wichita, KS 67202
316.285.0696
www.LSTengineers.com
mail@LSTengineers.com

Project 24034 **11/15/2024**

Electrical Abbreviations

1P	1 Pole (2P, 3P, 4P, ETC.)
A, Amp	Ampere
AC	Above Counter
ACLG	Above Ceiling
ADO	Automatic Door Opener
AF	Amp Frame
AFF	Above Finished Floor
AFG	Above Finished Grade
AFI	Arc Fault Circuit Interrupter
AGI	Combination Arc and Ground Fault Circuit Interrupter
AHU	Air Handling Unit
AL	Aluminum
ALT	Alternate
AMP	Ampere
AMPL	Amplifier
ANNUN	Annunciator
APPROX	Approximately
AQ-STAT	Aquastat
ARCH	Architect, Architectural
AS	Amp Switch
AT	Amp Trip
ATS	Automatic Transfer Switch
AUTO	Automatic
AUX	Auxiliary
AV	Audio Visual
AWG	American Wire Gauge
BATT	Battery
BD	Board
BLDG	Building
BMS	Building Management System
C	Conduit
CAB	Cabinet
CAT	Catalog
CATV	Cable Television
CB	Circuit Breaker
CCTV	Closed Circuit Television
CKT	Circuit
CLG	Ceiling
COMB	Combination
CMPR	Compressor
CONN	Connection
CONST	Construction
CONT	Continuation Or Continuous
CONTR	Contractor
CONV	Convector
CP	Circulating Pump
CRT	Cathode-Ray Tube
CT	Current Transformer
CTR	Center
CU	Copper
DCP	Domestic Water Circulating Pump
DEPT	Department
DET	Detail
DIA	Diameter
DISC	Disconnect
DIST	Distribution
DN	Down
DPR	Damper
DS	Safety Disconnect Switch
DT	Double Throw
DWG	Drawing
EC	Electrical Contractor
ELEC	Electric, Electrical
ELEV	Elevator
ELU	Emergency Lighting Unit
EM	Emergency
EMS	Energy Management System
EMT	Electrical Metallic Tubing
EP	Electric Pneumatic
EQUIP	Equipment
EWC	Electric Water Cooler
EXIST	Existing
EXH	Exhaust
EXP	Explosion Proof
FA	Fire Alarm
FABP	Fire Alarm Booster Power Supply Panel
FACP	Fire Alarm Control Panel
FCU	Fan Coil Unit
FIXT	Fixture
FLR	Floor
FLUOR	Fluorescent
FU	Fuse
FUDS	Fused Safety Disconnect Switch
GA	Gauge
GAL	Gallon
GALV	Galvanized
GC	General Contractor
GEN	Generator
GFI	Ground Fault Circuit Interrupter
GFP	Ground Fault Protector
GND	Ground
GRS	Galvanized Rigid Steel (Conduit)
GYP BD	Gypsum Board
HOA	Hands-Off-Automatic Switch
HORIZ	Horizontal
HP	Horsepower
HPF	High Power Factor
HT	Height
HTG	Heating
HTR	Heater
HV	High Voltage
HVAC	Heating, Ventilating And Air Conditioning
IC	Interrupting Capacity
IG	Isolated Ground
IMC	Intermediate Metal Conduit
INCAND	Incandescent
IR	Infrared
I/W	Interlock With
J-BOX	Junction Box
KV	Kilovolt
KVA	Kilovolt-Ampere
KVAR	Kilovolt-Ampere Reactive
KW	Kilowatt
KWH	Kilowatt Hour
LOC	Locate Or Location
LT	Light
LTG	Lighting
LTNG	Lightning
LV	Low Voltage
MAX	Maximum
MAG.S	Magnetic Starter
M/C	Momentary Contact
MC	Mechanical Contractor
MCB	Main Circuit Breaker
MCC	Motor Control Center
MDC	Main Distribution Center
MDP	Main Distribution Panel
MFR	Manufacturer
MFS	Main Fused Disconnect Switch
MH	Manhole
MIC	Microphone
MIN	Minimum
MISC	Miscellaneous
MLO	Main Lugs Only
MMS	Manual Motor Starter
MOA	Multioutlet Assembly
MSP	Motor Starter Panelboard
MSBD	Main Switchboard
MSS	Motor Starter Switch
MT	Mount
MT.C	Empty Conduit
MTS	Manual Transfer Switch
MTR	Motor, Motorized
N.C.	Normally Closed
NEC	National Electrical Code
NEMA	National Electrical Manufacturer's Association
NFDS	Non-Fused Safety Disconnect Switch
NIC	Not In Contract
NL	Night Light
N.O.	Normally Open
NPF	Normal Power Factor
NTS	Not To Scale
OC	On Center
OH	Overhead
OL	Overloads
PA	Public Address
PB	Pull Box Or Pushbutton
PE	Pneumatic Electric
PED	Pedestal
PF	Power Factor
PH	Phase
PIV	Post Indicating Valve
PNL	Panel
PP	Power Pole
PR	Pair
PRI	Primary
PROJ	Projection
PRV	Power Roof Ventilator
PT	Potential Transformer
PVC	Polyvinyl Chloride (Conduit)
PWR	Power
QUAN	Quantity
RCPT	Receptacle
REQD	Required
RM	Room
RSC	Rigid Steel Conduit
RTU	Roof Top Unit
SC	Surface Conduit
SEC	Secondary
SHT	Sheet
SIM	Similar
SLD	Single-Line Diagram
S/N	Solid Neutral
SPEC	Specification
SPKR	Speaker
SP	Spare
SPP	Single-Point Power
SR	Surface Raceway
SS	Stainless Steel
SSW	Selector Switch
S/S	Stop/Start Pushbuttons
STA	Station
STD	Standard
SURF	Surface Mounted
SW	Switch
SWBD	Switchboard
SYM	Symmetrical
SYS	System
TEL	Telephone
TERM	Terminal
TL	Twist Lock
TR	Tamper Resistant
T-STAT	Thermostat
TTC	Telephone Terminal Cabinet
TV	Television
TVTC	Television Terminal Cabinet
TYP	Typical
UC	Under Counter
UE	Underground Electrical
UG	Underground
UH	Unit Heater
UT	Underground Telephone
UTIL	Utility
UV	Ultraviolet
V	Volt
VA	Volt-Amperes
VDT	Video Display Terminal
VERT	Vertical
VFD	Variable Frequency Drive
VOL	Volume
W	Watt
W/	With
WG	Wire Guard
WH	Water Heater
W/O	Without
WP	Weatherproof
XFMR	Transformer
XFR	Transfer
∠	Angle
@	At
▲	Delta
'	Feet
"	Inches
#	Number
Ø	Phase
C	Center Line
P	Plate

Electrical Symbol Legend

Lighting Symbols

- Lighting Fixtures, Typical, Rectangular (Various Symbols)
  Filled circles indicate recessed.
  Open circles indicate surface-mounted.
  Diagonal line indicates lensed.
  Outer dots indicate suspended.
- Lighting Fixtures, Typical, Round (Various Symbols)
  Center dot indicates pendant.
  Diagonal line indicates lensed.
  Chevron indicates wall wash.
- Wall-mounted fixtures, Typical (Various Symbols)
- Strip Fixture
- Directional Light, Track Light, Flood Light
- Linear Light, Tape Light
- Emergency Lighting Unit, Ceiling-Mounted, Integral Battery
- Emergency Lighting Unit, Ceiling-Mounted, Remote Battery
- Emergency Lighting Unit, Wall-Mounted, Integral Battery
- Emergency Lighting Unit, Wall-Mounted, Remote Battery
- Exit Light, Ceiling-Mounted.
  Shading and arrows indicate faces and directional chevrons.
- Exit Light, Wall-Mounted.
  Shading and arrows indicate faces and directional chevrons.
- Exit/ELU Combo
- Pole/Area Lights
- Post-Top Area Light
- Bollard Light
- Diagonal hatch indicates light on a critical circuit.
- Solid hatch indicates light on an emergency or life safety circuit.
- $ Single-Pole Switch
- $ Two-Pole Switch
- $ Three-Pole Switch

Switch Modifiers:

3: 3-Way	OS: Occupancy Sensor
4: 4-Way	VS: Vacancy Sensor
K: Keyed	CT: Above-Counter
D: Dimming	LV: Low-Voltage
T: Timer	M: Motor-Rated

- Lighting Contactor
- LC Lighting Control Panel
- OS Occupancy Sensor
- DL Daylight Harvesting Sensor

Lighting Tags

A
MDP:1a

- Top Value: Fixture Type ID (Underlined)
- Bottom Value, Lowercase Letter: Switch ID
- Bottom Value, Number(s): Circuit Number
- Bottom Value, Uppercase Letter(s): Panel

Absence of a switch designation on a lighting fixture indicates fixture is controlled by the only switch in the space. An "x" in place of the switch designation indicates unswitched.

$a, OSa, DLa: Switch ID indicated by a lowercase letter. Switch IDs are unique per space. A switch with an ID "a" controls all devices within the space in which it is located tagged with "a". A switch without a tagged ID controls all lighting fixtures within a space. ID tags may be used on control devices other than switches, such as occupancy sensors or contactors.

Grounding and Lightning Protection Symbols

- Ground Rod
- Ground Rod with Test Well
- Static Ground Receptacle
- Lightning Protection Air Terminal
- Lightning Protection Conductor Splice

Power Symbols

Wall Ceiling Floor

- Simplex Receptacle
- Duplex Receptacle
- Quadruplex Receptacle
- Special Receptacle, Type as Indicated

Receptacle Modifiers:
##": Height AFF
CT: Mounted Above Counter Top
GFI: Ground-Fault Circuit Interrupter
WP: Weatherproof In-Use Cover

- Half shading indicates split (typically switched)
- Outside shading indicates emergency circuit
- Center shading indicates isolated ground
- Multioutlet Assembly
  Filled squares indicate 120V outlet
  Open squares indicate with USB
- Cord Reel, Device Varies
- Drop Cord, Device Varies
- J Junction Box
- F1 Floor Box, see schedule for type
- Emergency Power Off
- DO Door Opener Push Plate
- M Power Meter
- Safety Switch, Fused
- Safety Switch, Unfused
- Motor Starter
- Combination Starter/Disconnect
- Contactor

Power Device and Equipment Tags

LP1A1a

Electrical DeviceTags: Uppercase letter(s) indicates Panel ID and circuit number. Lowercase letter indicates designation of controlling switch (where applicable).

XX-1

Equipment Tags: Equipment ID is indicated by an underlined tag adjacent to the equipment. See the equipment connection schedule for description, electrical requirements, and panel and circuit number. Symbols/graphic appearance of equipment varies.

Wiring

Solid, arced lines connecting equipment, devices, or fixtures indicate unswitched power circuiting. Wires are only intended to indicate to what circuit devices are connected. Actual connections, circuit routing, installtion, junction boxes, etc. shall be field-determined by the contractor.

Dashed, arced lines connecting equipment, devices, or fixtures indicate switched power.

Home run to branch circuit panelboard. The equipment name and circuit number(s) are indicated, separated by a hyphen. Homeruns are only intended to indicate panel and circuit number. Actual homerun location shall be field-determined by the contractor.

Power Distribution Equipment

SB1 MDP HP1A LP1A

Hatched fill indicates distribution panel or switchboard.
Solid fill indicates branch panel or load center.
Dashed box indicates code-required clearance (width and depth).
Door indicates front of recessed panel.

Devices and fixtures are tagged with Panel and circuit number. For example, a device tagged with "A:1" indicates the device is circuited to panel designated "A," circuit number 1.

T1

Transformer: Typically transformer names begin with or contain the letter "T". See Single-Line Diagram for description and requirements.

Telecom Symbols

Wall Ceiling Floor

- Data Outlet
- Telephone Outlet
- Data/Telephone Outlet

Outlet Modifiers:
##": Height AFF OC
CT: Mounted Above Counter Top

- Wireless Access Point
- TV TV Outlet

Nurse Call Symbols

- N Nurse Call Corridor Light
  Number of lights as indicated
- X Nurse Call Device
  B: Code Blue
  D: Duty Station
  E: Emergency
  P: Patient Call
  S: Staff
- XXXX Nurse Call Control Unit
  NCAP: Nurse Call Annunciator Panel
  NCHS: Nurse Call Host Constroller
  NCPA: Nurse Call Power Supply
  NCTC: Nurse Call Terminal Cabinet
  NCUPS: Uninterruptable Power Supply

Security Symbols

- Security Camera
  PTZ: Pan/Tilt/Zoom
- CR Card Reader
- CK Card Reader with Keypad
- CC TV Closed Circuit TV Outlet
- DC Door Contact
- ES Electric Strike
- IC Intercom
- ML Magnetic Lock
- RX Request to Exit Button
- REX Request to Exit Sensor
- MD Motion Detector
- XXX Security Control Unit
  SCP: Security Control Panel
  SPS: Security Power Supply Unit

Construction Phasing

(Typical All Symbols and Equipment)

- Existing to Remain
- Existing to Be Demolished
- New

Miscellaneous

- Area Not in Contract
- Note by Symbol
- Callout:
  Top Value: Detail Number on Sheet
  Bottom Value: Sheet Number of Detail
- Room 1 Room Name and Number

Fire Alarm Symbols

- P Manual Pull Station
- F Horn, Wall
- F Horn, Ceiling
- Strobe, Wall, Candela as indicated
- Strobe, Ceiling, Candela as indicated
- Horn/Strobe, Wall, Candela as indicated
- Horn/Strobe, Ceiling, Candela as indicated
- Remote Indicator w/ Test Switch, Wall
- Remote Indicate w/ Test Switch, Ceiling
- Smoke Detector
- Heat Detector
- CO Carbon Monoxide Detector
- T R Beam Detector T: Transmitter R: Receiver
- Combination Detector (Up to Three)
- Duct Smoke Detector
- Smoke Damper
- Door Holder
- DCL Door Closer
- Fire Service Phone
- XXX Addressible Module
  AIM: Addressible Input Module
  AOM:Addressible Output Control Module
  AIO: Addressible Input/Output Module
- CM Fire Alarm Control Unit
  EVAC: Voice Evacuation Control Panel
  FAA: Fire Alarm Annunciator
  FACP: Fire Alarm Control Panel
  FATC: Fire Alarm Terminal Cabinet
  NACP: Notification Appliance Circuit Panel
  FAMN: Fire Alarm Mass Notification Control Panel
- XX Supervisory or Interface Device
  PIV: Post Indicator Valve Supervisory
  PS: Pressure Switch
  R: Non-Addressible Relay
  VS: Valve Supervisory Switch
  WF: Water Flow Switch

GENERAL ELECTRICAL NOTES

A. COORDINATE INSTALLATION OF ELECTRICAL WORK ABOVE THE CEILING TO PROVIDE THE GREATEST POSSIBLE CLEARANCE FOR INSTALLATION OF PLUMBING AND MECHANICAL INSTALLATION. CONDUITS SHALL BE ROUTED THROUGH JOIST WEBS WHERE POSSIBLE.
B. VERIFY EXACT PLACEMENT OF ALL LUMINAIRES, DEVICES, AND EQUIPMENT SHOWN ON THE ELECTRICAL CONSTRUCTION DOCUMENTS WITH ARCHITECTURAL, MECHANICAL AND PLUMBING DRAWINGS PRIOR TO FINAL PLACEMENT.
C. ELECTRICAL EQUIPMENT AND DEVICES SHALL BE "LISTED" AND "IDENTIFIED" AS RATED FOR A MINIMUM OF 75°C CONDUCTOR TERMINATION.
D. DEFINITION OF TERMS
"SHALL": ACTION THAT IS REQUIRED WITHOUT OPTION OR QUALIFICATION.
"FURNISH": CONTRACTOR SHALL BE RESPONSIBLE FOR OBTAINING.
"INSTALL": CONTRACTOR SHALL BE RESPONSIBLE FOR LABOR AND CONSTRUCTION EQUIPMENT NECESSARY TO SET IN PLACE. CONNECT, CALIBRATE AND TEST EQUIPMENT FURNISHED BY HIM OR OTHERS.
"PROVIDE": CONTRACTOR SHALL FURNISH AND INSTALL.

MOUNTING HEIGHT REQUIREMENTS:

UNLESS SPECIFICALLY INDICATED OTHERWISE, THE FOLLOWING MOUNTING HEIGHTS SHALL APPLY:

• RECEPTACLES	16" TO BOTTOM
• TELECOMMUNICATIONS OUTLETS	16" TO BOTTOM
• LIGHT SWITCHES	48" TO TOP
• THERMOSTATS	48" TO TOP
• HUMIDISTATS	48" TO TOP
• FIRE ALARM PULL STATIONS	48" TO TOP
• FIRE ALARM NOTIFICATION DEVICES	LOWER OF: 88" TO BOTTOM OR TOP AT 6" BELOW CEILING

GENERAL LIGHTING NOTES

A. THE CIRCUITING OF ALL LUMINAIRES HAS BEEN SHOWN ON THE PLANS, AND THE CONTRACTOR SHALL FOLLOW THIS CIRCUITING LAYOUT.
B. CIRCUIT ALL EMERGENCY LIGHTS, NIGHT LIGHTS AND EXIT LIGHTS TO AN UNSWITCHED HOT CONDUCTOR, UPSTREAM OF ALL CONTROLS.
C. DIRECT CURRENT POWER WIRING FROM EXIT SIGNS TO REMOTE EXTERIOR EMERGENCY LIGHTING HEADS SHALL BE (2) #10 IN 1/2" CONDUIT UNLESS NOTED OTHERWISE.
D. IN AREAS WHERE CEILING MOUNTED OCCUPANCY SENSORS ARE USED FOR LIGHTING CONTROL IN CONJUNCTION WITH WALL SWITCHES, OCCUPANCY SENSOR/POWER PACK SHALL SWITCH LEG SHALL BE WIRED IN SERIES WITH WALL SWITCHES TO PROVIDE OVERRIDE "OFF" CONTROL FOR LIGHTS.
E. CONTROL WIRING FOR 0-10 V-dc DIMMING SIGNAL CIRCUITS SHALL BE NEC CLASS 1, ROUTED IN SAME RACEWAY/CABLE WITH LIGHTING CIRCUIT POWER CONDUCTORS. WIRING SHALL CONSIST OF (2) #16 SOLID CU THHN OR TFN CONDUCTORS. CONDUCTOR INSULATION COLOR SHALL BE VIOLET (+ V-dc) AND PINK (- V-dc). WHERE MC-CABLE IS USED FOR FINAL 6' POWER CONNECTION WHIP TO LUMINAIRE, UTILIZE "LUMINARY" TYPE MC-CABLE WITH INTEGRAL CLASS 1 CONTROL WIRING.

GENERAL POWER NOTES

A. THE CIRCUITING OF ALL DEVICES HAS BEEN SHOWN ON THE PLANS, AND THE CONTRACTOR SHALL FOLLOW THIS CIRCUITING LAYOUT.
B. VERIFY EXACT LOCATIONS OF HVAC AND PLUMBING EQUIPMENT WITH THE GENERAL CONTRACTOR AND ASSOCIATED SUBCONTRACTORS. COORDINATE CONDUIT STUB-UP AND POWER CONNECTIONS PRIOR TO COMMENCING ROUGH-IN WORK. ELECTRICAL DEVICES (DISCONNECTS, RECEPTACLES, ETC.) INSTALLED ON EQUIPMENT SHALL BE MOUNTED ON A NON-REMOVABLE PANEL OF THE EQUIPMENT. FIELD COORDINATE EXACT DEVICE MOUNTING LOCATIONS PRIOR TO INSTALLATION.
C. WALL MOUNTED HVAC CONTROL DEVICES (THERMOSTATS, TEMPERATURE SENSORS, HUMIDISTATS, CO_2 SENSORS, ETC) SHALL BE PROVIDED BY MECHANICAL CONTRACTOR. UNLESS NOTED OTHERWISE, ELECTRICAL CONTRACTOR SHALL PROVIDE SINGLE GANG WALL BOX WITH 1/2" CONDUIT STUBBED OUT TO ABOVE ACCESSIBLE CEILING WITH NYLON BUSHINGS AND PULLSTRING IN RACEWAY. REFER TO MECHANICAL DRAWINGS FOR LOCATIONS OF DEVICES.

GENERAL TELECOMMUNICATIONS NOTES

A. PROVIDE THE FOLLOWING RACEWAY ROUGH-IN FOR TELECOMMUNICATIONS OUTLET TYPES INDICATED:
- WALL PHONE OUTLET: 2"x4"x2-1/8" DEEP DEVICE BOX WITH (1) 3/4" CONDUIT TO ABOVE ACCESSIBLE CEILING.
- PHONE/DATA OUTLET: 4-11/16" SQUARE x 3-1/4" DEEP BOX (RACO #260 OR EQUAL) WITH 1-GANG DEVICE RING AND 1-1/4" CONDUIT TO ABOVE ACCESSIBLE CEILING.
- TV OUTLET: 4-11/16" SQUARE x 3-1/4" DEEP BOX (RACO #260 OR EQUAL) WITH 2-GANG DEVICE RING AND (1) 2" CONDUIT TO ABOVE ACCESSIBLE CEILING.

B. PROVIDE NYLON BUSHINGS FOR ALL CONDUIT ENDS NOT CONNECTED TO A BOX OR FITTING TO PROTECT CABLING FROM DAMAGE.
C. CONDUITS FROM EACH OUTLET SHALL BE STUBBED 2" ABOVE THE FINISHED CEILINGS IN AREAS WITH ACCESSIBLE TILES. IN AREAS WITH OPEN CEILINGS, STUB CONDUIT INTO STRUCTURAL JOIST SPACE.
D. PROVIDE BLANK, STAINLESS STEEL COVER PLATES FOR ALL OUTLETS NOT ACTIVATED BY OWNER.
E. PROVIDE SUITABLE PULL STRING IN ALL CONDUITS.
F. ALL TELECOMMUNICATIONS AND A/V CABLING, JACKS, CONNECTORS, TERMINATIONS, EQUIPMENT AND TESTING SHALL BE PROVIDED BY OWNER.

GENERAL FIRE ALARM NOTES

A. FIRE ALARM CABLING SHALL BE INSTALLED IN CONDUIT WHERE EXPOSED, INACCESSIBLE, AND WHERE SUBJECT TO PHYSICAL DAMAGE.
B. DUCT TYPE SMOKE DETECTORS SHALL BE FURNISHED AND WIRED BY FIRE ALARM CONTRACTOR, INSTALLED IN DUCT BY MECHANICAL CONTRACTOR.
C. FIRE ALARM SYSTEM HVAC SHUT DOWN RELAYS SHALL BE PROVIDED AND WIRED TO FIRE ALARM CONTROL PANEL BY FIRE ALARM CONTRACTOR. LOCATE RELAYS WITHIN 5' OF HVAC EQUIPMENT AND PROVIDE CONDUIT WITH PULL STRING FROM RELAY TO EQUIPMENT. UNIT SHUT DOWN CONTROL WIRING SHALL BE PROVIDED BY MECHANICAL CONTRACTOR.
D. AT LOCATION OF SMOKE DAMPERS AND COMBINATION FIRE/SMOKE DAMPERS, PROVIDE DUCT OR AREA SMOKE DETECTOR (AS SHOWN ON PLANS) WITHIN 5' OF DAMPER AND WIRE TO FIRE ALARM CONTROL PANEL. PROVIDE FIRE ALARM RELAY FOR CONTROL OF 120V POWER TO DAMPER ACTUATOR. DAMPER SHALL CLOSE UPON DETECTION OF SMOKE.
E. IN ADDITION TO VALVES INSTALLED ON FIRE SPRINKER SYSTEM RISER, ALL VALVES INSTALLED OUTSIDE THE BUILDING (POST INDICATOR VALVE, TAPPING SLEEVE VALVE, ETC.) SHALL BE SUPERVISED BY THE FIRE ALARM SYSTEM. PROVIDE ADDRESSABLE MONITORING MODULE AND SURGE PROTECTION DEVICE (DITEK #DTK-2MHLP48B) FOR EACH MONITORED VALVE. COORDINATE WITH GC AND SITE WORK CONTACTOR FOR ALL VALVES INSTALLED. MONITORING IS NOT REQUIRED FOR VALVES INSTALLED IN ROADWAY BOXES BY THE MUNICIPALITY/PUBLIC UTILITY.

Electrical Sheet List

E0.1	ELECTRICAL TITLE SHEET
E1.1	ELECTRICAL PLANS
E1.2	ELECTRICAL PLANS
E1.3	SPECIAL SYSTEMS PLANS
E1.4	SPECIAL SYSTEMS PLANS
E4.1	ENLARGED ELECTRICAL UNIT PLANS
E6.1	ELECTRICAL SCHEDULES AND DETAILS
E6.2	ELECTRICAL LOADS AND RISERS
E6.3	ELECTRICAL SCHEDULES

JonesGillamRenz
730 N. Ninth
Salina, KS 67401
785.827.0386
1881 Main Street, Suite 301
Kansas City, MO 64108
jgr@jgrarchitects.com

RESIDENCE AT GREEN MEADOW

NEW SENIOR LIVING FACILITY

SAN ANGELO, TEXAS

STATE OF TEXAS
TIMOTHY C. TREDWAY
95252
LICENSED PROFESSIONAL ENGINEER
11-15-2024

REVISIONS:

DATE: 11/15/2024
JOB: 24-3395
SHEET NO.:

E0.1

COPYRIGHTED ©

NOTES BY SYMBOL

1 INSTALL RECEPTACLE ON WALL OF ELEVATOR PIT. VERIFY EXACT LOCATION WITH ELEVATOR EQUIPMENT INSTALLER.
2 SWITCH EXHAUST FAN WITH ROOM LIGHTS.
3 PROVIDE NEMA6-20R RECEPTACLE FOR CORD AND PLUG CONNECTION OF PTAC. VERIFY RECEPTACLE CONFIGURATION WITH PTAC SUPPLIED BY MECHANICAL CONTRACTOR. INSTALL RECEPTACLE CONCEALED IN UNIT SUB-BASE.
4 ROUTE CIRCUIT THROUGH CONTACTOR INDICATED ON DETAIL 2:E6.1.
5 PROVIDE 30A/2P, SINGLE THROW, MANUAL MOTOR CONTROLLER SNAP SWITCH IN NEMA 1 ENCLOSURE. HUBBELL #HBL78420 OR EQUAL. MAKE FINAL FLEXIBLE CONNECTION TO BLOWER COIL/ELECTRIC HEAT.
6 ROUTE 120V CIRCUIT FOR HOT WATER RECIRCULATION PUMP THROUGH ADJACENT AQUASTAT. PROVIDE 20A/1P SNAP SWITCH ADJACENT TO PUMP AND MAKE FINAL FLEXIBLE CONNECTION. COORDINATE WITH PLUMBING CONTRACTOR.
7 30A/2P NON-FUSED DISCONNECT SWITCH IN NEMA 3R ENCLOSURE. MAKE FINAL CONNECTION TO EQUIPMENT IN LFMC RACEWAY.
8 120V POWER FOR FIRE SPRINKLER SYSTEM FLOW SWITCH(ES) AND BELL. PROVIDE #8 CU BONDING JUMPER FROM CIRCUIT EQUIPMENT GROUNDING CONDUCTOR TO METAL SPRINKLER SYSTEM PIPING AT AN ACCESSIBLE LOCATION PER NEC 250.104(B). COORDINATE WORK WITH FIRE SPRINKLER SYSTEM INSTALLER.
9 PROVIDE 120V POWER CONNECTION TO ELEVATOR SUMP PUMP ALARM PANEL AND 1" CONDUIT WITH PULL STRING STUBBED INTO ELEVATOR PIT FOR CONTROL CABLING. COORDINATE ALL WORK WITH PLUMBING CONTRACTOR.
10 2-HOUR DIAL TIMER OVERRIDE SWITCH FOR SWITCHED RECEPTACLES. SEE 2:E6.1.
11 ONE RECEPTACLE SHALL BE CONNECTED TO CIRCUIT P1:2 (UNCONTROLLED) AND THE OTHER RECEPTACLES SHALL BE CONNECTED TO CIRCUIT P1:4 (CONTROLLED). CONTROLLED RECEPTACLE SHALL BE MARKED IN ACCORDANCE WITH NEC 406.3(E).
12 TIMECLOCK AND CONTACTORS FOR EXTERIOR LIGHTING AND OFFICE RECEPTACLE CONTROL, RE: 2:E6.1.
13 INSTALL LUMINAIRE ON WALL OF ELEVATOR PIT. VERIFY EXACT LOCATION WITH ELEVATOR EQUIPMENT INSTALLER. INSTALL LIGHT SWITCH ADJACENT TO PIT LADDER AT 48" ABOVE FLOOR LANDING.
14 ELECTRIC SERVICE EQUIPMENT, SEE RISER DIAGRAM ON SHEET E6.2.

GENERAL ELECTRICAL NOTES

A. ELECTRICAL EQUIPMENT AND DEVICES SHALL BE "LISTED" AND "IDENTIFIED" AS RATED FOR A MINIMUM OF 75°C CONDUCTOR TERMINATION.

B. THE CIRCUITING OF ALL LIGHT AND RECEPTACLE OUTLETS HAS BEEN SHOWN ON THE PLANS, AND THE CONTRACTOR SHALL FOLLOW THIS CIRCUITING LAYOUT .

C. CIRCUIT ALL EMERGENCY LIGHTS, NIGHT LIGHTS AND EXIT LIGHTS TO AN UNSWITCHED HOT CONDUCTOR , UPSTREAM OF ALL CONTROLS.

D. WALL MOUNTED HVAC CONTROL DEVICES (THERMOSTATS, TEMPERATURE SENSORS, ETC) SHALL BE PROVIDED BY MECHANICAL CONTRACTOR. UNLESS NOTED OTHERWISE, ELECTRICAL CONTRACTOR SHALL PROVIDE SINGLE GANG WALL BOX AT 46" AFF AND 1/2" CONDUIT STUBBED OUT TO ABOVE ACCESSIBLE CEILING WITH NYLON BUSHINGS AND PULLSTRING IN RACEWAY. REFER TO MECHANICAL DRAWINGS FOR LOCATIONS OF DEVICES.

E. COORDINATE INSTALLATION OF ELECTRICAL WORK ABOVE THE CEILING TO PROVIDE THE GREATEST POSSIBLE CLEARANCE FOR INSTALLATION OF PLUMBING AND MECHANICAL INSTALLATION. CONDUITS SHALL BE ROUTED THROUGH JOIST WEBS WHERE POSSIBLE.

F. VERIFY EXACT PLACEMENT OF ALL DEVICES SHOWN ON THE ELECTRICAL CONSTRUCTION DOCUMENTS WITH ARCHITECTURAL, MECHANICAL AND PLUMBING DRAWINGS PRIOR TO FINAL PLACEMENT.

G. PROVIDE TAMPER PROOF RECEPTACLES IN DWELLING UNITS PER NEC REQUIREMENTS.

H. DEFINITION OF TERMS
* SHALL - ACTION THAT IS REQUIRED WITHOUT OPTION OR QUALIFICATION.
* FURNISH -CONTRACTOR SHALL BE RESPONSIBLE FOR OBTAINING.
* INSTALL - CONTRACTOR SHALL BE RESPONSIBLE FOR LABOR AND CONSTRUCTION EQUIPMENT NECESSARY TO SET IN PLACE, CONNECT, CALIBRATE AND TEST EQUIPMENT FURNISHED BY HIM OR OTHERS.
* PROVIDE -CONTRACTOR SHALL FURNISH AND INSTALL

LST Consulting Engineers, PA
MANHATTAN
4809 Vue Du Lac Place, Suite 201
Manhattan, KS 66503
785.587.8042
WICHITA
125 S. Washington, Suite 150
Wichita, KS 67202
316.285.0696
www.LSTengineers.com
mail@LSTengineers.com

Project 24034 11/15/2024

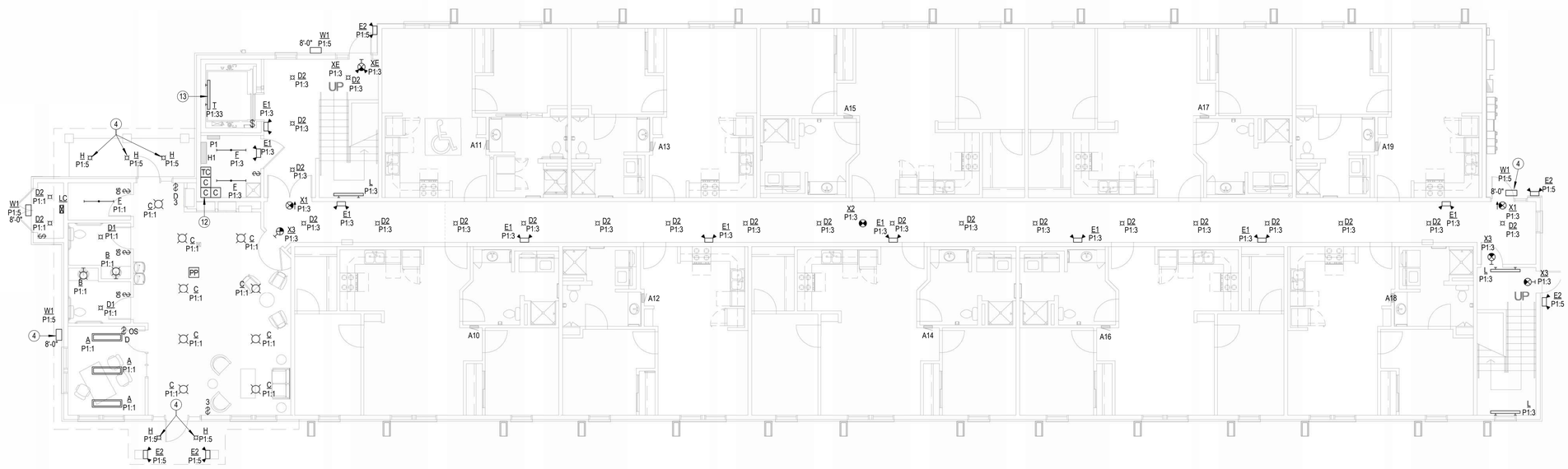

2 E1.1 FIRST FLOOR LIGHTING PLAN
1/8" = 1'-0"

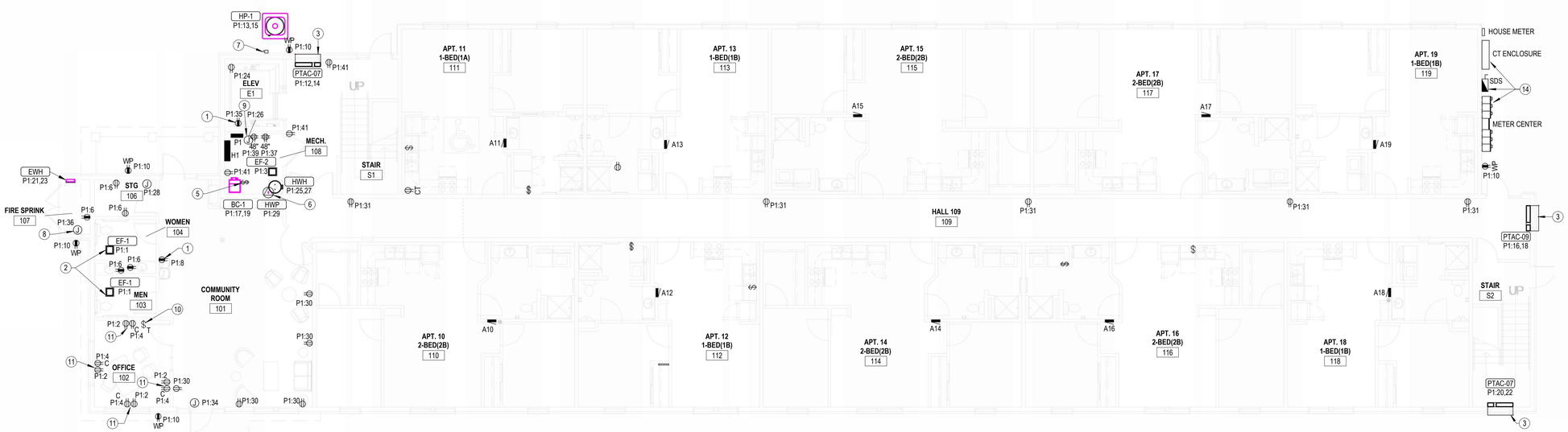

1 E1.1 FIRST FLOOR POWER PLAN
1/8" = 1'-0"

JonesGillamRenz
730 N. Ninth
Salina, KS 67401
785.827.0386
1881 Main Street, Suite 301
Kansas City, MO 64108
jgr@jgrarchitects.com

RESIDENCE AT GREEN MEADOW
NEW SENIOR LIVING FACILITY
SAN ANGELO, TEXAS

STATE OF TEXAS
TIMOTHY C. TREDWAY
95252
LICENSED
PROFESSIONAL ENGINEER
11-15-2024

REVISIONS:

DATE: 11/15/2024
JOB: 24-3395
SHEET NO.:

E1.1

COPYRIGHTED ©

LST Consulting Engineers, PA
MANHATTAN
4809 Vue Du Lac Place, Suite 201
Manhattan, KS 66503
785.587.8042
WICHITA
125 S. Washington, Suite 150
Wichita, KS 67202
316.285.0696
www.LSTengineers.com
mail@LSTengineers.com

Project 24034 **11/15/2024**

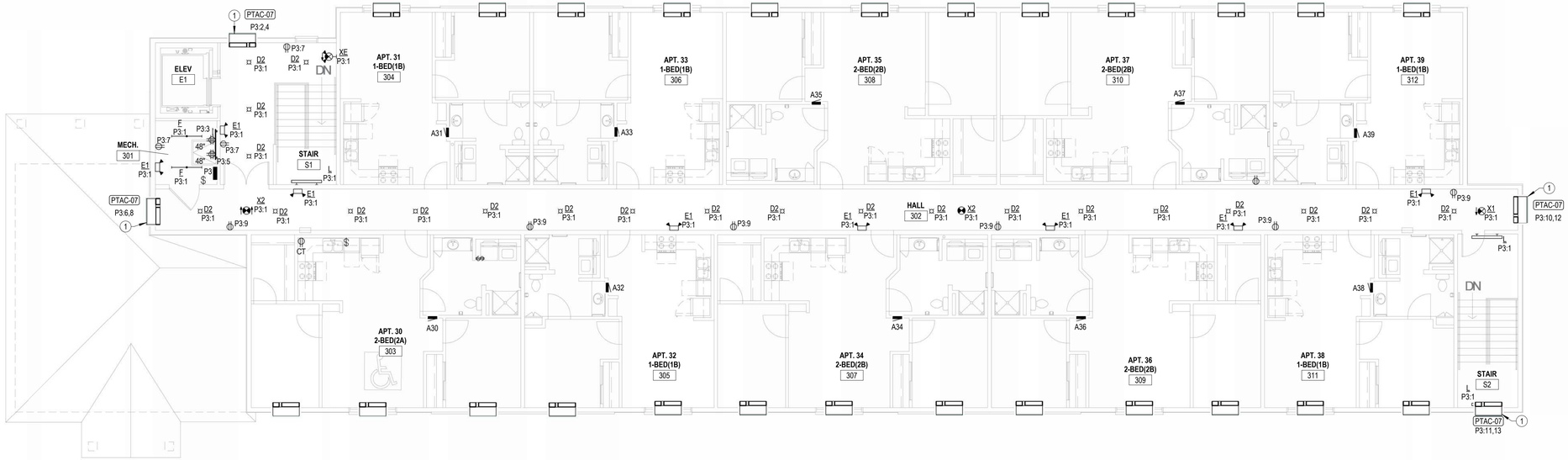

2 / E1.2 THRID FLOOR ELECTRICAL PLAN
1/8" = 1'-0"

NOTES BY SYMBOL

1. PROVIDE NEMA6-20R RECEPTACLE FOR CORD AND PLUG CONNECTION OF PTAC. VERIFY RECEPTACLE CONFIGURATION WITH PTAC SUPPLIED BY MECHANICAL CONTRACTOR. INSTALL RECEPTACLE CONCEALED IN UNIT SUB-BASE.
2. INSTALL TOP OF PTAC 12" BELOW FINISHED CEILING. COORDINATE INSTALLATION WITH ARCHITECT AND G.C.
3. 30A DISCONNECT SWITCH, LOCKABLE IN "OFF" POSITION, WITH SOLID NEUTRAL AND (1) 20A DUAL-ELEMENT, TIME DELAY FUSE IN NEMA 1 ENCLOSURE FOR ELEVATOR CAB LIGHTS & EXHAUST. MOUNT AT 6'-0" AFF TO TOP AND LABEL WITH CORRESPONDING ELEVATOR CAR NUMBER AND CIRCUIT NUMBER. COORDINATE EXACT MOUNTING LOCATION AND REQUIREMENTS WITH ELEVATOR EQUIPMENT INSTALLER. PROVIDE FINAL ELECTRICAL CONNECTION TO ELEVATOR CONTROLLER.
4. ELEVATOR POWER MODULE SWITCH: 400A/208V/3P SWITCH COMPLETE WITH 225A DUAL ELEMENT, TIME DELAY CLASS 'J' FUSES, 120V CONTROL TRANSFORMER, FIRE ALARM SAFETY INTERFACE RELAY, KEY TEST SWITCH, GREEN PILOT LIGHT, AUXILIARY CONTACTS FOR ELEVATOR RECALL, AND FIRE ALARM VOLTAGE MONITORING RELAY. EATON BUSSMAN #PS-4-T20-R1-K-G-B-F1 OR EQUAL. COORDINATE EXACT MOUNTING LOCATION AND REQUIREMENTS WITH ELEVATOR EQUIPMENT INSTALLER, AND PROVIDE FINAL ELECTRICAL CONNECTION TO ELEVATOR CONTROLLER. SEE DETAIL 1:E6.1.
5. PROVIDE POWER FOR ELEVATOR SHUNT TRIP CONTROL. SEE 1:E6.1 FOR MORE INFORMATION.

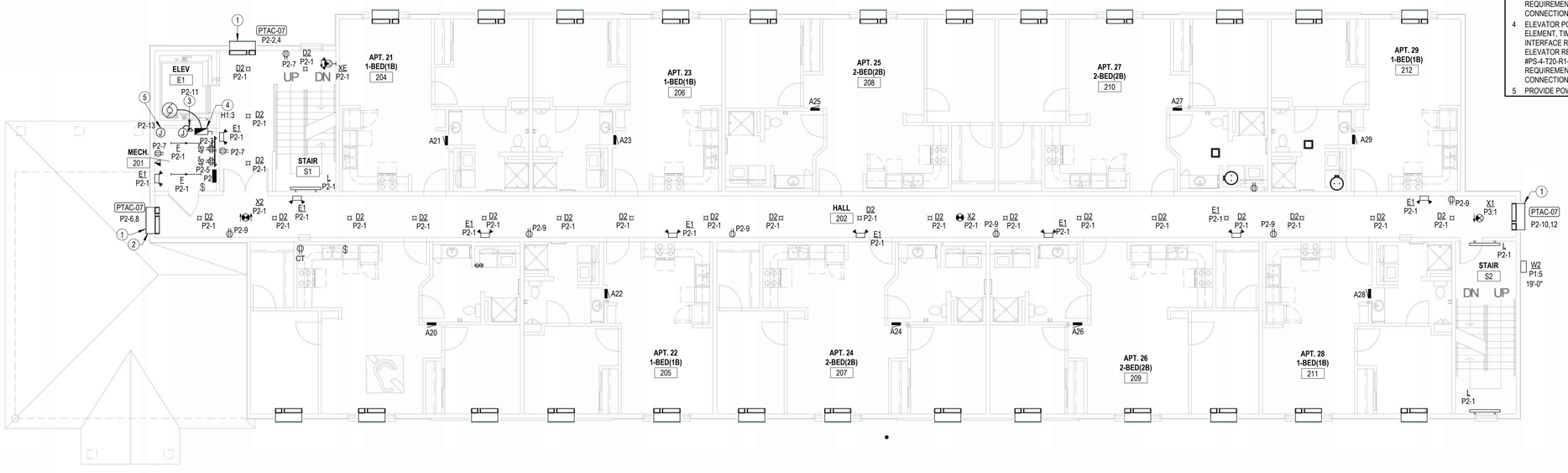

1 / E1.2 SECOND FLOOR ELECTRICAL PLAN
1/8" = 1'-0"

JonesGillamRenz
730 N. Ninth
Salina, KS 67401
785.827.0386
1881 Main Street, Suite 301
Kansas City, MO 64108
jgr@jgrarchitects.com

RESIDENCE AT GREEN MEADOW

NEW SENIOR LIVING FACILITY

SAN ANGELO, TEXAS

STATE OF TEXAS
TIMOTHY C. TREDWAY
95252
LICENSED PROFESSIONAL ENGINEER
11-15-2024

REVISIONS:

DATE: 11/15/2024
JOB: 24-3395
SHEET NO.:

E1.2

COPYRIGHTED ©

LST Consulting Engineers, PA
MANHATTAN
4809 Vue Du Lac Place, Suite 201
Manhattan, KS 66503
785.587.8042
WICHITA
125 S. Washington, Suite 150
Wichita, KS 67202
316.285.0696
www.LSTengineers.com
mail@LSTengineers.com

Project 24034 **11/15/2024**

GENERAL TELECOMMUNICATIONS NOTES

A. PROVIDE COMPLETE WIRED PHONE AND CATV OUTLETS IN APARTMENT UNITS AS INDICATED ON SHEET E4.1.

B. AT TELECOMMUNICATIONS OUTLETS IN COMMON AREAS, PROVIDE 4" SQUARE x 2-1/8" DEEP BOX WITH 1-GANG DEVICE RING AND (1) 1" CONDUIT STUBBED INTO MECHANICAL ROOM 107.

C. PROVIDE NYLON BUSHINGS FOR ALL CONDUIT ENDS NOT CONNECTED TO A BOX OR FITTING TO PROTECT CABLING FROM DAMAGE.

D. PROVIDE BLANK, STAINLESS STEEL COVER PLATES FOR ALL COMMON AREA TELECOM OUTLETS NOT ACTIVATED BY OWNER.

E. PROVIDE SUITABLE PULL STRING IN ALL CONDUITS.

F. ALL TELECOM DATA CABLING, JACKS, CONNECTORS, TERMINATIONS, EQUIPMENT AND TESTING SHALL BE PROVIDED BY OWNER.

NOTES BY SYMBOL

1. PROVIDE (2) CAT 5e UTP, NEC TYPE 'CMP' CABLES (SUPERIOR ESSEX #51-241-48 OR EQUAL) IN 3/4" CONDUIT FROM FACP TO MAIN TELECOM TERMINAL BOARD FOR CONNECTION TO FA SYSTEM DACT FOR REMOTE MONITORING.
2. SMOKE DETECTOR AND ADDRESSABLE RELAY FOR CONTROL OF ELECTROMAGNETIC DOOR HOLDERS. DOORS SHALL RELEASE UPON DETECTION OF SMOKE.
3. PROVIDE ADDRESSABLE FIRE ALARM RELAYS AND MONITORING MODULES FOR ALL FIRE SPRINKLER FLOW SWITCHES, TAMPER SWITCHES AND BELL/GONG. COORDINATE QUANTITIES AND LOCATIONS WITH FIRE SPRINKLER CONTRACTOR.
4. SMOKE DETECTOR AND HEAT DETECTOR IN ELEVATOR PIT FOR RECALL AND SHUT-DOWN. SEE DETAIL 1, SHEET E6.1.
5. ELEVATOR LOBBY SMOKE DETECTOR FOR ELEVATOR RECALL. SEE DETAIL 1, SHEET E6.1.
6. FIRE ALARM ADDRESSABLE CONTROL MODULE FOR CONTROL OF APARTMENT UNIT'S NOTIFICATION APPLIANCE CIRCUIT. MODULE SHALL BE PROGRAMMED TO ACTIVATE APARTMENT UNIT'S NOTIFICATION APPLIANCES UPON GENERAL BUILDING FIRE ALARM AND UPON ACTIVATION OF ANY SMOKE DETECTOR OR CO DETECTOR WITHIN APARTMENT UNIT. MOUNT FLUSH IN WALL AT 8'-0" AFF.
7. FIRE ALARM SYSTEM SMOKE DETECTOR.
8. PROVIDE 8' LONG SHEET OF 3/4" ACX FIRE RETARDANT PLYWOOD INSTALLED VERTICALLY WITH BOTTOM AT 6" AFF, WIDTH AS REQUIRED. PLYWOOD SHALL BE PERMANENTLY FASTENED TO THE WALL BY MEANS OF WALL ANCHORS UTILIZING GALVANIZED, ZINC PLATED, OR STAINLESS STEEL HARDWARE WITH A FLAT HEAD. FINISHED INSTALLATION SHALL HAVE FLUSH APPEARANCE WITH COUNTERSUNK SCREW HEADS TO PREVENT SPLITTING OF THE PLYWOOD. DRYWALL SCREWS ARE NOT ACCEPTABLE. PAINT WITH TWO COATS OF LIGHT GRAY FIRE RETARDANT SEALER PRIOR TO INSTALLATION OF ANY EQUIPMENT.
9. TELECOMMUNICATIONS GROUND BAR SHALL BE 13-1/4"W x 2"H x 1/4" THICK ELECTRO-TIN PLATED COPPER BUS BAR, COMPLETE WITH INSULATED STAND-OFFS AND STAINLESS STEEL BRACKETS, ERICO #TGBA14L06PT OR EQUAL. MOUNT AT 18" AFF. ALL CONNECTIONS TO GROUND BAR SHALL BE MADE USING COMPRESSION TYPE LUGS.
10. PROVIDE 1" CONDUIT WITH PULL STRING FROM TELECOM OUTLET TO MAIN TELEPHONE TERMINAL BOARD IN MECH 108.
11. PROVIDE PUSH BUTTON ROUGH-IN AND PREP DOOR JAM WITH RACEWAY AS INDICATED IN DETAL 3:M6.1 FOR AUTOMATIC DOOR OPENER. COORDINATE EXACT REQUIREMENTS WITH OWNER.

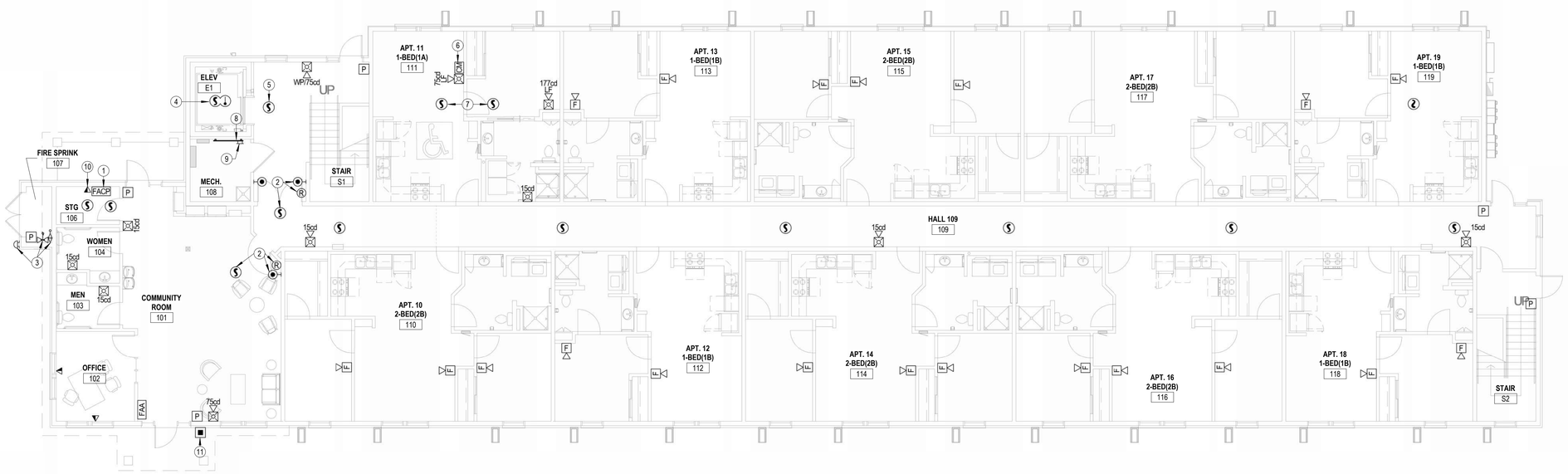

1 / E1.3 FIRST FLOOR SPECIAL SYSTEMS PLAN
1/8" = 1'-0"

JonesGillamRenz
730 N. Ninth
Salina, KS 67401
785.827.0386
1881 Main Street, Suite 301
Kansas City, MO 64108
jgr@jgrarchitects.com

RESIDENCE AT GREEN MEADOW
NEW SENIOR LIVING FACILITY
SAN ANGELO, TEXAS

STATE OF TEXAS
TIMOTHY C. TREDWAY
95252
LICENSED PROFESSIONAL ENGINEER
11-15-2024

REVISIONS:	
DATE:	11/15/2024
JOB:	24-3395
SHEET NO.:	

E1.3

COPYRIGHTED ©

LST Consulting Engineers, PA
MANHATTAN
4809 Vue Du Lac Place, Suite 201
Manhattan, KS 66503
785.587.8042
WICHITA
125 S. Washington, Suite 150
Wichita, KS 67202
316.285.0696
www.LSTengineers.com
mail@LSTengineers.com

Project 24034 **11/15/2024**

NOTES BY SYMBOL

1. SMOKE DETECTOR AND ADDRESSABLE RELAY FOR CONTROL OF ELECTROMAGNETIC DOOR HOLDERS. DOORS SHALL RELEASE UPON DETECTION OF SMOKE.
2. SMOKE DETECTOR AND HEAT DETECTOR AT TOP OF ELEVATOR HOISTWAY FOR RECALL AND SHUT-DOWN. SEE DETAIL 1, SHEET E6.1.
3. ELEVATOR LOBBY SMOKE DETECTOR FOR ELEVATOR RECALL. SEE DETAIL 1, SHEET E6.1.
4. FIRE ALARM ADDRESSABLE CONTROL MODULE FOR CONTROL OF APARTMENT UNIT"S NOTIFICATION APPLIANCE CIRCUIT. MODULE SHALL BE PROGRAMMED TO ACTIVATE APARTMENT UNIT'S NOTIFICATION APPLIANCES UPON GENERAL BUILDING FIRE ALARM AND UPON ACTIVATION OF ANY SMOKE DETECTOR OR CO DETECTOR WITHIN APARTMENT UNIT. MOUNT FLUSH IN WALL AT 8'-0" AFF.
5. FIRE ALARM SYSTEM SMOKE DETECTOR.
6. PROVIDE 8' LONG SHEET OF 3/4" ACX FIRE RETARDANT PLYWOOD INSTALLED VERTICALLY WITH BOTTOM AT 6" AFF, WIDTH AS REQUIRED. PLYWOOD SHALL BE PERMANENTLY FASTENED TO THE WALL BY MEANS OF WALL ANCHORS UTILIZING GALVANIZED, ZINC PLATED, OR STAINLESS STEEL HARDWARE WITH A FLAT HEAD. FINISHED INSTALLATION SHALL HAVE FLUSH APPEARANCE WITH COUNTERSUNK SCREW HEADS TO PREVENT SPLITTING OF THE PLYWOOD. DRYWALL SCREWS ARE NOT ACCEPTABLE. PAINT WITH TWO COATS OF LIGHT GRAY FIRE RETARDANT SEALER PRIOR TO INSTALLATION OF ANY EQUIPMENT.
7. TELECOMMUNICATIONS GROUND BAR SHALL BE 13-1/4"W x 2"H x 1/4" THICK ELECTRO-TIN PLATED COPPER BUS BAR, COMPLETE WITH INSULATED STAND-OFFS AND STAINLESS STEEL BRACKETS, ERICO #TGBA14L06PT OR EQUAL. MOUNT AT 18" AFF. ALL CONNECTIONS TO GROUND BAR SHALL BE MADE USING COMPRESSION TYPE LUGS.
8. ADDRESSABLE FIRE ALARM RELAYS FOR ELEVATOR RECALL, FIREMAN'S HAT, AND POWER SHUNT-TRIP, AND ADDRESSABLE MONITORING MODULE FOR MONITORING OF SHUNT TRIP VOLTAGE. SEE DETAIL #, SHEET E# #.
9. ELEVATOR MACHINE ROOM SMOKE AND HEAT DETECTORS FOR ELEVATOR RECALL AND SHUT-DOWN. SEE DETAIL 1, SHEET E6.1.

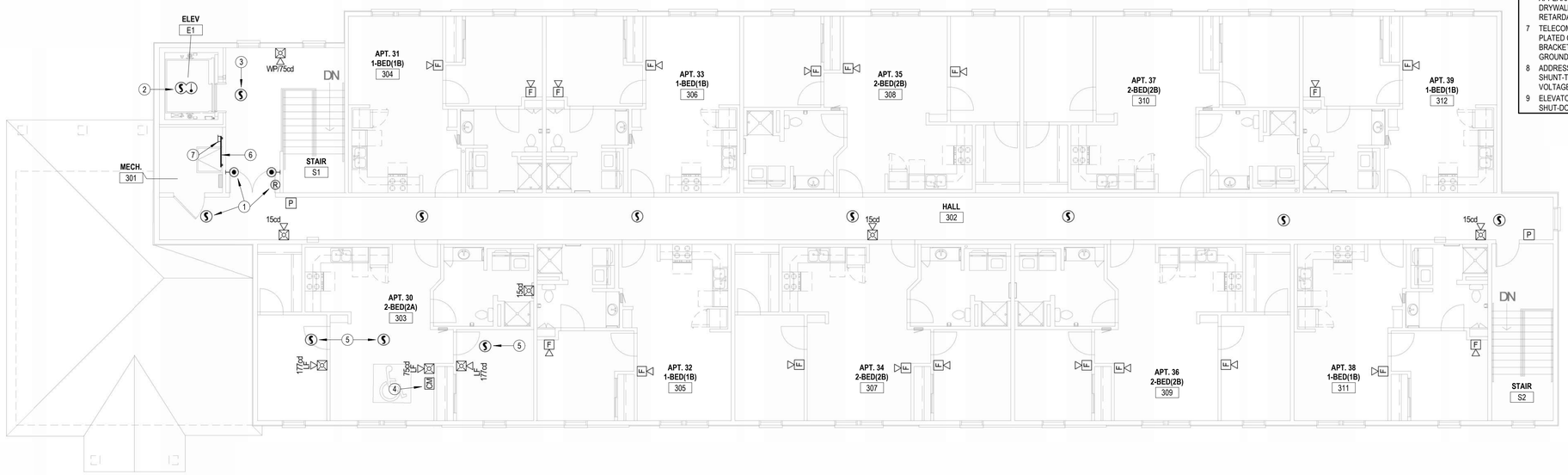

2 / E1.4 THRID FLOOR SPECIAL SYSTEMS PLAN
1/8" = 1'-0"

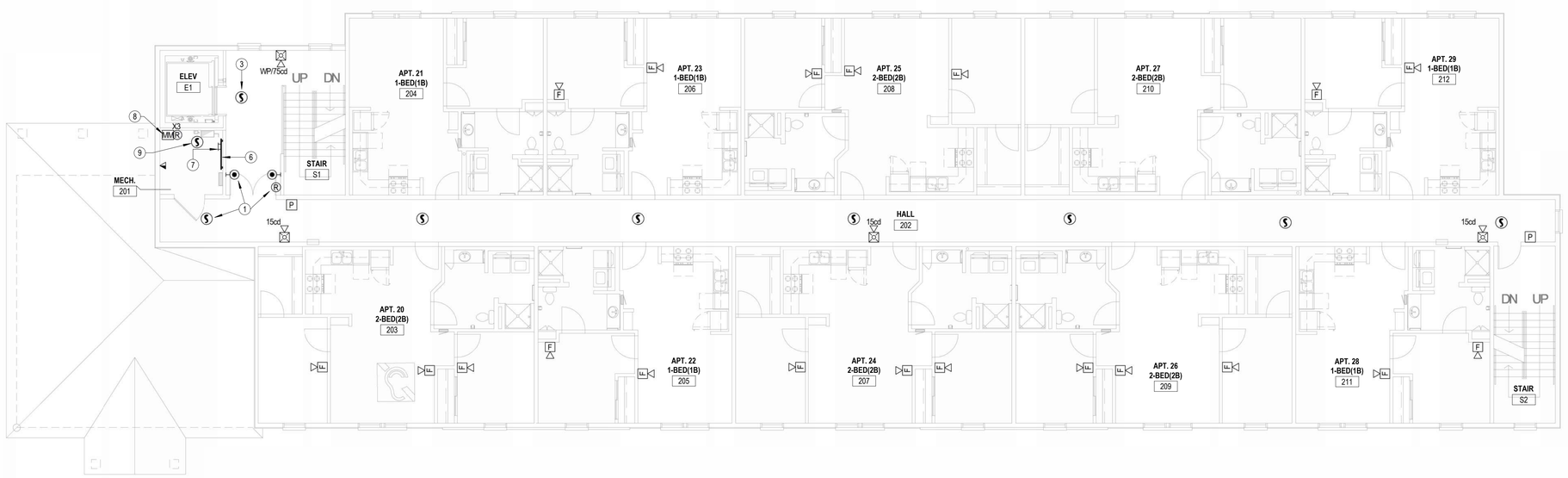

1 / E1.4 SECOND FLOOR SPECIAL SYSTEMS PLAN
1/8" = 1'-0"

JonesGillamRenz
730 N. Ninth
Salina, KS 67401
785.827.0386
1881 Main Street, Suite 301
Kansas City, MO 64108
jgr@jgrarchitects.com

RESIDENCE AT GREEN MEADOW

NEW SENIOR LIVING FACILITY

SAN ANGELO, TEXAS

STATE OF TEXAS
TIMOTHY C. TREDWAY
95252
LICENSED
PROFESSIONAL ENGINEER
11-15-2024

REVISIONS:

DATE: 11/15/2024
JOB: 24-3395
SHEET NO.:

E1.4

COPYRIGHTED ©

LST Consulting Engineers, PA
MANHATTAN
4809 Vue Du Lac Place, Suite 201
Manhattan, KS 66503
785.587.8042
WICHITA
125 S. Washington, Suite 150
Wichita, KS 67202
316.285.0696
www.LSTengineers.com
mail@LSTengineers.com

Project 24034 **11/15/2024**

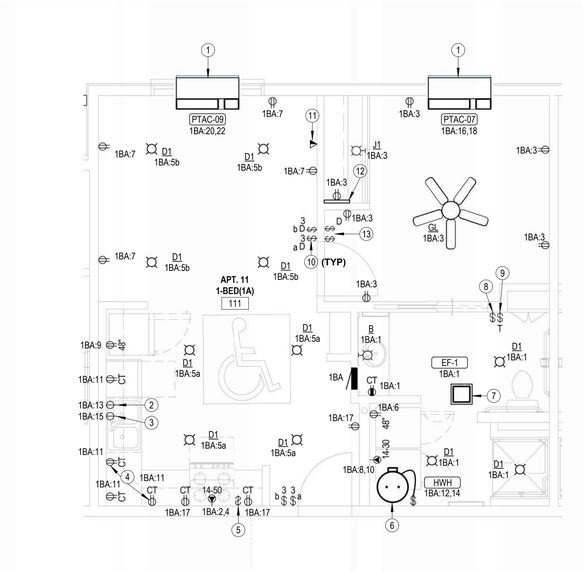

3 / E4.1 1 BEDROOM ACCESSIBLE ENLARGED POWER PLAN
1/4" = 1'-0"

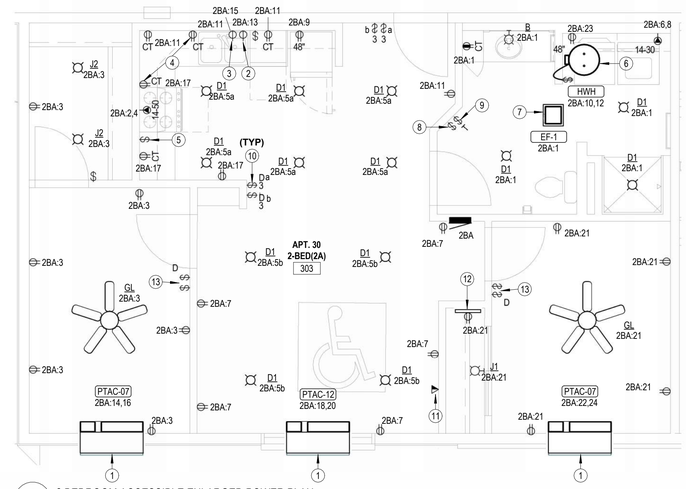

4 / E4.1 2 BEDROOM ACCESSIBLE ENLARGED POWER PLAN
1/4" = 1'-0"

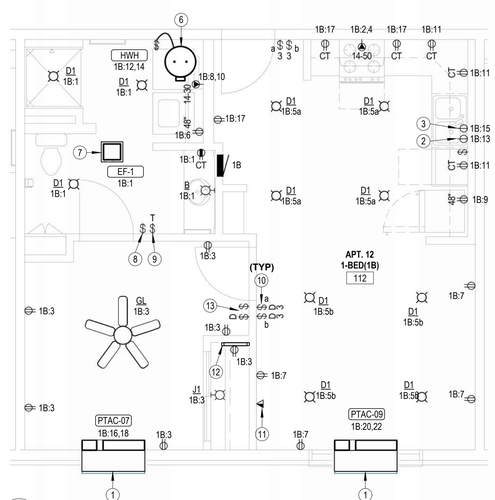

1 / E4.1 1 BEDROOM ENLARGED POWER PLAN
1/4" = 1'-0"

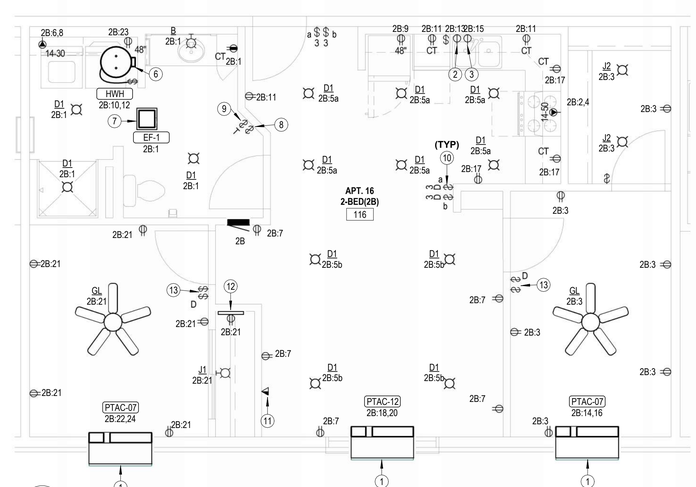

2 / E4.1 2 BEDROOM ENLARGED POWER PLAN
1/4" = 1'-0"

NOTES BY SYMBOL

1. PROVIDE NEMA6-20R RECEPTACLE FOR CORD AND PLUG CONNECTION OF PTAC. VERIFY RECEPTACLE CONFIGURATION WITH PTAC SUPPLIED BY MECHANICAL CONTRACTOR. INSTALL RECEPTACLE CONCEALED IN UNIT SUB-BASE.
2. PROVIDE RECEPTACLE BELOW COUNTER FOR CORD AND PLUG CONNECTION OF DISHWASHER. PROVIDE CORD AND GROUNDING PLUG AS REQUIRED.
3. SWITCHED RECEPTACLE BELOW COUNTER FOR GARBAGE DISPOSAL. COORDINATE EXACT LOCATION OF SWITCH WITH ARCHITECT.
4. IN ACCESSIBLE UNITS, INSTALL COUNTERTOP RECEPTACLES A MINIMUM 36" AWAY FROM CORNER PER FAIR HOUSING ACT DESIGN MANUAL CHAPTER 5 'SIDE REACH OVER AN OBSTRUCTION REQUIREMENTS. WHERE AN OBSTRUCTION PREVENTS 36" DISTANCE REQUIREMENT, INSTALL RECEPTACLE AS FAR FROM CORNER AS POSSIBLE.PROVIDE ADDITIONAL OUTLETS WITHIN 36" OF CORNER TO ENSURE COMPLIANCE WITH NEC PACING REQUIREMENTS.
5. PROVIDE SWITCH IN ACCESSIBLE UNITS FOR CONTROL OF RANGE HOOD
6. PROVIDE 30A/2P SNAP SWITCH AND CONNECT WATER HEATER. INSTALL SWITCH ADJACENT TO WATER HEATER.
7. CONNECT EXHAUST FAN/LIGHT PROVIDED BY MECHANICAL CONTRACTOR.
8. SWITCH CLOSEST TO DOOR SHALL CONTROL ALL LIGHTS IN BATHROOM, AND THE OTHER SWITCH SHALL CONTROL THE EXHAUST FAN.
9. PROVIDE TIMER SWITCH EQUAL TO AIR CYCLER 'SMART EXHAUST' FOR CONTROL OF EXHAUST FAN. SET SWITCH PER MANUFACTURER'S INSTRUCTIONS TO OPERATE FAN AS INDICATED BELOW:
   1 BEDROOM: 26 MINUTES PER HOUR
   2 BEDROOM: 38 MINUTES PER HOUR
10. PROVIDE PRESET SLIDE DIMMER COMPATIBLE WITH ASSOCIATED LIGHT FIXTURES.
11. COORDINATE FINAL LOCATIONS OF ALL CATV AND PHONE OUTLETS WITH OWNER.
12. TELECOM DISTRIBUTION DEVICE APPROXIMATELY 4'-0" AFF. COORDINATE EXACT REQUIREMENTS WITH UTILITY PROVIDER SELECTED BY OWNER.
13. SWITCH CEILING FAN AND LIGHT SEPARATELY.

JonesGillamRenz
730 N. Ninth
Salina, KS 67401
785.827.0386
1881 Main Street, Suite 301
Kansas City, MO 64108
jgr@jgrarchitects.com

RESIDENCE AT GREEN MEADOW

NEW SENIOR LIVING FACILITY

SAN ANGELO, TEXAS

STATE OF TEXAS
TIMOTHY C. TREDWAY
95252
LICENSED PROFESSIONAL ENGINEER
11-15-2024

REVISIONS:

DATE: 11/15/2024
JOB: 24-3395
SHEET NO.:

E4.1

COPYRIGHTED ©

LST Consulting Engineers, PA
MANHATTAN
4809 Vue Du Lac Place, Suite 201
Manhattan, KS 66503
785.587.8042
WICHITA
125 S. Washington, Suite 150
Wichita, KS 67202
316.285.0696
www.LSTengineers.com
mail@LSTengineers.com

Project 24034 **11/15/2024**

LIGHTING FIXTURE SCHEDULE

ID	Manufacturer	Model Number	CCT	Lumens	Watts	Mounting	Finish	Driver	Description	Notes
A	LITHONIA	FMFL-30840-CAML-WH	3000 K	2800 lm	35 W	SURFACE	WHITE	STANDARD	LED DECORATIVE SURFACE	--
B	SEAGULL	FML-WL-48-35	3000 K	[redacted]	29 W	SURFACE WALL	WHITE	STANDARD	3 LAMP VANITY LIGHT	--
C	LITHONIA	FMML-13-830-DDBT	3000 K	1900 lm	28 W	CEILING SURFACE	WHITE	STANDARD	13" ROUND LED SURFACE MOUNT	--
D1	HALO	SDMR-6-930-WH	3000 K	600 lm	10 W	CEILING SURFACE	WHITE	STANDARD	6" ROUND SURFACE MOUNTED DOWNLIGHT	6
D2	HALO	SDMR-12-930-WH	3000 K	1200 lm	16 W	CEILING SURFACE	WHITE	STANDARD	6" ROUND SURFACE MOUNTED DOWNLIGHT	--
E1	LITHONIA	ELM6L UVOLT LTP	[redacted]		3 W	SURFACE WALL	WHITE	--	LED DUAL-HEAD EMERGENCY LIGHT	1
E2	LITHONIA	AFB-OEL-DDBTXD-UVOLT-N-WT	[redacted]		3 W	SURFACE WALL	BRONZE	--	DIE-CAST ALUMINUM EMERGENCY LIGHT WITH POLYCARBONATE LENS, INTEGRAL BATTERY	1,2,3
F	LITHONIA	CSS-L48-4000LM-MVLOT-40K-80CRI	3000 K	4298 lm	34 W	SURFACE	WHITE	STANDARD	4' LENSED LED STRIP LIGHT	--
G	SEAGULL	15030EN-829	[redacted]		20 W	CEILING SUSPENDED	BRONZE	STANDARD	52" DIAMETER CEILING FAN WITHOUT LED LIGHT KIT	--
GL	SEAGULL	15030EN-829	3000 K	[redacted]	20 W	CEILING SUSPENDED	BRONZE	STANDARD	52" DIAMETER CEILING FAN WITH LED LIGHT KIT	--
H	LIGHTOLIER	P6RDL15940MCL-Z10U	4000 K	1500 lm	12 W	CEILING SURFACE	WHITE	STANDARD	6" ROUND SURFACE MOUNTED DOWNLIGHT	4
J1	HALO	SDMR-6-930-WH	3000 K	600 lm	10 W	SURFACE WALL	WHITE	STANDARD	6" ROUND SURFACE MOUNTED DOWNLIGHT	5
J2	HALO	SDMR-6-930-WH	3000 K	600 lm	10 W	CEILING SURFACE	WHITE	STANDARD	6" ROUND SURFACE MOUNTED DOWNLIGHT	5
L	LITHOINA	WL4-40L-EZ1-LP830-MSD7-DIM50-E10 WLCP	3000 K	3927 lm	40 W	SURFACE WALL	WHITE	STANDARD	4 FT. WALL MOUNTED STAIRWELL LIGHT WITH EMERGENCY BATTERY BACKUP	9
R1	LITHONIA	DSX0-LED-P3-40K-T2M-MVOLT-HS	4000 K	8565 lm	69 W	ROUND POLE	BLACK	LED DRIVER	LED AREA LIGHT, SINGLE HEAD FULL CUT-OFF WITH IES TYPE II DISTRIBUTION AND HOUSE SIDE SHEILD	3,7,8
R2	LITHONIA	DSX0-LED-P3-40K-RCCO-MVOLT	4000 K	6194 lm	69 W	ROUND POLE	BLACK	LED DRIVER	LED AREA LIGHT, SINGLE HEAD FULL CUT-OFF WITH RIGHT SIDE CUT OFF DISTRIBUTION.	3,7,8
R3	LITHONIA	DSX0-LED-P3-40K-LCCO-MVOLT	4000 K	6194 lm	69 W	ROUND POLE	BLACK	LED DRIVER	LED AREA LIGHT, SINGLE HEAD FULL CUT-OFF WITH LEFT SIDE CUT OFF DISTRIBUTION.	3,7,8
R4	LITHONIA	DSX0-LED-P1-40K-T2M-MVOLT-HS	4000 K	4735 lm	33 W	ROUND POLE	BLACK	LED DRIVER	LED AREA LIGHT, SINGLE HEAD FULL CUT-OFF WITH IES TYPE II DISTRIBUTION AND HOUSE SIDE SHEILD	3,8,11
S	ACCLAIM	DFB-111-AKEU	4000 K	2455 lm	50 W	GRADE	BLACK	STANDARD	IP-66 RATED, GRADE MOUNTED LED FLOOR LIGHT	
T	LITHOINA	FEM-L48-4000LM-IMAFL-WD-MVOLT-G Z10-35K-80CRI	3000 K	3615 lm	24 W	SURFACE WALL	WHITE	STANDARD	4 FT. FULLY ENCLOSED AND GASKETED INDUSTRIAL FIXTURE WITH FROSTED, RIBBED, IMPACT-RESISTANT ACRYLIC LENS	--
W1	LITHOINA	MRE-LED-P1-40K-SR3-MVOLT	4000 K	4667 lm	20 W	SURFACE WALL	BLACK	STANDARD	EXTERIOR LED WALL PACK WITH IES TYPE III DISTRIBUTION	3
W2	LITHONIA	MRE-LED-P3-40K-SR4-MVOLT	4000 K	4667 lm	40 W	SURFACE WALL	BLACK	STANDARD	EXTERIOR LED WALL PACK WITH IES TYPE IV DISTRIBUTION	3
X1	LITHONIA	EDGR 1 R EL	[redacted]		5 W	CEILING	WHITE	--	SINGLE FACE LED EXIT SIGN	1,2
X2	LITHONIA	EDGR 2 R EL			5 W	CEILING	WHITE	--	DOUBLE FACED LED EXIT SIGN	1,2
X3	LITHONIA	EDG 1 R EL WM			5 W	WALL	WHITE	--	SINGLE FACE LED EXIT SIGN	1,2
XE	LITHONIA	LHQM LED R HO			4 W	WALL	WHITE	--	COMBO EXIT/EMERGENCY LIGHTING UNIT	1,2

GENERAL:
- ALL LED FIXTURES SHALL ADHERE TO LM79 AND LM80 STANDARDS
- PROVIDE MANUFACTURER'S FLANGE KIT WHERE LAY-IN FIXTURES ARE TO BE INSTALLED IN GYP.
- ALL APARTMENT LIGHT FIXTURES SHALL BE ENERGY STAR CERTIFIED

NOTES:
1. PROVIDE FIXTURE WITH EMERGENCY BATTERY INTEGRAL CHARGER WITH SELF-DIAGNOSTIC/SELF-TESTING ELECTRONICS.
2. FIXTURE SHALL BE CAPABLE OF WALL OR CEILING MOUNT APPLICATIONS AND SHALL HAVE BREAK-OUT DIRECTIONAL CHEVRONS.
3. U.L. LISTED FOR 'WET LOCATION'.
4. U.L LISTED FOR 'DAMP LOCATION'.
5. FIXTURE TO COMPLY WITH NEC 410.16(C)(5).
6. WHERE INSTALLED IN BATHROOMS TO BE 'DAMP LOCATION' U.L. LISTED, WHERE ABOVE SHOWERS TO BE 'WET LOCATION' U.L. LISTED.
7. PROVIDE FIXTURE/POLE ASSEMBLY WITH 20' ROUND STRAIGHT STEEL POLE, BLACK TO MATCH FIXTURE. FIXTURE HEIGHT SHALL NOT EXCEED 7'-0".
8. FIXTURE/POLE ASSEMBLY SHALL BE RATED FOR 100 MPH WIND LOADS. PROVIDE WITH VIBRATION DAMPER PER MANUFACTURER'S RECOMMENDATIONS.
9. PROVIDE FIXTURE WITH INTEGRAL OCCUPANCY SENSOR AND CONTROLS TO DIM FIXTURE TO 50% LIGHT OUTPUT WITH UNOCCUPIED.
10. WHERE INSTALLED IN FIRE RATED ASSEMBLY, PROVIDE FIRE RATED RECSSED LIGHT COVER EQUAL TO TENMAT FF109. VERIFY RATING REQUIREMENTS WITH ARCHITECT.
11. PROVIDE FIXTURE/POLE ASSEMBLY WITH 10' ROUND STRAIGHT STEEL POLE, BLACK TO MATCH FIXTURE. FIXTURE HEIGHT SHALL NOT EXCEED 7'-0".

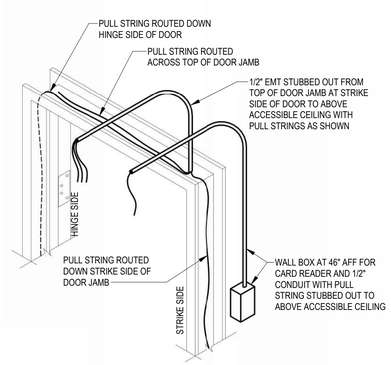

3 / E6.1 DOOR ACCESS CONTROL ROUGH-IN DIAGRAM
NO SCALE

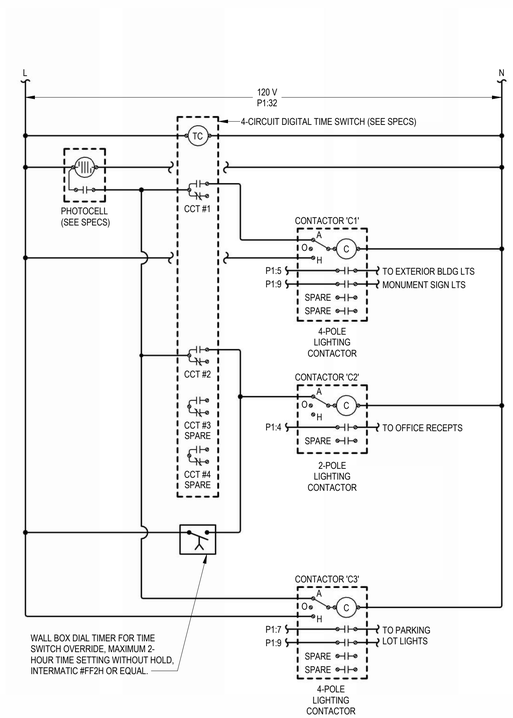

2 / E6.1 LIGHTING CONTROL DIAGRAM
NO SCALE

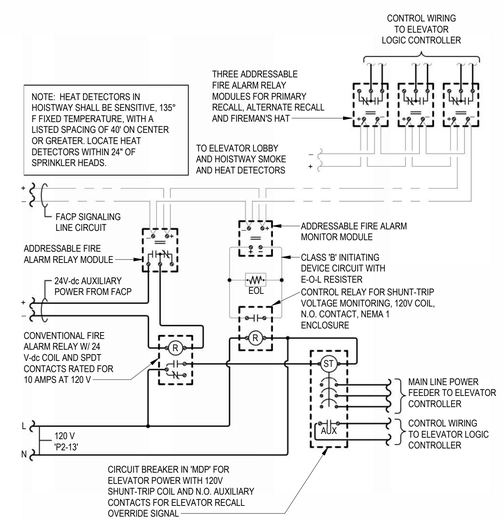

NOTE: HEAT DETECTORS IN HOISTWAY SHALL BE SENSITIVE, 135° F FIXED TEMPERATURE, WITH A LISTED SPACING OF 40' ON CENTER OR GREATER. LOCATE HEAT DETECTORS WITHIN 24" OF SPRINKLER HEADS.

ELEVATOR RECALL AND SHUT-DOWN SEQUENCE OF OPERATION:

1. UPON SENSING SMOKE FROM ONE OR MORE ELEVATOR LOBBY OR HOISTWAY, THE SMOKE DETECTOR SHALL SIGNAL THE FIRE ALARM CONTROL PANEL, WHICH WILL FORWARD THE SIGNAL TO THE ELEVATOR LOGIC CONTROLLER VIA ADDRESSABLE RELAY MODULES TO RECALL ELEVATOR CAB TO THE PRIMARY RECALL FLOOR. IF PRIMARY RECALL FLOORS LOBBY SMOKE DETECTOR SENSES SMOKE AT THAT FLOOR, THE ELEVATOR CONTROLLER WILL SEND THE ELEVATOR CAB TO THE NEXT FLOOR CLEAR OF SMOKE. ONCE THE ELEVATOR CAB HAS REACHED THE DESIGNATED FLOOR, THE ELEVATOR CAB DOORS WILL OPEN AND THE CONTROLLER WILL LOCK THE ELEVATOR CAB AT THAT FLOOR, DISABLING THE ELEVATOR CAB CONTROLS, UNLESS A FIREMAN'S KEY IS USED TO OVERRIDE AUTOMATIC CONTROLS.
2. ALL SMOKE DETECTORS ASSOCIATED WITH ELEVATOR RECALL (LOBBY AND HOISTWAY) SHALL TRANSMIT A SEPARATE AND DISTINCT VISIBLE ANNUNCIATION AT THE FIRE ALARM CONTROL PANEL.
3. UPON SENSING A HEAT ALARM CONDITION IN THE ELEVATOR HOISTWAY, THE HEAT DETECTOR SHALL SIGNAL THE FIRE ALARM CONTROL PANEL, WHICH WILL FORWARD THE SIGNAL TO THE ADDRESSABLE RELAY MODULE TO ACTIVATE (VIA A CONVENTIONAL FIRE ALARM RELAY) THE SHUNT-TRIP BREAKER POWERING THE ELEVATOR SO AS TO DISCONNECT POWER TO THAT CIRCUIT. THIS IS TO BE A NON-AUTO RESET SWITCH. WHEN THE SPRINKLER HEAD HAS REACHED ITS CRITICAL TEMPERATURE OF 165° F., THE HEAD WILL BEGIN DISCHARGE OF WATER.

1 / E6.1 ELEVATOR RECALL AND SHUT-DOWN WIRING DIAGRAM
NO SCALE

JonesGillamRenz
730 N. Ninth
Salina, KS 67401
785.827.0386
1881 Main Street, Suite 301
Kansas City, MO 64108
jgr@jgrarchitects.com

RESIDENCE AT GREEN MEADOW
NEW SENIOR LIVING FACILITY
SAN ANGELO, TEXAS

STATE OF TEXAS
TIMOTHY C. TREDWAY
95252
LICENSED PROFESSIONAL ENGINEER
11-15-2024

REVISIONS:

DATE: 11/15/2024
JOB: 24-3395
SHEET NO.:

E6.1

COPYRIGHTED ©

LST Consulting Engineers, PA
MANHATTAN
4809 Vue Du Lac Place, Suite 201
Manhattan, KS 66503
785.587.8042
WICHITA
125 S. Washington, Suite 150
Wichita, KS 67202
316.285.0696
www.LSTengineers.com
mail@LSTengineers.com

Project 24034 **11/15/2024**

Panelboard: H1

Location: Mech 108
Supply: Meter Center
Mounting: Surface
Enclosure: NEMA 1
Features & Modifications: -

Voltage: 208 V, 3 Ø, 4 W
Bus Rating: 600 A
Neutral: 100%
Mains Type: MLO
Mains Rating: 600 A
Mains FN/Note: -
SCCR: 22 kA

Ckt	Description	Frame (A)	Trip (A)	Poles	FN/Note	Load
H1:1	P1	200	200	3		32784
H1:2	P2	100	100	3		20380
H1:3	Elevator (40 HP)	300	300	3		81000
H1:4	Space	--	--	1		--
H1:5	Space	--	--	1		--
H1:6	Space	--	--	1		--

Load Summary

Load Classification	Connected	Factor	Demand	Panel Totals	
Motor	8912 VA	112.41%	10018 VA	**Connected Load:**	134 kVA
Other	1900 VA	100.00%	1900 VA	**Connected Current:**	372 A
Lighting - Interior	3373 VA	125.00%	4216 VA	**Demand Load:**	142 kVA
Receptacle - General	11880 VA	92.09%	10940 VA	**Demand Current:**	394 A
Electric Water Heating	4500 VA	125.00%	5625 VA		
Electric Heat	22600 VA	125.00%	28250 VA		
Elevator	81000 VA	100.00%	81000 VA		

Notes:
PROVIDE WITH INTEGRAL SURGE PROTECTION DEVICE PER SPECIFICATIONS

NOTES:
- Meter Center main circuit breaker shall be 42 kAIC fully rated. Feeder breakers may be series rated with main breaker for a 42 kAIC rating.
- All conductor sizes are based on copper, U.N.O.
- Entire installation shall comply with NEC.
- Coordinate all responsibilities and requirements with power utility company and pay associated fees. Contact Information:
  AEP Texas
  Jacob D Carson
  Technician Sr.
  (325) 657-2821
  jdcarson@aep.com
- Coordinate final location of meter assemblies with utility company. Provide shop drawings of proposed equipment whether as specified or substituted to utility company for approval.
- All meter center components shall be NEMA 3R.
- All dimensions based on Square D equipment. It is the contractor's responsibility to verify the dimensions of substitute equipment.
- For each meter, provide a permanent brass, copper or aluminum tag identifying the apartment served. Tags shall be securely fastened to the meter base and be stamped with 1/8" letters, minimum.

METER CENTER DEMAND CALCULATION

DWELLING UNIT QTY: 30

AREA: 21750 SF

FEEDER AND SERVICE LOADS PER NEC 220.84 PART IV

						Connected Load (VA)	Demand Load (VA)
(C)	***Calculated Loads***						
(C1)	General Lighting and Receptacles (220.84 (C)(1))						
	a) Lighting and Receptacles	3 VA per Square Foot				65250 VA	
(C2)	Required Circuits (220.84 (C)(2))						
	a) Laundry Circuit	1500 VA per Circuit	30	Circuits		45000 VA	
	b) Kitchen Circuits	1500 VA per Circuit	60	Circuits		90000 VA	
(C3)	Nameplate Ratings of Equipment (220.84 (C)(3))						
	a1) Dishwasher	840 VA each	Qty.	30		25200 VA	
	a2) Refrigerator	1200 VA each	Qty.	30		36000 VA	
	a3) Microwave	1000 VA each	Qty.	30		30000 VA	
	a4) Disposal	1175 VA each	Qty.	30		35250 VA	
	b) Electric Range	8000 VA each	Qty.	30		240000 VA	
	c) Clothes Dryer	5000 VA each	Qty.	30		150000 VA	
	d) Water Heater	4500 VA each	Qty.	30		135000 VA	
(C4)	Nameplate Ratings of Motors (220.84 (C)(4))						
	a) HVAC Blower Fan	30 VA each	Qty.	75		2250 VA	
	b) Exhaust Fans	0 VA each	Qty.	0		0 VA	
(C5)	Larger of A/C or Electric Heat (220.84 (C)(5))						
	a) A/C or Heat #1	1960 VA each	Qty.	75		147000 VA	
	b) A/C or Heat #2	0 VA each	Qty.	0		0 VA	
			Connected Load Total			1000950 VA	

Dwelling Unit Demand Factor from Table 220.84 = 0.33

Total Apartment Demand (VA)	330314 VA
Total House Load Demand (VA)	0 VA
Total Building Demand (VA)	330314 VA
Total Meter Center Demand Load (Amperes) @ 208 V /120V- 3 Ph, 4 W	916.9 A

Provide 1000A Meter Center

APARTMENT FEEDER SCHEDULE

APARTMENT PANEL NUMBER	COPPER	ALUMINUM OR SER
A15, A16, A17, A18, A19, A26, A27, A28, A29	(3)#1, #8G, 1-1/4"C.	(3)#1/0, #4G, 1-1/2"C.
A14, A24, A25, A33, A36, A37, A38, A39	(3)#1, #8G, 1-1/4"C.	(3)#2/0, #3G, 2"C.
A11, A12, A13, A23, A34, A35	(3)#1/0, #6G, 1-1/2"C.	(3)#3/0, #2G, 2"C.
A21, A22, A31, A32	(3)#2/0, #4G, 2"C.	(3)#4/0, #1G, 2"C.
A10, A20, A30	(3)#3/0, #4G, 2"C.	(3)#250 KCMIL, #1/0G, 2-1/2"C.

NOTES:
1. VOLTAGE DROP HAS BEEN ACCOUNTED FOR IN SIZES INDICATED, FURTHER UPSIZING OF FEEDERS IS NOT NECESSARY
2. ENSURE PANEL LUGS ARE ADEQUATELY SIZED TO HANLDE UP-SIZED FEEDERS. PROVIDE LUG ADAPTER KITS IF REQUIRED

DWELLING UNIT FEEDER CALCULATION

UNIT TYPE: 2 Bed / 2 Bath (Units 2A/1B)

AREA: 850 SF

FEEDER AND SERVICE LOADS PER NEC 220.82 PART IV

						Connected Load (VA)	Demand Load (VA)
(B)	***General Loads***						
(B1)	General Lighting and Receptacles (220.82 (B)(1))						
	a) Lighting and Receptacles	3 VA per Square Foot				2550 VA	
(B2)	Small Appliance & Laundry Branch Circuits (220.82 (B)(2))						
	a) Laundry Circuit	1500 VA per Circuit	1	Circuit		1500 VA	
	b) Kitchen Circuits	1500 VA per Circuit	2	Circuits		3000 VA	
(B3)	Nameplate Ratings of Equipment (220.82 (B)(3))						
	a1) Dishwasher	840 VA each	Qty.	1		840 VA	
	a2) Refrigerator	1000 VA each	Qty.	1		1000 VA	
	a3) Microwave	1000 VA each	Qty.	1		1000 VA	
	a4) Disposal	1175 VA each	Qty.	1		1175 VA	
	b) Electric Range	8000 VA each	Qty.	1		8000 VA	
	c) Clothes Dryer	5000 VA each	Qty.	1		5000 VA	
	d) Water Heater	4500 VA each	Qty.	1		4500 VA	
(B4)	Nameplate Ratings of Motors (220.82 (B)(4))						
	a) HVAC Blower Fan	30 VA each	Qty.	3		90 VA	
	b) Exhaust Fans	0 VA each	Qty.	0		0 VA	
			Part (B) Connect Load Total			28655 VA	
	Part (B) Demand Load Total (100% of 1st 10 KVA + 40% of remainder)						17462 VA
(C)	***Heating and Air Conditioning Load***						
(C1)	100% Namplate Rating of Air Conditioner (220.82 (C)(1))						
	a) A/C Unit #1	0 VA each	Qty.	0		0 VA	
	b) A/C Unit #2	0 VA each	Qty.	0		0 VA	
			Part (C1) Connect Load Total			0 VA	
(C2)	100% Namplate Rating of Heat Pump w/o Supplemental Heat (220.82 (C)(2))						
	a) Heat Pump Unit #1	0 VA each	Qty.	0		0 VA	
	b) Heat Pump Unit #2	0 VA each	Qty.	0		0 VA	
			Part (C2) Connect Load Total			0 VA	
(C3)	100% of Heat Pump & 65% Supplemental Electric Heat (220.82 (C)(3))						
	a1) Heat Pump Unit #1	0 VA each	Qty.	0		0 VA	
	a2) Electric Heat #1	0 VA each	Qty.	0		0 VA	
	b1) Heat Pump Unit #2	0 VA each	Qty.	0		0 VA	
	b2) Electric Heat #2	0 VA each	Qty.	0		0 VA	
			Part (C3) Connect Load Total			0 VA	
(C4)	65% of Total Electric Heat if < 4 Separately Controlled Units (220.82 (C)(4))						
	a) Electric Heat #1	1960 VA each	Qty.	3		3822 VA	
	b) Electric Heat #2	0 VA each	Qty.	0		0 VA	
			Part (C4) Connect Load Total			3822 VA	
(C5)	40% of Total Electric Heat if > 4 Separately Controlled Units (220.82 (C)(5))						
	a) Electric Heat #1	0 VA each	Qty.	0		0 VA	
	b) Electric Heat #2	0 VA each	Qty.	0		0 VA	
			Part (C5) Connect Load Total			0 VA	
			Part (C) Connect Load Total			3822 VA	
	Part (C) Demand Load (Largest of C1 - C5)						3822 VA

Total Dwelling Unit Demand (VA)		21284 VA
Total Amps @ 208 V /120V-1Ph-3W		102.3 A

Provide 125A Load Center & Feed with 110A/2P Breaker

DWELLING UNIT FEEDER CALCULATION

UNIT TYPE: 1 Bed / 1 Bath (Units 2A/1B)

AREA: 600 SF

FEEDER AND SERVICE LOADS PER NEC 220.82 PART IV

						Connected Load (VA)	Demand Load (VA)
(B)	***General Loads***						
(B1)	General Lighting and Receptacles (220.82 (B)(1))						
	a) Lighting and Receptacles	3 VA per Square Foot				1800 VA	
(B2)	Small Appliance & Laundry Branch Circuits (220.82 (B)(2))						
	a) Laundry Circuit	1500 VA per Circuit	1	Circuit		1500 VA	
	b) Kitchen Circuits	1500 VA per Circuit	2	Circuits		3000 VA	
(B3)	Nameplate Ratings of Equipment (220.82 (B)(3))						
	a1) Dishwasher	840 VA each	Qty.	1		840 VA	
	a2) Refrigerator	1000 VA each	Qty.	1		1000 VA	
	a3) Microwave	1000 VA each	Qty.	1		1000 VA	
	a4) Disposal	1175 VA each	Qty.	1		1175 VA	
	b) Electric Range	8000 VA each	Qty.	1		8000 VA	
	c) Clothes Dryer	5000 VA each	Qty.	1		5000 VA	
	d) Water Heater	4500 VA each	Qty.	1		4500 VA	
(B4)	Nameplate Ratings of Motors (220.82 (B)(4))						
	a) HVAC Blower Fan	30 VA each	Qty.	2		60 VA	
	b) Exhaust Fans	0 VA each	Qty.	0		0 VA	
			Part (B) Connect Load Total			27875 VA	
	Part (B) Demand Load Total (100% of 1st 10 KVA + 40% of remainder)						17150 VA
(C)	***Heating and Air Conditioning Load***						
(C1)	100% Namplate Rating of Air Conditioner (220.82 (C)(1))						
	a) A/C Unit #1	0 VA each	Qty.	0		0 VA	
	b) A/C Unit #2	0 VA each	Qty.	0		0 VA	
			Part (C1) Connect Load Total			0 VA	
(C2)	100% Namplate Rating of Heat Pump w/o Supplemental Heat (220.82 (C)(2))						
	a) Heat Pump Unit #1	0 VA each	Qty.	0		0 VA	
	b) Heat Pump Unit #2	0 VA each	Qty.	0		0 VA	
			Part (C2) Connect Load Total			0 VA	
(C3)	100% of Heat Pump & 65% Supplemental Electric Heat (220.82 (C)(3))						
	a1) Heat Pump Unit #1	0 VA each	Qty.	0		0 VA	
	a2) Electric Heat #1	0 VA each	Qty.	0		0 VA	
	b1) Heat Pump Unit #2	0 VA each	Qty.	0		0 VA	
	b2) Electric Heat #2	0 VA each	Qty.	0		0 VA	
			Part (C3) Connect Load Total			0 VA	
(C4)	65% of Total Electric Heat if < 4 Separately Controlled Units (220.82 (C)(4))						
	a) Electric Heat #1	1960 VA each	Qty.	2		2548 VA	
	b) Electric Heat #2	0 VA each	Qty.	0		0 VA	
			Part (C4) Connect Load Total			2548 VA	
(C5)	40% of Total Electric Heat if > 4 Separately Controlled Units (220.82 (C)(5))						
	a) Electric Heat #1	0 VA each	Qty.	0		0 VA	
	b) Electric Heat #2	0 VA each	Qty.	0		0 VA	
			Part (C5) Connect Load Total			0 VA	
			Part (C) Connect Load Total			2548 VA	
	Part (C) Demand Load (Largest of C1 - C5)						2548 VA

Total Dwelling Unit Demand (VA)		19698 VA
Total Amps @ 208 V /120V-1Ph-3W		94.7 A

Provide 100A Load Center & Feed with 100A/2P Breaker

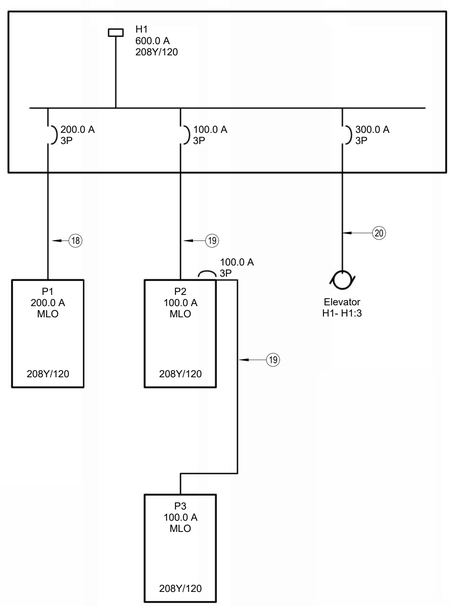

2 / E6.2 ELECTRICAL ONE LINE DIAGRAM - HOUSE
1" = 1'-0"

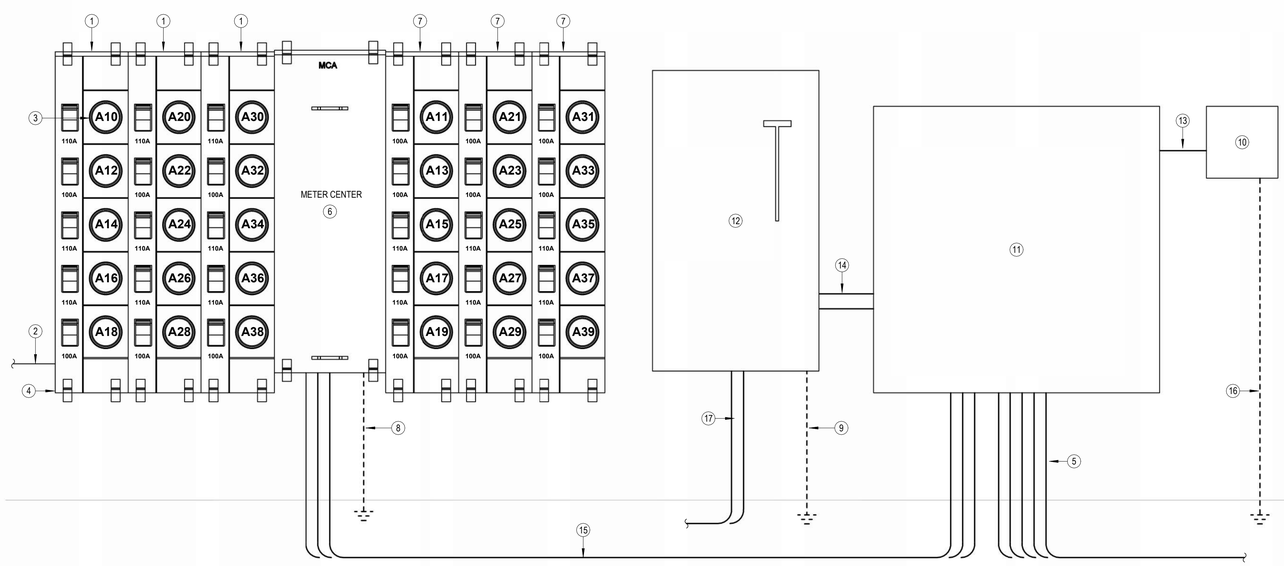

1 / E6.2 ELECTRICAL RISER DIAGRAM
NO SCALE

NOTES BY SYMBOL

1. 5-SOCKET BRANCH UNITS, 3-PH IN; 1-PH OUT, WITH (2) 100A AND (3) 110A BRANCH BREAKERS AS INDICATED. 800A HORIZONTAL CROSS BUS METER SOCKETS SHALL BE RINGLESS TYPE, 5-JAW WITH HORN BYPASS SQUARE D 'EZ METER-PAK' #EZMH315125. PROVIDE PERMANENT LABEL ON EACH METER SOCKET BREAKER INDICATING THE APARTMENT BEING SERVED.
2. SEE FEEDER SCHEDULE, THIS SHEET FOR SIZED TO APARTMENT UNIT LOAD CENTERS.
3. MAXIMUM HEIGHT TO CENTERLINE OF TOP METER SOCKET SHALL BE 5'-6" AFG.
4. MINIMUM HEIGHT TO BOTTOM OF METER SOCKET ASSEMBLY SHALL BE 18" AFG.
5. (5) 4" CONDUITS WITH PULL ROPES UNDERGROUND FOR SERVICE FROM PAD MOUNTED UTILITY TRANSFORMER. CABLING BY POWER CO. RE: 4:ME1.0.
6. METER CENTER MAIN, 3-PH IN; 3-PH OUT, 208/120V-3PH, 4 WIRE WITH 1000A/3P MAIN BREAKER, 42 KAIC RATED, SERVICE ENTRANCE RATED WITH INTEGRAL SURGE PROTECTION DEVICE. SQUARE D 'EZ METER-PAK' #EZM31000CB. PROVIDE SIGNAGE AT CIRCUIT BREAKER TO READ 'SERVICE DISCONNECT 1 OF 2'
7. 5-SOCKET BRANCH UNITS, 3-PH IN; 1-PH OUT, WITH (3) 100A AND (2) 110A BRANCH BREAKERS AS INDICATED. 800A HORIZONTAL CROSS BUS METER SOCKETS SHALL BE RINGLESS TYPE, 5-JAW WITH HORN BYPASS SQUARE D 'EZ METER-PAK' #EZMH315125. PROVIDE PERMANENT LABEL ON EACH METER SOCKET BREAKER INDICATING THE APARTMENT BEING SERVED.
8. #3/0 CU GROUNDING ELECTRODE CONDUCTOR TO CONCRETE ENCASED ELECTRODE, UNDERGROUND METAL WATER PIPE, AND DRIVEN GROUND ROD. BOND ALL ITEMS IN ACCORDANCE WITH NEC ARTICLE 250.
9. #2/0 CU GROUNDING ELECTRODE CONDUCTOR TO CONCRETE ENCASED ELECTRODE, UNDERGROUND METAL WATER PIPE, AND DRIVEN GROUND ROD. BOND ALL ITEMS IN ACCORDANCE WITH NEC ARTICLE 250.
10. CT RATED METER SOCKET PER AEP TEXAS REQUIREMENTS
11. 48"x48"x12"D NEMA 3R ENCLOSURE WITH HINGED DOORS, GROUND LUG, AND POVISIONS FOR POWER COMPANY PADLOCK AND SEAL
12. 600A/3P SERVICE ENTRANCE RATED DISCONECT SWITCH WITH SOLID NEUTRAL AND (3) 500A DUAL-ELEMENT, TIME-DELAY, CLASS 'RK1' FUSES IN NEMA 3R ENCLOSURE. PROVIDE SIGNAGE AT DISCONNECT SWITCH TO READ 'SERVICE DISCONNECT 2 OF 2'
13. 2" CONDUIT FOR POWER COMPANY PROVIDED METER WIRING
14. (2) PARALLEL 3" CONDUITS, EACH WITH (4) #350 KCMIL COPPER OR (3) PARALLEL 3" CONDUITS, EACH WITH (4)#300KCMIL ALUMINUM
15. (3) PARALLEL 3" CONDUITS, EACH WITH (4) #400 KCMIL
16. #6 BARE CU GROUND TO 5/8" DIA. x 8' LONG COPPER-CLAD STEEL GROUND ROD
17. (2) PARALLEL 3" CONDUITS, EACH WITH (4) #350 KCMIL, #2/0G COPPER, OR (3) PARALLEL 3" CONDUITS, EACH WITH (4)#300KCMIL, #3/0 GROUND ALUMINUM TO PANEL 'H1'.
18. (4)#3/0, #6G., 2"C.
19. (4)#1, #8G., 1-1/2"C.
20. (4)#350, #4G., 2-1/2"C.

JonesGillamRenz
730 N. Ninth
Salina, KS 67401
785.827.0386
1881 Main Street, Suite 301
Kansas City, MO 64108
jgr@jgrarchitects.com

RESIDENCE AT GREEN MEADOW
NEW SENIOR LIVING FACILITY
SAN ANGELO, TEXAS

STATE OF TEXAS
TIMOTHY C. TREDWAY
95252
LICENSED
PROFESSIONAL ENGINEER
11-15-2024

REVISIONS:

DATE: 11/15/2024
JOB: 24-3395
SHEET NO.:

E6.2

COPYRIGHTED ©

Designation: 2B

Installed Location: 2 Bedroom
Voltage: 120/208-1Ph-3W
Mounting: Flush
Enclosure: NEMA 1

Bus Amps: 125
MCB Amps: MLO
Features & Modifications: PROVIDE SURGE PROTECTION DEVICE

SCCR/AIC: 22.0 kA
Mains FN/Note: -

Ckt	Description	Circuitry	Trip (A)	FN	A		B		FN	Trip (A)	Circuitry	Description	Ckt
2B:1	Bathroom	1/2"C,1#12,#12N,#12G	20		2.8 A	24....			GFI	50	3/4"C,2#6,#6N,#10G	Range	2B:2
2B:3	Master Bedroom	1/2"C,1#12,#12N,#12G	20	AFI			9.4 A	24....					2B:4
2B:5	Kitchen/Living/Hall Lights	1/2"C,1#12,#12N,#12G	20	AFI	0.9 A	14....			GFI	30	1/2"C,2#10,#10N,#10G	Clothes Dryer	2B:6
2B:7	Living Room Receptacles	1/2"C,1#12,#12N,#12G	20	AFI			7.5 A	14....					2B:8
2B:9	Refrigerator	1/2"C,1#12,#12N,#12G	20	AGI	1.5 A	22....			30		1/2"C,2#10,#10G	Electric Water Heating	2B:10
2B:11	Counter Top Receptacles	1/2"C,1#12,#12N,#12G	20	AGI			4.5 A	22....					2B:12
2B:13	Dishwasher	1/2"C,1#12,#12N,#12G	20	AGI	4.2 A	9.4 A			15		1/2"C,2#12,#12G	P-TAC Master Bedroom	2B:14
2B:15	Disposal	1/2"C,1#12,#12N,#12G	20	AGI			4.2 A	9.4 A					2B:16
2B:17	Counter Top Receptacles	1/2"C,1#12,#12N,#12G	20	AGI	4.5 A	9.4 A			15		1/2"C,2#12,#12G	P-TAC Living Room	2B:18
2B:19	Hood/Microwave	1/2"C,1#12,#12N,#12G	20	AGI			2.1 A	9.4 A					2B:20
2B:21	Spare Bedroom	1/2"C,1#12,#12N,#12G	20	AFI	9.3 A	9.4 A			15		1/2"C,2#12,#12G	P-TAC Spare Bedroom	2B:22
2B:23	Clothes Washer Receptacle	1/2"C,1#12,#12N,#12G	20	AFI			1.5 A	9.4 A					2B:24
2B:25	Space	--	--		--	--			--		--	Space	2B:26
2B:27	Surge Protector	--	20				0.0 A	--	--		--	Space	2B:28
2B:29	Surge Protector	--	20		0.0 A	--			--		--	Space	2B:30

Designation: 2BA

Installed Location: 2 Bedroom (Accessible)
Voltage: 120/208-1Ph-3W
Mounting: Flush
Enclosure: NEMA 1

Bus Amps: 100
MCB Amps: MLO
Features & Modifications: PROVIDE SURGE PROTECTION DEVICE

SCCR/AIC: 22.0 kA
Mains FN/Note: -

Ckt	Description	Circuitry	Trip (A)	FN	A		B		FN	Trip (A)	Circuitry	Description	Ckt
2BA:1	Bathroom	1/2"C,1#12,#12N,#12G	20		2.8 A	24....			GFI	50	3/4"C,2#6,#6N,#10G	Range	2BA:2
2BA:3	Master Bedroom	1/2"C,1#12,#12N,#12G	20	AFI			9.4 A	24....					2BA:4
2BA:5	Kitchen/Living/Hall Lights	1/2"C,1#12,#12N,#12G	20	AFI	0.9 A	14....			GFI	30	1/2"C,2#10,#10N,#10G	Clothes Dryer	2BA:6
2BA:7	Living Room Receptacles	1/2"C,1#12,#12N,#12G	20	AFI			7.5 A	14....					2BA:8
2BA:9	Refrigerator	1/2"C,1#12,#12N,#12G	20	AGI	1.5 A	22....			30		1/2"C,2#10,#10G	Electric Water Heating	2BA:10
2BA:11	Counter Top Receptacles	1/2"C,1#12,#12N,#12G	20	AGI			6.0 A	22....					2BA:12
2BA:13	Dishwasher	1/2"C,1#12,#12N,#12G	20	AGI	4.2 A	9.4 A			15		1/2"C,2#12,#12G	P-TAC Master Bedroom	2BA:14
2BA:15	Disposal	1/2"C,1#12,#12N,#12G	20	AGI			4.2 A	9.4 A					2BA:16
2BA:17	Counter Top Receptacles	1/2"C,1#12,#12N,#12G	20	AGI	4.5 A	9.4 A			15		1/2"C,2#12,#12G	P-TAC Living Room	2BA:18
2BA:19	Hood/Microwave	1/2"C,1#12,#12N,#12G	20	AGI			2.1 A	9.4 A					2BA:20
2BA:21	Spare Bedroom	1/2"C,1#12,#12N,#12G	20	AFI	7.8 A	9.4 A			15		1/2"C,2#12,#12G	P-TAC Spare Bedroom	2BA:22
2BA:23	Clothes Washer Receptacle	1/2"C,1#12,#12N,#12G	20	AFI			1.5 A	9.4 A					2BA:24
2BA:25	Space	--	--		--	--			--		--	Space	2BA:26
2BA:27	Surge Protector	--	20				0.0 A	--	--		--	Space	2BA:28
2BA:29	Surge Protector	--	20		0.0 A	--			--		--	Space	2BA:30

Designation: 1B

Installed Location: 1 Bedroom
Voltage: 120/208-1Ph-3W
Mounting: Flush
Enclosure: NEMA 1

Bus Amps: 100
MCB Amps: MLO
Features & Modifications: PROVIDE SURGE PROTECTION DEVICE

SCCR/AIC: 22.0 kA
Mains FN/Note: -

Ckt	Description	Circuitry	Trip (A)	FN	A		B		FN	Trip (A)	Circuitry	Description	Ckt
1B:1	Bathroom	1/2"C,1#12,#12N,#12G	20		2.8 A	24....			GFI	50	3/4"C,2#6,#6N,#10G	Range	1B:2
1B:3	Master Bedroom	1/2"C,1#12,#12N,#12G	20	AFI			9.3 A	24....					1B:4
1B:5	Kitchen/Living/Hall Lights	1/2"C,1#12,#12N,#12G	20	AFI	0.7 A	1.5 A			AFI	20	1/2"C,1#12,#12N,#12G	Clothes Washer Receptacle	1B:6
1B:7	Living Room Receptacles	1/2"C,1#12,#12N,#12G	20	AFI			6.0 A	14....	GFI	30	1/2"C,2#10,#10N,#10G	Clothes Dryer	1B:8
1B:9	Refrigerator	1/2"C,1#12,#12N,#12G	20	AGI	1.5 A	14....							1B:10
1B:11	Counter Top Receptacles	1/2"C,1#12,#12N,#12G	20	AGI			4.5 A	22....		30	1/2"C,2#10,#10G	Electric Water Heating	1B:12
1B:13	Dishwasher	1/2"C,1#12,#12N,#12G	20	AGI	4.2 A	22....							1B:14
1B:15	Disposal	1/2"C,1#12,#12N,#12G	20	AGI			4.2 A	9.4 A		15	1/2"C,2#12,#12G	P-TAC Master Bedroom	1B:16
1B:17	Counter Top Receptacles	1/2"C,1#12,#12N,#12G	20	AGI	4.5 A	9.4 A							1B:18
1B:19	Hood/Microwave	1/2"C,1#12,#12N,#12G	20	AGI			2.1 A	9.4 A		15	1/2"C,2#12,#12G	P-TAC Living Room	1B:20
1B:21	Surge Protector	--	20		0.0 A	9.4 A							1B:22
1B:23	Surge Protector	--	20				0.0 A	--		--	--	Space	1B:24

Designation: 1BA

Installed Location: 1 Bedroom (Accessible)
Voltage: 120/208-1Ph-3W
Mounting: Flush
Enclosure: NEMA 1

Bus Amps: 100
MCB Amps: MLO
Features & Modifications: PROVIDE SURGE PROTECTION DEVICE

SCCR/AIC: 22.0 kA
Mains FN/Note: -

Ckt	Description	Circuitry	Trip (A)	FN	A		B		FN	Trip (A)	Circuitry	Description	Ckt
1BA:1	Bathroom	1/2"C,1#12,#12N,#12G	20		2.8 A	24....			GFI	50	3/4"C,2#6,#6N,#10G	Range	1BA:2
1BA:3	Master Bedroom	1/2"C,1#12,#12N,#12G	20	AFI			9.3 A	24....					1BA:4
1BA:5	Kitchen/Living/Hall Lights	1/2"C,1#12,#12N,#12G	20	AFI	0.7 A	1.5 A			AFI	20	1/2"C,1#12,#12N,#12G	Clothes Washer Receptacle	1BA:6
1BA:7	Living Room Receptacles	1/2"C,1#12,#12N,#12G	20	AFI			6.0 A	14....	GFI	30	1/2"C,2#10,#10N,#10G	Clothes Dryer	1BA:8
1BA:9	Refrigerator	1/2"C,1#12,#12N,#12G	20	AGI	1.5 A	14....							1BA:10
1BA:11	Counter Top Receptacles	1/2"C,1#12,#12N,#12G	20	AGI			6.0 A	22....		30	1/2"C,2#10,#10G	Electric Water Heating	1BA:12
1BA:13	Dishwasher	1/2"C,1#12,#12N,#12G	20	AGI	4.2 A	22....							1BA:14
1BA:15	Disposal	1/2"C,1#12,#12N,#12G	20	AGI			4.2 A	9.4 A		15	1/2"C,2#12,#12G	P-TAC Master Bedroom	1BA:16
1BA:17	Counter Top Receptacles	1/2"C,1#12,#12N,#12G	20	AGI	4.5 A	9.4 A							1BA:18
1BA:19	Hood/Microwave	1/2"C,1#12,#12N,#12G	20	AGI			2.1 A	9.4 A		15	1/2"C,2#12,#12G	P-TAC Living Room	1BA:20
1BA:21	Surge Protector	--	20		0.0 A	9.4 A							1BA:22
1BA:23	Surge Protector	--	20				0.0 A	--		--	--	Space	1BA:24

Panelboard: P1

Location: Mech 108
Supply: H1
Mounting: Surface
Enclosure: NEMA 1

Voltage: 208 V, 3Ø, 4W
Bus Rating: 225 A
Neutral: 100%
Feed-Thru Lugs: No
Features & Modifications: -

Mains Type: MCB
Mains Rating: 200 A
Mains FN/Note: -
SCCR: 22 kA

Ckt	Description	Circuitry	Trip (A)	FN	A KVA		B KVA		C KVA		FN	Trip (A)	Circuitry	Description	Ckt
P1:1	LTG - Clubhouse	1/2"C,1#12,#12N,#12G	20		0.73	0.72						20	1/2"C,1#12,#12N,#12G	RCPT - 102 Office	P1:2
P1:3	LTG - 1st Floor Hall	1/2"C,1#12,#12N,#12G	20				0.72	0.72				20	1/2"C,1#12,#12N,#12G	RCPT - 102 Office (Controlled)	P1:4
P1:5	LTG - Exterior Bldg Mounted	1/2"C,1#12,#12N,#12G	20						0.21	0.9		20	1/2"C,1#12,#12N,#12G	RCPT - 106 Storage, 107 Fire	P1:6
P1:7	LTG - Parking Lot	1/2"C,2#12,#12G	20		0.21	0.18						20	1/2"C,1#12,#12N,#12G	RCPT - Drinking Fountain	P1:8
P1:9							0.21	0.9				20	1/2"C,1#12,#12N,#12G	RCPT - Exterior	P1:10
P1:11	LTG - Monument Sign	1/2"C,1#12,#12N,#12G	20						0.22	0.98		15	1/2"C,2#12,#12G	PTAC - 1st Floor Elev Lobby	P1:12
P1:13	Heat Pump HP-1	1/2"C,2#10,#10G	25		1.22	0.98									P1:14
P1:15	15 MCA						1.22	0.98				15	1/2"C,2#10,#10G	PTAC - 1st Floor East Hall	P1:16
P1:17	Blower Coil BC-1	1/2"C,2#10,#10G	25						2.21	0.98					P1:18
P1:19	3.6 KW Backup Electric Heat				2.21	0.98						15	1/2"C,2#10,#10G	PTAC - 1st Floor North Stair	P1:20
P1:21	Electric Heat	1/2"C,2#12,#12G	20				1.5	0.98							P1:22
P1:23									1.5	0.18		20	1/2"C,1#12,#12N,#12G	RCPT - Elev Sump Pump	P1:24
P1:25	Water Heater	1/2"C,2#10,#10G	30		2.25	2.02						30	1/2"C,1#10,#10N,#10G	Elevator Sump Pump Alarm Panel	P1:26
P1:27							2.25	0.36				20	1/2"C,1#12,#12N,#12G	Fire Alarm Control Panel	P1:28
P1:29	Hot Water Recirc Pump HWP	1/2"C,1#12,#12N,#12G	20						0.12	0.9		20	1/2"C,1#12,#12N,#12G	RCPT - 101 Community	P1:30
P1:31	RCPT - 1st Floor Hall	1/2"C,1#12,#12N,#12G	20		1.08	0.05						20	1/2"C,1#12,#12N,#12G	Lighting Controls	P1:32
P1:33	LTG - Elevator Pit	1/2"C,1#12,#12N,#12G	20				0.02	0.1				20	1/2"C,1#12,#12N,#12G	Automatic Door Opener Controls	P1:34
P1:35	RCPT - Elevator Pit	1/2"C,1#12,#12N,#12G	20						0.36	0.36		20	1/2"C,1#12,#12N,#12G	Fire Sprinkler Flow/Bell	P1:36
P1:37	RCPT - Telecom Backboard	1/2"C,1#12,#12N,#12G	20		0.36										P1:38
P1:39	RCPT - Telecom Backboard	1/2"C,1#12,#12N,#12G	20				0.36								P1:40
P1:41	RCPT - Mech 108, Elev Lobby	1/2"C,1#12,#12N,#12G	20						0.54						P1:42
				Connecte...	13 kVA		10 kVA		9 kVA						
				Connecte...	109 A		87 A		79 A						

Load Classification	Connected	Factor	Demand
Motor	8912 VA	112.41%	10018 VA
Other	1180 VA	100.00%	1180 VA
Lighting - Interior	2112 VA	125.00%	2640 VA
Receptacle - General	7200 VA	100.00%	7200 VA
Electric Water Heating	4500 VA	125.00%	5625 VA
Electric Heat	8880 VA	125.00%	11100 VA

Panel Totals	
Connected Load:	33 kVA
Connected Current:	91 A
Demand Load:	38 kVA
Demand Current:	105 A

Panelboard: P3

Location: Mech 301
Supply: P2
Mounting: Surface
Enclosure: NEMA 1

Voltage: 208 V, 3Ø, 4W
Bus Rating: 100 A
Neutral: 100%
Feed-Thru Lugs: No
Features & Modifications: -

Mains Type: MLO
Mains Rating: 100 A
Mains FN/Note: -
SCCR: 22 kA

Ckt	Description	Circuitry	Trip (A)	FN	A KVA		B KVA		C KVA		FN	Trip (A)	Circuitry	Description	Ckt
P3:1	LTG - 3rd Floor	1/2"C,1#12,#12N,#12G	20		0.63	0.98						15	1/2"C,2#12,#12G	PTAC - 3rd Floor Elev Lobby	P3:2
P3:3	RCPT - 3rd Floor Telecomm Backboard	1/2"C,1#12,#12N,#12G	20				0.36	0.98							P3:4
P3:5	RCPT - 3rd Floor Telecomm Backboard	1/2"C,1#12,#12N,#12G	20						0.36	0.98		15	1/2"C,2#12,#12G	PTAC - 3rd Floor Hall West	P3:6
P3:7	RCPT - 3rd Floor Elev Lobby/Elec Room	1/2"C,1#12,#12N,#12G	20		0.54	0.98									P3:8
P3:9	RCPT - 3rd Floor Hall	1/2"C,1#12,#12N,#12G	20				1.08	0.98				15	1/2"C,2#12,#12G	PTAC - 3rd Floor Hall East	P3:10
P3:11	PTAC - 3rd Floor N. Stair	1/2"C,2#10,#10G	15						0.98	0.98					P3:12
P3:13					0.98										P3:14
P3:15															P3:16
P3:17															P3:18
P3:19															P3:20
P3:21															P3:22
P3:23															P3:24
				Connecte...	4 kVA		3 kVA		3 kVA						
				Connecte...	34 A		28 A		28 A						

Load Classification	Connected	Factor	Demand
Lighting - Interior	633 VA	125.00%	791 VA
Receptacle - General	2340 VA	100.00%	2340 VA
Electric Heat	7840 VA	125.00%	9800 VA

Panel Totals	
Connected Load:	11 kVA
Connected Current:	30 A
Demand Load:	13 kVA
Demand Current:	36 A

Panelboard: P2

Location: Mech 201
Supply: H1
Mounting: Surface
Enclosure: NEMA 1

Voltage: 208 V, 3Ø, 4W
Bus Rating: 100 A
Neutral: 100%
Feed-Thru Lugs: Yes
Features & Modifications: -

Mains Type: MLO
Mains Rating: 100 A
Mains FN/Note: -
SCCR: 22 kA

Ckt	Description	Circuitry	Trip (A)	FN	A KVA		B KVA		C KVA		FN	Trip (A)	Circuitry	Description	Ckt
P2-1	LTG - 2nd Floor	1/2"C,1#12,#12N,#12G	20		0.63	0.98						15	1/2"C,2#12,#12G	PTAC - 2nd Floor Elev Lobby	P2-2
P2-3	RCPT - 2nd Floor Telecomm Backboard	1/2"C,1#12,#12N,#12G	20				0.36	0.98							P2-4
P2-5	RCPT - 2nd Floor Telecomm Backboard	1/2"C,1#12,#12N,#12G	20						0.36	0.98		15	1/2"C,2#12,#12G	PTAC - 2nd Floor Hall West	P2-6
P2-7	RCPT - 2nd Floor Elev Lobby/Elec Room	1/2"C,1#12,#12N,#12G	20		0.54	0.98									P2-8
P2-9	RCPT - 2nd Floor Hall	1/2"C,1#12,#12N,#12G	20				1.08	0.98				15	1/2"C,2#12,#12G	PTAC - 2nd Floor Hall East	P2-10
P2-11	Elevator Cab Lights	1/2"C,1#12,#12N,#12G	20						0.36	0.98					P2-12
P2-13	Elevator Shunt Trip Power	1/2"C,1#12,#12N,#12G	20		0.36										P2-14
P2-15															P2-16
P2-17															P2-18
P2-19															P2-20
P2-21															P2-22
P2-23															P2-24
				Connecte...	8 kVA		7 kVA		6 kVA						
				Connecte...	64 A		58 A		50 A						

(Includes load connected via feed-thru lugs.)

Load Classification	Connected	Factor	Demand
Other	720 VA	100.00%	720 VA
Lighting - Interior	1260 VA	125.00%	1576 VA
Receptacle - General	4680 VA	100.00%	4680 VA
Electric Heat	13720 VA	125.00%	17150 VA

Panel Totals	
Connected Load:	20 kVA
Connected Current:	57 A
Demand Load:	24 kVA
Demand Current:	67 A

LST Consulting Engineers, PA
MANHATTAN
4809 Vue Du Lac Place, Suite 201
Manhattan, KS 66503
785.587.8042
WICHITA
125 S. Washington, Suite 150
Wichita, KS 67202
316.285.0696
www.LSTengineers.com
mail@LSTengineers.com

Project 24034 11/15/2024

JonesGillamRenz
730 N. Ninth
Salina, KS 67401
785.827.0386
1881 Main Street, Suite 301
Kansas City, MO 64108
jgr@jgrarchitects.com

RESIDENCE AT GREEN MEADOW
NEW SENIOR LIVING FACILITY
SAN ANGELO, TEXAS

STATE OF TEXAS
TIMOTHY C. TREDWAY
95252
LICENSED PROFESSIONAL ENGINEER
11-15-2024

REVISIONS:

DATE: 11/15/2024
JOB: 24-3395
SHEET NO.:

E6.3

COPYRIGHTED ©

LST Consulting Engineers, PA
MANHATTAN
4809 Vue Du Lac Place, Suite 201
Manhattan, KS 66503
785.587.8042
WICHITA
125 S. Washington, Suite 150
Wichita, KS 67202
316.285.0696
www.LSTengineers.com
mail@LSTengineers.com

Project 24034 **11/15/2024**

General Plan Symbols

- Plan Revision Number
- Detail Number on Sheet
- Sheet Number Where Detail is Placed
- Keynote Symbol
- Continuation Symbol
- Point Where New Connects To Existing
- Room 1 — Room Name / Number
- Area Being Demolished
- Area Not In Contract

Abbreviations

Ø	ROUND	LVR	LOUVER
ABV	ABOVE	LWT	LEAVING WATER TEMPERATURE
AC	AIR CONDITIONING	M/A	MIXED AIR
AD	AREA DRAIN	MAX	MAXIMUM
ADD	ADDENDUM	MBH	ONE THOUSAND BTU PER HOUR
AFF	ABOVE FINISHED FLOOR	MCF	ONE THOUSAND CUBIC FEET
AFUE	ANNUAL FUEL UTILIZATION EFFICIENCY	MD	MOTORIZED DAMPER
ALT	ALTERNATE	MECH	MECHANICAL
AP	ACCESS PANEL	MFR	MANUFACTURER
ARCH	ARCHITECT/ARCHITECTURAL	MIN	MINIMUM
BFF	BELOW FINISHED FLOOR	MISC	MISCELLANEOUS
BLW	BELOW	MTR	MOTOR
BTU	BRITISH THERMAL UNITS	MU/A	MAKE-UP/AIR
BTUH	BRITISH THERMAL UNITS PER HOUR	NC	NOISE CRITERIA
CAP	CAPACITY	NC	NORMALLY CLOSED
CB	CATCH BASIN	NIC	NOT IN CONTRACT
CFM	CUBIC FEET PER MINUTE	NO	NUMBER
CLG	CEILING	NO	NORMALLY OPEN
CO	CLEAN OUT	NTS	NOT TO SCALE
CW	COLD WATER	O	OXYGEN
D	DEGREE	O/A	OUTSIDE AIR
DB	DRY BULB	ORD	OVERFLOW ROOF DRAIN
DIA	DIAMETER	PD	PRESSURE DROP
DN	DOWN	PIV	POST INDICATOR VALVE
DW	DISTILLED WATER	PLBG	PLUMBING
EA	EACH	PRESS	PRESSURE
EAT	ENTERING AIR TEMPERATURE	PRV	PRESSURE REDUCING VALVE
ELEC	ELECTRICAL	PSI	POUNDS PER SQUARE INCH
EQUIP	EQUIPMENT	PSIG	POUNDS PER SQUARE INCH GAUGE
EWC	ELECTRIC WATER COOLER	PWR	POWER
EWT	ENTERING WATER TEMPERATURE	R	DUCT RISER
E/A	EXHAUST AIR	R/A	RETURN AIR
EXIST	EXISTING	RCP	RADIANT CEILING PANEL
F	DEGREES FAHRENHEIT	RD	ROOF DRAIN
FCO	FLOOR CLEAN OUT	REC	RECESSED
FD	FLOOR DRAIN	RED	REDUCER
FDC	FIRE DEPARTMENT CONNECTION	RH	RELATIVE HUMIDITY
FL	FLOOR	RL/A	RELIEF AIR
FO	FUEL OIL	RM	ROOM
FOV	FUEL OIL VENT	RPM	REVOLUTIONS PER MINUTE
FOR	FUEL OIL RETURN	RW	RAIN WATER
FOS	FUEL OIL SUPPLY	SF	SQUARE FOOT
FPM	FEET PER MINUTE	S/A	SUPPLY AIR
FS	FLOOR SINK	SAN	SANITARY
FT	FOOT/FEET	SF	SQUARE FOOT
FTR	FIN TUBE RADIATION	SD	SMOKE DAMPER
GAL	GALLON	SM	SURFACE MOUNT
GF	GAS-FIRED	SP	STANDPIPE
GC	GENERAL CONTRACTOR	SP	STATIC PRESSURE
GPM	GALLONS PER MINUTE	STM	STEAM
GW	GREASE WASTE	T	THERMOSTAT
HB	HOSE BIB	TD	TEMPERATURE DROP
HP	HORSE POWER	TDR	TRENCH DRAIN
HTG	HEATING	TEMP	TEMPERATURE
HTR	HEATER	TYP	TYPICAL
HW	HOT WATER	UG	UNDERGROUND
HYD	HYDRANT	VAC	VACUUM
ID	INDIRECT	V	VENT
IN	INCH	VAV	VARIABLE AIR VOLUME
INV	INVERT	VENT	VENTILATION
LB	POUND	VTR	VENT THROUGH ROOF
LB/HR	POUNDS PER HOUR	W	WASTE
LAT	LEAVING AIR TEMPERATURE	WB	WET BULB
LP	LOW PRESSURE	WCO	WALL CLEAN OUT
LPG	LIQUEFIED PETROLEUM GAS	WH	WALL HYDRANT

Equipment Abbreviations

AC	AIR CONDITIONING UNIT	ET	EXPANSION TANK
ACCU	AIR COOLING CONDENSING UNIT	EWH	ELECTRIC WATER HEATER
AHU	AIR HANDLING UNIT	FCU	FAN COIL UNIT
AS	AIR SEPARATOR	FP	FIRE PUMP
B	BOILER	GI	GREASE INTERCEPTOR
CH	CHILLER	GRV	GRAVITY ROOF VENTILATOR
CT	COOLING TOWER	HWP	HEATING WATER PUMP
CUH	CABINET UNIT HEATER	HRU	HEAT RECOVERY UNIT
CHWP	CHILLED WATER PUMP	PRV	POWER ROOF VENTILATOR
DBP	DOMESTIC WATER BOOSTER PUMP	RE	RETURN/EXHAUST FAN
DC	DUCT MOUNTED COIL	RTU	ROOFTOP UNIT
DCP	DOMESTIC WATER CIRCULATING PUMP	SP	SUMP PUMP
EF	EXHAUST FAN	UH	UNIT HEATER
EDC	ELECTRIC DUCT COIL	WH	WATER HEATER

* NOTE *
ALL OF GENERAL NOTES ON THIS SHEET ARE TO BE APPLIED TO ALL OTHER DRAWINGS IN THIS SET.THE SYMBOLS AND ABBREVIATIONS SHOWN ON THIS SHEET MAY OR MAY NOT BE USED IN THIS SET OF DRAWINGS.

HVAC Symbols

- 24"/12" — Sq. Duct Size (Width/Height)
- 24"x12"FO — Oval Duct Size (Width x Height)
- 18"Ø — Round Duct Size (Diameter)
- (E) — Existing Duct To Remain
- Duct To Be Demolished
- S/A — Supply Air
- V/A — Ventilation Air
- O/A — Outdoor Air
- R/A — Return Air
- T/A — Transfer Air
- E/A — General Exhaust Air
- KED — Kitchen Exhaust Duct
- FLUE — Flue Gas Vent
- C/A — Combustion Air
- Rect. Supply Duct Rise / Drop
- Round Supply Duct Rise / Drop
- Rect. Return Duct Rise / Drop
- Round Return Duct Rise / Drop
- Rect. Exhaust Duct Rise / Drop
- Round Exhaust Duct Rise / Drop

Grille, Register, Diffusers

Square Ceiling Diffuser — CD3 | 500 / 10"Ø/24x24 — Type (See Schedule); Airflow; Neck Size / Module Size

Round Ceiling Diffuser — CD11 | 100 / 6"Ø / TYP. X 4 — Type (See Schedule); Airflow; Neck Size; Type Count for Space

Sidewall Supply Grille — SG1 | 500 / 18"/10" / AFF:9'-0" — Type (See Schedule); Airflow; Nominal Duct Size; Mounting Elevation (Centerline)

Linear Diffuser — LD8 | 200 / 8"Ø/2s/4'-0"L — Type (See Schedule); Airflow; Neck Size/ Slot(s)/ Active Length

Sidewall Return Grille — RG1 | 800 / 16"/16" / AFF:9'-0" — Type (See Schedule); Airflow; Nominal Duct Size; Mounting Elevation (Centerline)

Ceiling Return — RG2 | 500 / 12"/12"/24x24 / 25 — Type (See Schedule); Airflow; Neck Size / Module Size; Max NC Rating

Mechanical Equipment

- RTU-1 / 10.0 ton — Unit Identity; Nominal Cooling Capacity
- RTU-1 / 180000 Btu/h / 180 CFH — Heating Capacity; Gas Supply Input Rate
- ET-1 / 379 lb — Operating Weight
- EF-XX / 500 CFM — Design Airflow Rate
- VAV 1-2 / 3.7 GPM — Design Water Flow
- AC-1 / AFF:7'-0" — Bottom of Equipment Height
- (E)AHU-2 — Existing to Remain Equipment
- (R)AHU-3 — Existing Relocated Equipment
- Equipment By Others (Refer To Other Disciplines)

Damper Types

- Manual Damper
- Motorized Damper
- Backdraft Damper
- Smoke Damper
- Fire Damper
- Comb. Fire/ Smoke Damper
- Ceiling Radiation Damper

Mechanical Piping Symbols

- 2" — Nominal Pipe Size
- Above Ground Piping
- Below Ground Piping
- 1/8" / 12" SLOPE — Pipe Slope (When Applicable)
- (E) — Existing Pipe To Remain
- Pipe To Be Demolished
- CHWR — Chilled-Water Return
- CHWS — Chilled-Water Supply
- CD — Condensate Drain
- CWR — Condenser-Water Return
- CWS — Condenser-Water Supply
- GWR — Geothermal-Water Return
- GWS — Geothermal-Water Supply
- HWR — Hot-Water Return
- HWS — Hot-Water Supply
- G — Natural Gas
- LP — Liquid Propane
- RL — Refrigerant Liquid
- RS — Refrigerant Gas
- RD — Refrigerant Discharge
- STM — Steam Supply
- CDR — Steam Condensate Return
- Pipe Rise / Drop

Valve Types

- 2" SHUTOFF — Ball Valve
- 2" BAL — Balancing Valve
- 2" BFV — Butterfly Valve
- 2" CHECK — Check Valve
- 2" CHECK — Alternate Check Valve
- 3" CIRC — Circuit Setter
- 2" GATE — Gate Valve
- 2" GLOBE — Globe Valve
- 2" LOCK — Locked Shield Valve
- 2" PRV — Pressure Reducing Valve
- 2" QUICK — Quick Opening Valve
- 2" STRAIN — Fluid Strainer
- 2" M-CNTRL — Elec. Control Valve
- 4" 3-WAY CNTRL — 3-Way Elec. Valve
- 1" GAS-CNTRL — Emergency Gas Shutoff
- 1" PLUG — Plug Valve
- 1" GAS COCK — Gas Shutoff Cock
- 1" REG — Gas Regulator

Mechanical Control Devices

- AHU-1 — Unit Identity
- TS — Temperature Sensor
- TH — Temp/ Humidity Sensor
- TC — Temp/ CO2 Sensor
- T — Thermostat
- H — Humidistat
- HS — Humidity Sensor
- CO2 — Carbon Dioxide Detector
- CO — Carbon Monoxide Detector
- H2 — Hydrogen Gas Detector
- HZG — Hazardous Gas Detector
- NO2 — Nitrogen Dioxide Detector
- O2 — Oxygen Gas Detector

HVAC SHEET INDEX

M0.1	HVAC TITLE SHEET
M1.1	HVAC PLANS
M1.2	HVAC PLANS
M6.1	HVAC SCHEDULES

GENERAL HVAC NOTES

A. CONTRACTOR SHALL LOCATE TOP OF THERMOSTATS AND HUMIDISTATS AT 4'-0" AFF UNLESS NOTED OTHERWISE. MAINTAIN A MINIMUM HORIZONTAL SEPARATION OF 8" FROM LIGHT SWITCHES.
B. CONDENSATE DRAINS SHALL BE SUPPLIED FOR ALL COOLING EQUIPMENT. CONTRACTOR SHALL ENSURE PROPER INSTALLATION AND DRAINAGE AS REQUIRED BY FEDERAL, STATE, AND LOCAL CODES. CONDENSATE PIPING SHALL BE TYPE "L" COPPER. WHERE INSTALLED ABOVE CEILINGS, CONDENSATE DRAIN PIPING SHALL BE INSULATED WITH MINIMUM 1/2" FIBERGLASS PIPE INSULATION WITH ALL SERVICE JACKET.
C. ALL SUPPLY, RETURN, AND EXHAUST DUCTWORK SHALL BE RATED FOR PRESSURE CLASS OF 2" W.G. UNLESS NOTED OTHERWISE.
D. COORDINATE THE EXACT LOCATION OF ALL CEILING DIFFUSERS, REGISTERS, AND GRILLES WITH LIGHTING.
E. PROVIDE DIFFUSERS AND REGISTERS WITH 4-WAY BLOW PATTERN UNLESS OTHERWISE NOTED.
F. HVAC EQUIPMENT SHALL NOT BE UTILIZED UNTIL ALL DUCT PRODUCING CONSTRUCTION ACTIVITY HAS BEEN COMPLETED. CONTRACTOR SHALL BE REQUIRED TO OBTAIN APPROVAL FROM OWNER PRIOR TO EQUIPMENT STARTUP, AND TO REPLACE FILTERS ON HVAC EQUIPMENT UPON FINAL COMPLETION.
G. LOCATIONS OF PIPING, DUCTWORK AND EQUIPMENT AS INDICATED ON THE DRAWINGS ARE APPROXIMATE AND SUBJECT TO MINOR ADJUSTMENTS IN THE FIELD. WORK SHALL BE COORDINATED WITH ALL OTHER TRADES TO AVOID INTERFERENCE IN THE FIELD.
H. FINAL PRODUCT SHALL BE A COMPLETE AND FUNCTIONING SYSTEM, AND SHALL CONFORM TO ALL REQUIREMENTS OF APPLICABLE FEDERAL, STATE, AND LOCAL CODES, INCLUDING BUT NOT LIMITED TO THE INTERNATIONAL BUILDING CODE AND INTERNATIONAL MECHANICAL CODE.
I. LOCATE EQUIPMENT REQUIRING ACCESS 2'-0" MAXIMUM ABOVE CEILING.
J. ALL ROOF MOUNTED EQUIPMENT SHALL BE A MINIMUM 10'-0" FROM EDGE OF ROOFS WITHOUT A 42" HIGH PARAPET OR GUARD RAIL. WHERE PROVIDING 10'-0" SEPARATION FROM ROOF EDGE IS NOT POSSIBLE, PROVIDE PERMANENT FALL ARREST ANCHORS COMPLIANT WITH ANSI/ASSP Z359.1. COORDINATE WITH GENERAL CONTRACTOR.
K. LOCATE DUCTWORK, PIPING AND MECHANICAL EQUIPMENT OUTSIDE OF THE NEC REQUIRED CLEAR SPACE ABOVE AND AROUND ELECTRICAL PANELS, TRANSFORMERS AND OTHER ELECTRICAL EQUIPMENT. COORDINATE WITH ELECTRICAL CONTRACTOR.
L. PENETRATIONS OF RATED ASSEMBLIES SHALL BE FIRE STOPPED. FIRE STOPPING SHALL BE U.L. LISTED. SEE ARCHITECTURAL DRAWINGS FOR LOCATIONS OF RATED ASSEMBLIES.
M. PROVIDE SLEEVES AND/OR OPENINGS TO RUN PIPES AND DUCTS THROUGH FOUNDATIONS, FLOORS, WALLS, AND ROOF.
N. MAINTAIN CLEAR ACCESS TO SERVICE EQUIPMENT AND OTHER ACCESSORIES REQUIRING SERVICE, VISUAL INSPECTION OR HAND OPERATION. WHERE INDICATED OR REQUIRED, PROVIDE ACCESS PANELS OF THE TYPE SELECTED TO SUIT MATERIALS IN WHICH INSTALLED.
O. TRANSITION FROM PIPING AND DUCTWORK SIZES SHOWN TO PROPERLY CONNECT TO MECHANICAL EQUIPMENT.
P. PIPE SIZES SHOWN SHALL BE CONTINUED IN THE DIRECTION OF FLOW UNTIL ANOTHER SIZE IS SHOWN.
Q. INSTALL ALL EQUIPMENT IN ACCORDANCE WITH THE RESPECTIVE MANUFACTURER'S WRITTEN INSTALLATION INSTRUCTIONS, AT A LEVEL OF QUALITY AND WORKMANSHIP CONSISTENT WITH THE SPECIFICATIONS.
R. INSTALL EXPOSED PIPING AND DUCTWORK AS HIGH AS PRACTICAL IN ROOMS WITHOUT CEILINGS.
S. PRIOR TO STARTING WORK, SUBMIT SHOP DRAWINGS FOR ALL MECHANICAL EQUIPMENT AND MATERIALS. SUBSTITUTE EQUIPMENT INSTALLED WITHOUT PRIOR APPROVAL SHALL BE SUBJECT TO REPLACEMENT AT CONTRACTOR'S EXPENSE.
T. CONTRACTOR SHALL OBTAIN AND PAY FOR ALL NECESSARY PERMITS AND SHALL ARRANGE FOR ALL INSPECTIONS AS REQUIRED.
U. PROVIDE ONE YEAR WARRANTY FOR ALL WORKMANSHIP AND MATERIALS AFTER THE DATE OF FINAL ACCEPTANCE.

JonesGillamRenz
730 N. Ninth
Salina, KS 67401
785.827.0386
1881 Main Street, Suite 301
Kansas City, MO 64108
jgr@jgrarchitects.com

RESIDENCE AT GREEN MEADOW
NEW SENIOR LIVING FACILITY
SAN ANGELO, TEXAS

STATE OF TEXAS
TIMOTHY C. TREDWAY
95252
LICENSED PROFESSIONAL ENGINEER
11-15-2024

REVISIONS:

DATE: 11/15/2024
JOB: 24-3395
SHEET NO.:

M0.1

COPYRIGHTED ©

LST Consulting Engineers, PA
MANHATTAN
4809 Vue Du Lac Place, Suite 201
Manhattan, KS 66503
785.587.8042
WICHITA
125 S. Washington, Suite 150
Wichita, KS 67202
316.285.0696
www.LSTengineers.com
mail@LSTengineers.com

Project 24034 **11/15/2024**

NOTES BY SYMBOL

1. MOUNT HEAT PUMP ON LEVEL 3-1/2" THICK CONCRETE PAD. COORDINATE WITH G.C.
2. PROVIDE UL LISTED DRYER BOX EQUAL TO IN-O-VATE TECHNOLOGIES IN WALL INSTALLED IN ACCORDANCE WITH MANUFACTURER'S RECOMMENDATIONS, AND ROUTE 4"Ø DRYER EXHAUST DUCT TO WALL CAP WITH BACKDRAFT DAMPER. MAXIMUM ALLOWABLE EQUIVALENT DUCT LENGTH = 35'. UTILIZE LONG RADIUS SMOOTH ELBOWS WHERE REQUIRED. MAXIMUM EQUIVALENT DUCT LENGTH MAY BE INCREASE WHERE DRYER MANUFACTURER'S INSTALLATION INSTRUCTIONS ALLOW, AND DOCUMENTATION IS PROVIDED TO CODE OFFICIAL PRIOR TO CONCEALMENT INSPECTION. COORDINATE EXACT REQUIREMENTS WITH EQUIPMENT PROVIDED. PROVIDE PERMANENT LABEL IDENTIFYING EQUIVALENT LENGTH OF DRYER DUCT INSTALLED PER IMC 504. NOTE: ANNULAR SPACE AROUND DUCT IS TO BE SEALED AT ALL PENETRATIONS OF FLOORS AND CEILINGS WITH U.L. LISTED FIRE STOPPING SYSTEM.
3. ROUTE 6" DIAMETER OUTDOOR AIR DUCT TO SOFFIT VENT WITH BIRDSCREEN, AND BALANCE OUTDOOR AIR TO 85 CFM.
4. PROVIDE WALL MOUNTED THERMOSTAT FOR EACH PTAC IN APARTMENTS. COORDINATE FINAL LOCATION WITH OWNER.
5. ROUTE 4"Ø EXHAUST DUCT TO MANUFACTURER'S ROOF JACK WITH BACKDRAFT DAMPER AND BIRD SCREEN, COORDINATE ROUTING WITH STRUCTURE.
6. ROUTE 4"Ø EXHAUST DUCT TO MANUFACTURER'S WALL CAP WITH BACKDRAFT DAMPER, COORDINATE ROUTING WITH STRUCTURE.
7. ROUTE REFIRIGERANT PIPING FROM BLOWER COIL TO HEAT PUMP. CONCEAL PIPING IN WALLS AND ABOVE CEILINGS. UTILIZE WALL PENETRATION ASSEMBLE EQUAL TO AIREX TITAN OUTLET.

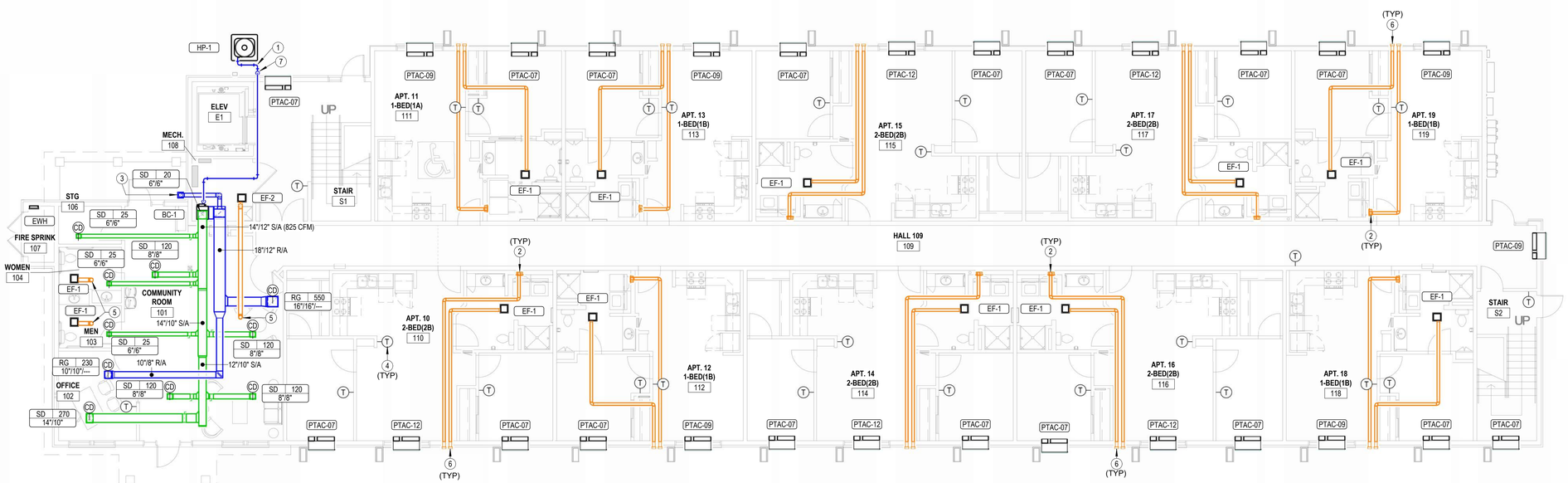

1 / M1.1 FIRST FLOOR HVAC PLAN
1/8" = 1'-0"

JonesGillamRenz
730 N. Ninth
Salina, KS 67401
785.827.0386
1881 Main Street, Suite 301
Kansas City, MO 64108
jgr@jgrarchitects.com

RESIDENCE AT GREEN MEADOW
NEW SENIOR LIVING FACILITY
SAN ANGELO, TEXAS

STATE OF TEXAS
TIMOTHY C. TREDWAY
95252
LICENSED PROFESSIONAL ENGINEER
11-15-2024

REVISIONS:

DATE: 11/15/2024
JOB: 24-3395
SHEET NO.:

M1.1

COPYRIGHTED ©

LST Consulting Engineers, PA
MANHATTAN
4809 Vue Du Lac Place, Suite 201
Manhattan, KS 66503
785.587.8042
WICHITA
125 S. Washington, Suite 150
Wichita, KS 67202
316.285.0696
www.LSTengineers.com
mail@LSTengineers.com

Project 24034 **11/15/2024**

NOTES BY SYMBOL

1. ROUTE 4"Ø EXHAUST DUCT TO MANUFACTURER'S WALL CAP WITH BACKDRAFT DAMPER, COORDINATE ROUTING WITH STRUCTURE.
2. PROVIDE UL LISTED DRYER BOX EQUAL TO IN-O-VATE TECHNOLOGIES IN WALL INSTALLED IN ACCORDANCE WITH MANUFACTURER'S RECOMMENDATIONS, AND ROUTE 4"Ø DRYER EXHAUST DUCT TO WALL CAP WITH BACKDRAFT DAMPER. MAXIMUM ALLOWABLE EQUIVALENT DUCT LENGTH = 35'. UTILIZE LONG RADIUS SMOOTH ELBOWS WHERE REQUIRED. MAXIMUM EQUIVALENT DUCT LENGTH MAY BE INCREASE WHERE DRYER MANUFACTURER'S INSTALLATION INSTRUCTIONS ALLOW, AND DOCUMENTATION IS PROVIDED TO CODE OFFICIAL PRIOR TO CONCEALMENT INSPECTION. COORDINATE EXACT REQUIREMENTS WITH EQUIPMENT PROVIDED. PROVIDE PERMANENT LABEL IDENTIFYING EQUIVALENT LENGTH OF DRYER DUCT INSTALLED PER IMC 504. NOTE: ANNULAR SPACE AROUND DUCT IS TO BE SEALED AT ALL PENETRATIONS OF FLOORS AND CEILINGS WITH U.L. LISTED FIRE STOPPING SYSTEM.
3. PROVIDE WALL MOUNTED THERMOSTAT FOR EACH PTAC IN APARTMENTS. COORDINATE FINAL LOCATION WITH OWNER.

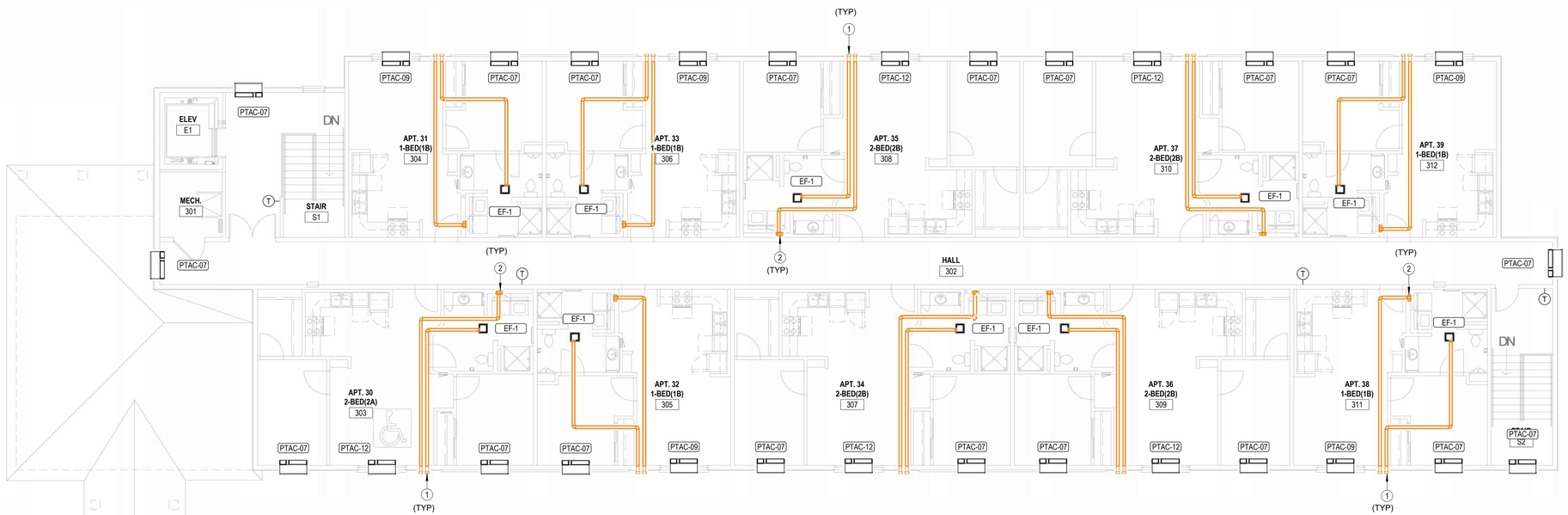

2 M1.2 THIRD FLOOR HVAC PLAN
1/8" = 1'-0"

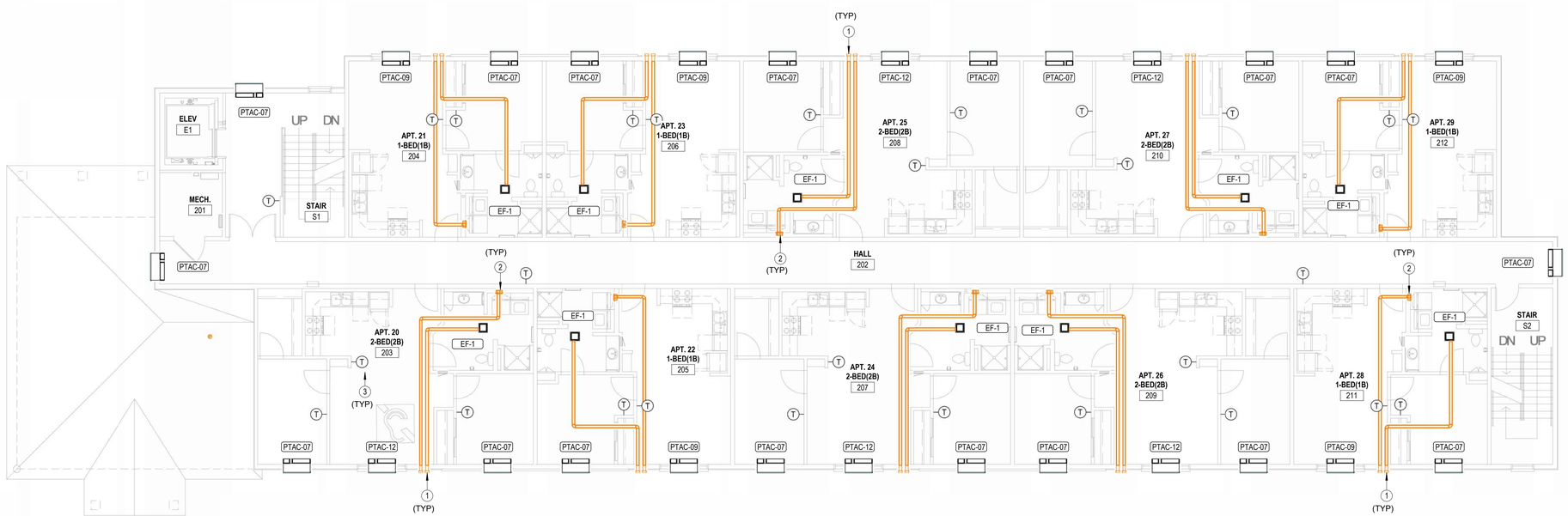

1 M1.2 SECOND FLOOR HVAC PLAN
1/8" = 1'-0"

JonesGillamRenz
730 N. Ninth
Salina, KS 67401
785.827.0386
1881 Main Street, Suite 301
Kansas City, MO 64108
jgr@jgrarchitects.com

RESIDENCE AT GREEN MEADOW

NEW SENIOR LIVING FACILITY

SAN ANGELO, TEXAS

STATE OF TEXAS
TIMOTHY C. TREDWAY
95252
LICENSED PROFESSIONAL ENGINEER
11-15-2024

REVISIONS:

DATE: 11/15/2024
JOB: 24-3395
SHEET NO.:

M1.2

COPYRIGHTED ©

LST Consulting Engineers, PA
MANHATTAN
4809 Vue Du Lac Place, Suite 201
Manhattan, KS 66503
785.587.8042
WICHITA
125 S. Washington, Suite 150
Wichita, KS 67202
316.285.0696
www.LSTengineers.com
mail@LSTengineers.com

Project 24034 **11/15/2024**

Packaged Terminal Air Conditioner Schedule

Mark	Manufacturer	Model Number	Cooling		Heating	Airflow	Electrical				Weight
			Total Cooling	Sensible Cooling	Electric Heat Output		MCA	MOCP	Voltage	Phase	
PTAC-07	GE	AZ45E07DAP	6,900 Btu/h	4,210 Btu/h	1.96 kW	350 CFM	11.8 A	15.0 A	208 V	1	108 lb
PTAC-09	GE	AZ45E09DAP	9,400 Btu/h	5,450 Btu/h	1.96 kW	370 CFM	11.8 A	15.0 A	208 V	1	106 lb
PTAC-12	GE	AZ45E12DAP	11,200 Btu/h	6,050 Btu/h	1.96 kW	360 CFM	11.8 A	15.0 A	208 V	1	104 lb

NOTES:
1. Provide with manufacturer's line cord connection kit.
2. Provide with wall case compatible with wall construction coordinate with G.C.
3. Provide with remote wall mounted programmable thermostat with two speed fan control.
4. Provide with manufacturer's sub-base accessory. Provide all components necessary for complete instalation.

Heat Pump Schedule

Identity	Manufacturer	Model	Nominal Capacity	Cooling Capacity						Heating Capacity				Electrical			
				EDB	EDB	EWB	Net Sensible Capacity	Rated Cooling Capacity	SEER2 Rating	OA EDB	EDB	Rated Heating Capacity	HSPF2 Rating	Phase	MCA	MOCP	Voltage
HP-1	Trane	4TWR4024	2.0 ton	105 °F	78 °F	67 °F	15,700 Btu/h	22,200 Btu/h	14.6	47 °F	70 °F	22,800 Btu/h	7.8	1	15.0 A	25.0 A	208 V

NOTES:
1. Refrigerant lines shall be field fabricated. Coordinate line sizing requirements with equipment manufacturer for length.
2. Provide 7-day programmable thermostat.
3. Provide 7-day programable thermostat. Provide with R410a refrigerant.
4. Provide 2 sets of MERV-7 filters.

Blower Coil Schedule

Identity	Manufacturer	Model	Fan			Heating	Electrical		MCA	MOCP
			Airflow	ESP	Speed		Voltage	Phase		
BC-1	Trane	TEM6A0B24	800 CFM	0.50 in-wg	Medium	3.6 kW	208 V	1	25.0 A	25.0 A

NOTES:
1. Single point connection required, coordinate the exact electrical requirements of equipment provided wih E.C.
2. Electrical heater shall not operate simultaneously with heat pump. Electric heater shall be used as back-up heat only.
3. Povide unit with condensate overflow switch.

Grilles, Registers & Diffusers Schedule

ID Type	Manufacturer	Model	Application				Mounting	Include Damper	Product Specification	Notes
			Supply	Return	Exhaust	Transfer				
RG	Price	530		■			Surface Mount	No	Steel louvered return grille	
SD	Price	520	■				Surface Mount	No	Steel double deflection supply grille with front blades paralle to long dimension	

NOTES:
• Maximum noise criteria shall be 25.
• Runouts to diffusers shall be same size as neck, U.N.O.
• Paint objects visible through grilles with flat black paint.
• Provide mounting frame as required for ceiling type. Coordinate with Architect.
• Verify finish with Architect.
• Provide devices with radiation dampers as required in rated ceilings. Coordinate with Architect.

Electric Cabinet Heater Schedule

Mark	Manufacturer	Model	Mounting	Watts	Voltage	Phase	Description	Notes
EWH	Trane	UHWA	Wall	3.0 kW	208 V	1	Architectural fan forced wall heater	1,2,3

NOTES:
1. Provide with high temperature themral cutout and fan delay.
2. Provide wit integral thermostat and unit mounted disconnect switch.
3. Provide with manufacturer's surface mounting adapter sleeve. Coordinate exact mounting requirements and locations with Architect and rated construction.

Exhaust Fan Schedule

Mark	Manufacturer	Model	CFM	ESP	Power	Electrical		Notes
						Voltage	Phase	
EF-1	Panasonic	FV-0810VSS1	50 CFM	0.45 in-wg	21 W	120 V	1	1,2,3,4,5,6
EF-2	Panasonic	FV-0511VK2	110 CFM	0.45 in-wg	21 W	120 V	1	1,2,3,4,5,6,7

NOTES:
1. Fixture shall be Energy Star listed.
2. Fixture shall operate at < 1 SONE.
3. Provide with ec motor with integral disconnect.
4. Provide manufacturer's wall cap or roof jack, see plans.
5. Provide integral backdraft damper.
6. Provide with manufacturer's ceiling radiation damper. Omit radiation dampers where rated ceilings are not present, coordinate with Architect.
7. Provide Panasnic FV-VS15VK1 multi-spped with time delay module set to provide cfm as listed on drawings continuously wth a max of 110 cfm for 15 min (adj_ when wall switch is tunred on.

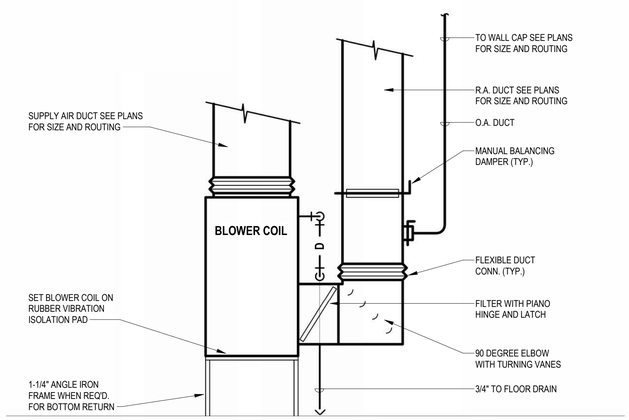

1 / M6.1 BLOWER COIL DETAIL
NOT TO SCALE

JonesGillamRenz
730 N. Ninth
Salina, KS 67401
785.827.0386
1881 Main Street, Suite 301
Kansas City, MO 64108
jgr@jgrarchitects.com

RESIDENCE AT GREEN MEADOW
NEW SENIOR LIVING FACILITY
SAN ANGELO, TEXAS

STATE OF TEXAS
TIMOTHY C. TREDWAY
95252
LICENSED PROFESSIONAL ENGINEER
11-15-2024

REVISIONS:

DATE: 11/15/2024
JOB: 24-3395
SHEET NO.:
M6.1

COPYRIGHTED ©

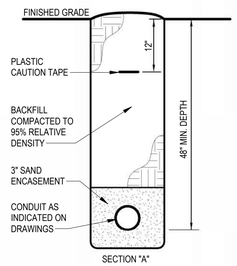

3 ME1.1 CONDUIT TRENCH SECTION A
NOT TO SCALE

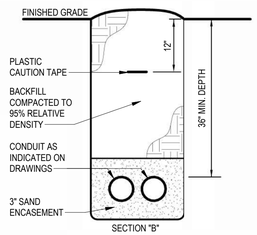

4 ME1.1 CONDUIT TRENCH SECTION B
NOT TO SCALE

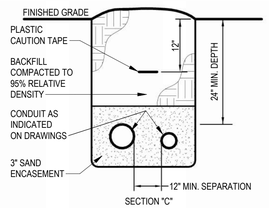

5 ME1.1 CONDUIT TRENCH SECTION C
NOT TO SCALE

GENERAL SITE POWER NOTES

A. CONTRACTOR SHALL BE RESPONSIBLE FOR ALL CONDUIT AND ASSOCIATED TRENCHING AND BACKFILL REQUIRED FOR UNDERGROUND ELECTRICAL UTILITY PRIMARY CABLE. POWER COMPANY SHALL FURNISH, INSTALL, AND TERMINATE ALL CONDUCTORS.

B. CONTRACTOR SHALL BE RESPONSIBLE FOR ALL CONDUIT AND ASSOCIATED TRENCHING AND BACKFILL REQUIRED FOR UNDERGROUND ELECTRICAL SERVICELATERALS FROM UTILITY TRANSFORMERS TO SERVICE EQUIPMENT AT BUILDINGEXTERIORS. POWER COMPANY SHALL FURNISH, INSTALL, AND TERMINATE ALLCONDUCTORS.

C. ALL CONDUIT BELOW GRADE SHALL BE SCHEDULE 40 PVC. ALL CONDUIT ABOVEGRADE SHALL BE SCHEDULE 80 PVC.

D. ALL CONDUIT TRENCHES MUST BE INSPECTED BY AEP BEFORE BACKFILLING.

NOTES BY SYMBOL

1. POWER COMPANY PAD MOUNT TRANSFORMER. PROVIDE CONCRETE PAD PER AEP TEXAS SERVICE STANDARDS. COORDINATE EXACT LOCATION AND REQUIREMENTS WITH AEP TEXAS PRIOR TO STARTING WORK.
2. 4" PVC CONDUIT FOR POWER COMPANY PROVIDED PRIMARY CABLING. COORDINATE ROUTING WITH AEP TEXAS.
3. ELECTRIC SERVICE EQUIPMENT, SEE RISER DIAGRAM ON SHEET E6.2.
4. PROVIDE (2) 3" CONDUITS FOR COMMUNICATIONS SERVICES. PROVIDE PULL STRING IN EACH RACEWAY. VERIFY TERMINATION POINTS AT PROPERTY LINE WITH LOCAL COMMUNICATIONS SERVICE PROVIDERS.
5. SANITARY SEWER, SEE CIVIL DRAWINGS FOR CONTINUATION.
6. DOMESTIC WATER SERVICE, SEE CIVIL DRAWINGS FOR CONTINUATION.
7. FIRE SUPPRESSION SERVICE, SEE CIVIL DRAWINGS FOR CONTINUATION.

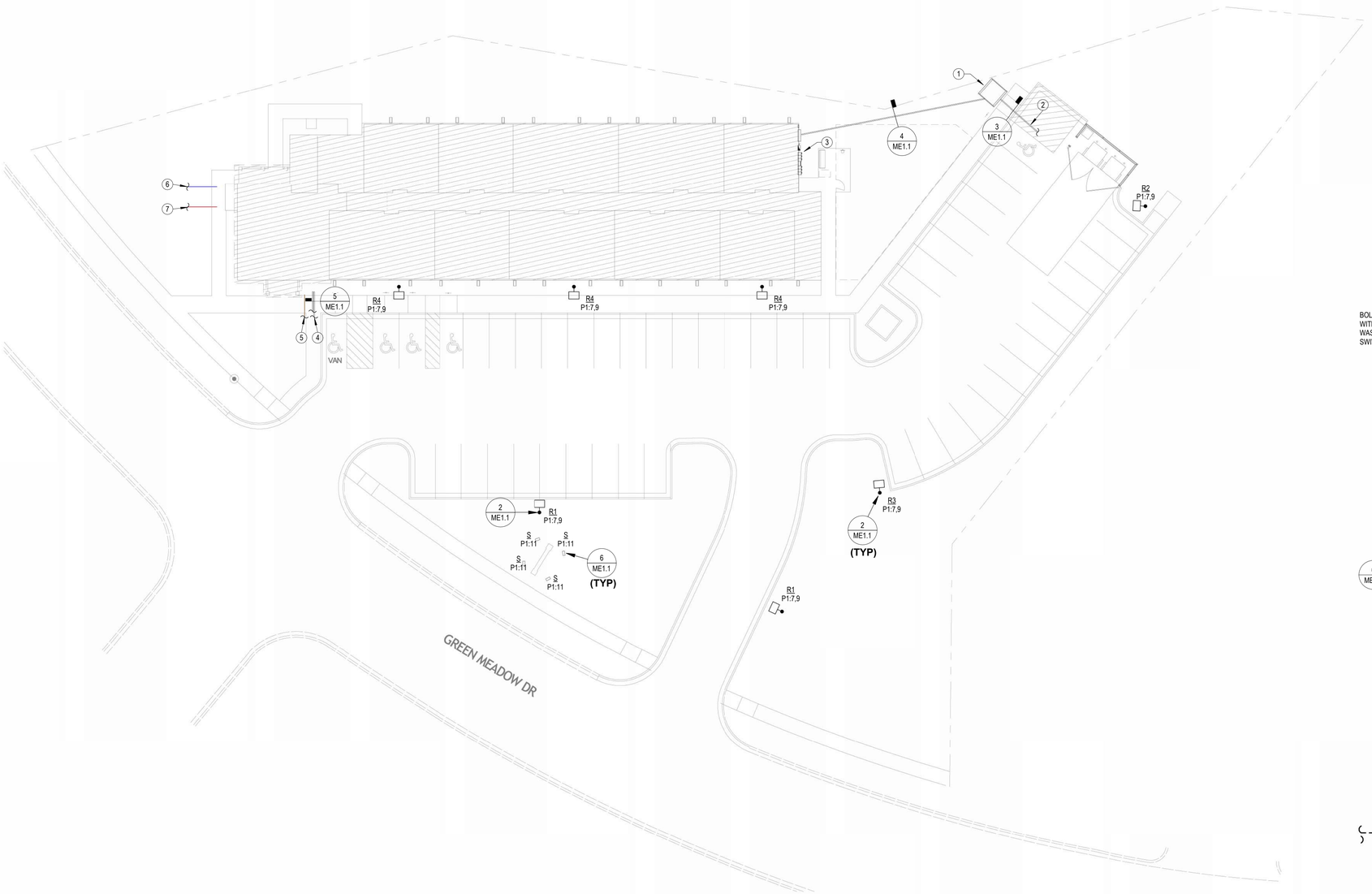

1 ME1.1 M/E SITE PLAN
1" = 20'-0"

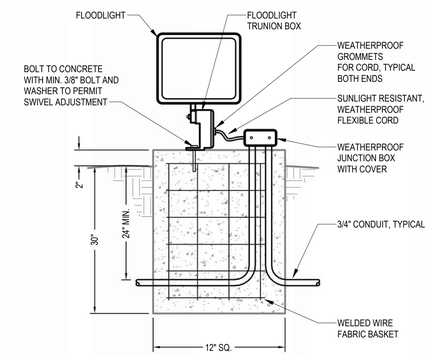

6 ME1.1 GROUND LIGHT DETAIL
NOT TO SCALE

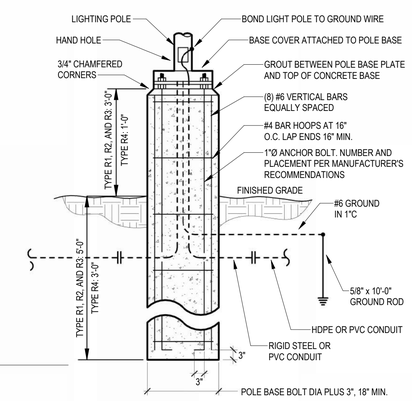

2 ME1.1 LIGHT POLE BASE DETAIL
NOT TO SCALE

LST Consulting Engineers, PA
MANHATTAN
4809 Vue Du Lac Place, Suite 201
Manhattan, KS 66503
785.587.8042
WICHITA
125 S. Washington, Suite 150
Wichita, KS 67202
316.285.0696
www.LSTengineers.com
mail@LSTengineers.com

Project 24034 11/15/2024

JonesGillamRenz
730 N. Ninth
Salina, KS 67401
785.827.0386
1881 Main Street, Suite 301
Kansas City, MO 64108
jgr@jgrarchitects.com

RESIDENCE AT GREEN MEADOW
NEW SENIOR LIVING FACILITY
SAN ANGELO, TEXAS

STATE OF TEXAS
TIMOTHY C. TREDWAY
95252
LICENSED PROFESSIONAL ENGINEER
11-15-2024

REVISIONS:

DATE: 11/15/2024
JOB: 24-3395
SHEET NO.:

ME1.1

COPYRIGHTED ©

LST Consulting Engineers, PA
MANHATTAN
4809 Vue Du Lac Place, Suite 201
Manhattan, KS 66503
785.587.8042
WICHITA
125 S. Washington, Suite 150
Wichita, KS 67202
316.285.0696
www.LSTengineers.com
mail@LSTengineers.com

Project 24034 **11/15/2024**

General Plan Symbols

- Plan Revision Number
- Detail Number on Sheet
- Sheet Number Where Detail is Placed
- Keynote Symbol
- Continuation Symbol
- Point Where New Connects To Existing
- Room 1 — Room Name / Number
- Area Being Demolished
- Area Not In Contract

Abbreviations

Ø	ROUND	LVR	LOUVER
ABV	ABOVE	LWT	LEAVING WATER TEMPERATURE
AC	AIR CONDITIONING	M/A	MIXED AIR
AD	AREA DRAIN	MAX	MAXIMUM
ADD	ADDENDUM	MBH	ONE THOUSAND BTU PER HOUR
AFF	ABOVE FINISHED FLOOR	MCF	ONE THOUSAND CUBIC FEET
AFUE	ANNUAL FUEL UTILIZATION EFFICIENCY	MD	MOTORIZED DAMPER
ALT	ALTERNATE	MECH	MECHANICAL
AP	ACCESS PANEL	MFR	MANUFACTURER
ARCH	ARCHITECT/ARCHITECTURAL	MIN	MINIMUM
BFF	BELOW FINISHED FLOOR	MISC	MISCELLANEOUS
BLW	BELOW	MTR	MOTOR
BTU	BRITISH THERMAL UNITS	MU/A	MAKE-UP/AIR
BTUH	BRITISH THERMAL UNITS PER HOUR	NC	NOISE CRITERIA
CAP	CAPACITY	NC	NORMALLY CLOSED
CB	CATCH BASIN	NIC	NOT IN CONTRACT
CFM	CUBIC FEET PER MINUTE	NO	NUMBER
CLG	CEILING	NO	NORMALLY OPEN
CO	CLEAN OUT	NTS	NOT TO SCALE
CW	COLD WATER	O	OXYGEN
D	DEGREE	O/A	OUTSIDE AIR
DB	DRY BULB	ORD	OVERFLOW ROOF DRAIN
DIA	DIAMETER	PD	PRESSURE DROP
DN	DOWN	PIV	POST INDICATOR VALVE
DW	DISTILLED WATER	PLBG	PLUMBING
EA	EACH	PRESS	PRESSURE
EAT	ENTERING AIR TEMPERATURE	PRV	PRESSURE REDUCING VALVE
ELEC	ELECTRICAL	PSI	POUNDS PER SQUARE INCH
EQUIP	EQUIPMENT	PSIG	POUNDS PER SQUARE INCH GAUGE
EWC	ELECTRIC WATER COOLER	PWR	POWER
EWT	ENTERING WATER TEMPERATURE	R	DUCT RISER
E/A	EXHAUST AIR	R/A	RETURN AIR
EXIST	EXISTING	RCP	RADIANT CEILING PANEL
F	DEGREES FAHRENHEIT	RD	ROOF DRAIN
FCO	FLOOR CLEAN OUT	REC	RECESSED
FD	FLOOR DRAIN	RED	REDUCER
FDC	FIRE DEPARTMENT CONNECTION	RH	RELATIVE HUMIDITY
FL	FLOOR	RL/A	RELIEF AIR
FO	FUEL OIL	RM	ROOM
FOV	FUEL OIL VENT	RPM	REVOLUTIONS PER MINUTE
FOR	FUEL OIL RETURN	RW	RAIN WATER
FOS	FUEL OIL SUPPLY	SF	SQUARE FOOT
FPM	FEET PER MINUTE	S/A	SUPPLY AIR
FS	FLOOR SINK	SAN	SANITARY
FT	FOOT/FEET	SF	SQUARE FOOT
FTR	FIN TUBE RADIATION	SD	SMOKE DAMPER
GAL	GALLON	SM	SURFACE MOUNT
GF	GAS-FIRED	SP	STANDPIPE
GC	GENERAL CONTRACTOR	SP	STATIC PRESSURE
GPM	GALLONS PER MINUTE	STM	STEAM
GW	GREASE WASTE	T	THERMOSTAT
HB	HOSE BIB	TD	TEMPERATURE DROP
HP	HORSE POWER	TDR	TRENCH DRAIN
HTG	HEATING	TEMP	TEMPERATURE
HTR	HEATER	TYP	TYPICAL
HW	HOT WATER	UG	UNDERGROUND
HYD	HYDRANT	VAC	VACUUM
ID	INDIRECT	V	VENT
IN	INCH	VAV	VARIABLE AIR VOLUME
INV	INVERT	VENT	VENTILATION
LB	POUND	VTR	VENT THROUGH ROOF
LB/HR	POUNDS PER HOUR	W	WASTE
LAT	LEAVING AIR TEMPERATURE	WB	WET BULB
LP	LOW PRESSURE	WCO	WALL CLEAN OUT
LPG	LIQUEFIED PETROLEUM GAS	WH	WALL HYDRANT

Equipment Abbreviations

AC	AIR CONDITIONING UNIT	ET	EXPANSION TANK
ACCU	AIR COOLING CONDENSING UNIT	EWH	ELECTRIC WATER HEATER
AHU	AIR HANDLING UNIT	FCU	FAN COIL UNIT
AS	AIR SEPARATOR	FP	FIRE PUMP
B	BOILER	GI	GREASE INTERCEPTOR
CH	CHILLER	GRV	GRAVITY ROOF VENTILATOR
CT	COOLING TOWER	HWP	HEATING WATER PUMP
CUH	CABINET UNIT HEATER	HRU	HEAT RECOVERY UNIT
CHWP	CHILLED WATER PUMP	PRV	POWER ROOF VENTILATOR
DBP	DOMESTIC WATER BOOSTER PUMP	RE	RETURN/EXHAUST FAN
DC	DUCT MOUNTED COIL	RTU	ROOFTOP UNIT
DCP	DOMESTIC WATER CIRCULATING PUMP	SP	SUMP PUMP
EF	EXHAUST FAN	UH	UNIT HEATER
EDC	ELECTRIC DUCT COIL	WH	WATER HEATER

* NOTE *
ALL OF GENERAL NOTES ON THIS SHEET ARE TO BE APPLIED TO ALL OTHER DRAWINGS IN THIS SET.THE SYMBOLS AND ABBREVIATIONS SHOWN ON THIS SHEET MAY OR MAY NOT BE USED IN THIS SET OF DRAWINGS.

Plumbing Symbols

- 2" — Nominal Pipe Size
- Above Ground Piping
- Below Ground Piping
- 1/8" / 12" SLOPE — Pipe Slope (When Applicable)
- (E) — Existing Pipe To Remain
- Pipe To Be Demolished
- CW — Domestic Cold-Water
- NPW — Non-Potable Water
- S-CW — Soft Cold-Water
- F-CW — Filtered Cold-Water
- RO — Reverse Osmosis Water
- HW — Domestic Hot-Water
- HW 140° — Domestic Hot-Water 140°
- HW-R — Hot-Water Recirculation
- HW-R 140° — Hot-Water Recirculation 140°
- SS — Sanitary Drain
- V — Sanitary Vent
- WV — Sanitary Wet Vent
- CWV — Combination DWV
- CD — Condensate Drain
- ID — Indirect Drain
- GW — Grease Waste
- GV — Grease Vent
- PD — Pump Discharge
- SD — Storm Drain
- OSD — Storm Overflow
- CA — Compressed Air
- G — Natural Gas
- LP — Liquid Propane
- Pipe Rise / Drop

Pipe Accessory Notes

- 4" FCO — Cleanout
- 2" CHECK — Check Valve
- 2" BALANCE — Balancing Valve
- 2" CIRC — Circuit Setter
- 2" GATE — Gate Valve
- 2" S/O — Ball Valve
- 2" STRAIN — Fluid Strainer
- S — 1" GAS-CNTRL — Emergency Gas Shutoff
- 1" PLUG — Plug Valve
- 1" GAS COCK — Gas Shutoff Cock
- P — 1" REG — Gas Regulator
- T/P — 1" T/V — Thermostatic Valve
- T/P — TMV-XT/P — Mixing Valve
- EM — TMVEM — Emergency Mixer
- P — 2" PRV — Pressure Reducing Valve
- W — 2" METER — Water Meter
- Double Check Valve
- Reduced Pressure Zone

Plumbing Fixture Notes

- Floor Drain — 0" FD — Design Size; Identity Type; 2 DFU — Drainage Fixture Units
- 2" FD-3 — Floor Drain w/ Deep Seal Trap
- 2" FD-3P — Floor Drain w/ Trap Primer "P" Indicates Primer Connection
- 2" FD-7 — Floor Drain w/ Integral Cleanout
- 3" AD-1 — Area Drain (No Trap)
- 6" DD-1 — Deck Drain
- 3" HD-1 — Hub Drain (Funnel Type)
- 3" FS — Floor Sink
- 8" SD-12 — Roof Drain
- 6" SD-1 — Combination Drain; 2000 SF — Rainfall Surface Area

Plumbing Sheet Index

P0.1	PLUMBING TITLE SHEET
P1.1	DWV 1ST AND UNDER PLANS
P1.2	DWV 2ND AND 3RD PLANS
P1.3	DOMESTIC WATER PLANS
P1.4	DOMESTIC WATER PLANS
P4.1	ENLARGED DOMESTIC WATER PLANS
P6.1	PLUMBING SCHEDULES
P9.1	PLUMBING RISERS
P9.2	PLUMBING RISERS
P9.3	PLUMBING RISERS

GENERAL PLUMBING NOTES

A. FIELD VERIFY ALL NEW WATER, WASTE, AND VENT PIPING CONNECTIONS AND PROVIDE NEW CONNECTIONS AS REQUIRED FOR PROPERLY OPERATING SYSTEMS.
B. PITCH UNDERFLOOR SANITARY WASTE PIPING OVER 2" AT 1/8" PER FOOT, 2" AND SMALLER AT 1/4" PER FOOT.
C. FIELD VERIFY LOCATION AND INVERTS OF SITE UTILITIES PRIOR TO INSTALLATION.
D. ROUTE DOMESTIC WATER, AND SANITARY SEWER SERVICES TO SITE UTILITIES 5'-0" FROM BUILDING UNLESS NOTED OTHERWISE. REFER TO CIVIL PLANS.
E. WASTE AND VENT PIPING BELOW FLOOR AND THROUGH FLOOR SHALL BE 2" MINIMUM.
F. LOCATIONS OF PIPING AND EQUIPMENT AS INDICATED ON THE DRAWINGS ARE APPROXIMATE AND SUBJECT TO MINOR ADJUSTMENTS IN THE FIELD. WORK SHALL BE COORDINATED WITH ALL OTHER TRADES TO AVOID INTERFERENCE IN THE FIELD.
G. FINAL PRODUCT SHALL BE A COMPLETE AND FUNCTIONING SYSTEM, AND SHALL CONFORM TO ALL REQUIREMENTS OF APPLICABLE FEDERAL, STATE, AND LOCAL CODES, INCLUDING BUT NOT LIMITED TO THE INTERNATIONAL (OR UNIFORM, DEPENDING ON JURISDICTION) PLUMBING CODE AND INTERNATIONAL MECHANICAL CODE.
H. LOCATE EQUIPMENT REQUIRING ACCESS 2'-0" MAXIMUM ABOVE CEILING.
I. LOCATE PIPING AND EQUIPMENT OUTSIDE OF THE NEC REQUIRED CLEAR SPACE ABOVE AND AROUND ELECTRICAL PANELS, TRANSFORMERS AND OTHER ELECTRICAL EQUIPMENT. COORDINATE WITH ELECTRICAL CONTRACTOR.
J. PENETRATIONS OF RATED ASSEMBLIES SHALL BE FIRE STOPPED. FIRE STOPPING SHALL BE U.L. LISTED. SEE ARCHITECTURAL DRAWINGS FOR LOCATIONS OF RATED ASSEMBLIES.
K. PROVIDE SLEEVES AND/OR OPENINGS TO RUN PIPES THROUGH FOUNDATIONS, FLOORS, WALLS, AND ROOF.
L. MAINTAIN CLEAR ACCESS TO SERVICE EQUIPMENT AND OTHER ACCESSORIES REQUIRING SERVICE, VISUAL INSPECTION OR HAND OPERATION. WHERE INDICATED OR REQUIRED, PROVIDE ACCESS PANELS OF THE TYPE SELECTED TO SUIT MATERIALS IN WHICH INSTALLED.
M. TRANSITION FROM PIPING SIZES SHOWN TO PROPERLY CONNECT TO EQUIPMENT.
N. PIPE SIZES SHOWN SHALL BE CONTINUED IN THE DIRECTION OF FLOW UNTIL ANOTHER SIZE IS SHOWN.
O. INSTALL ALL EQUIPMENT IN ACCORDANCE WITH THE RESPECTIVE MANUFACTURER'S WRITTEN INSTALLATION INSTRUCTIONS, AT A LEVEL OF QUALITY AND WORKMANSHIP CONSISTENT WITH THE SPECIFICATIONS.
P. INSTALL EXPOSED PIPING AS HIGH AS PRACTICAL IN ROOMS WITHOUT CEILINGS.
Q. PRIOR TO STARTING WORK, SUBMIT SHOP DRAWINGS FOR ALL PLUMBING EQUIPMENT AND MATERIALS. SUBSTITUTE EQUIPMENT AND MATERIALS INSTALLED WITHOUT PRIOR APPROVAL SHALL BE SUBJECT TO REPLACEMENT AT CONTRACTOR'S EXPENSE.
R. CONTRACTOR SHALL OBTAIN AND PAY FOR ALL NECESSARY PERMITS AND SHALL ARRANGE FOR ALL INSPECTIONS AS REQUIRED.
S. PROVIDE ONE YEAR WARRANTY FOR ALL WORKMANSHIP AND MATERIALS AFTER THE DATE OF FINAL ACCEPTANCE.

JGR
JonesGillamRenz
730 N. Ninth
Salina, KS 67401
785.827.0386
1881 Main Street, Suite 301
Kansas City, MO 64108
jgr@jgrarchitects.com

RESIDENCE AT GREEN MEADOW
NEW SENIOR LIVING FACILITY
SAN ANGELO, TEXAS

STATE OF TEXAS
TIMOTHY C. TREDWAY
95252
LICENSED PROFESSIONAL ENGINEER
11-15-2024

REVISIONS:

DATE: 11/15/2024
JOB: 24-3395
SHEET NO.:

P0.1

COPYRIGHTED ©

LST Consulting Engineers, PA
MANHATTAN
4809 Vue Du Lac Place, Suite 201
Manhattan, KS 66503
785.587.8042
WICHITA
125 S. Washington, Suite 150
Wichita, KS 67202
316.285.0696
www.LSTengineers.com
mail@LSTengineers.com

Project 24034 **11/15/2024**

PLUMBING SIZING SYMBOLS	
X"	DRAIN (X = SIZE)
X"	VENT (X = SIZE)
X"	WASTE STACK VENT (X = SIZE)

NOTES BY SYMBOL

1. CONNECT 3/4" CONDENSATE DRAIN FROM EACH PTAC TO COMMON 1" CONDENSATE PIPE. ROUTE 1" CONDENSATE PIPE CONCEALED IN WALL AND TERMINATE WITH ELBOW DOWN AT 12" A.F.G., ABOVE SPLASH BLOCK. COORDINATE WITH G.C.
2. CONNECT 3/4" CONDENSATE DRAIN FROM EACH PTAC TO COMMON 1" CONDENSATE PIPE. ROUTE 1" CONDENSATE PIPE CONCEALED IN WALL AND TERMINATE WITH ELBOW DOWN AT 12" A.F.G. WHERE PTAC IS LOCATED ADJACENT TO EXTERIOR CONCRETE PAVING, SPILL CONDENSATE TO 2" OPEN HUB DRAIN, ROUTE 2" PVC PIPE BELOW GRADE TO DAYLIGHT. COORDINATE WITH CIVIL ENGINEER AND G.C.
3. 4" PVC PIPE FOR RADON SYSTEM. COORDINATE EXACT REQUIREMENTS WITH ARCHITECT.
4. PROVIDE INDIRECT CONNECTION AT GARBAGE DISPOSER AND CONNECT DISHWASHER. ROUTE DRAIN FROM DISHWASHER AT BACK OF CABINETRY. COORDINATE EXACT ROUTING WITH G.C.
5. ELEVATOR PIT SUMP PUMP, SEE 2.P6.1 FOR MORE INFORMATION.
6. ROUTE 2" DISCHARGE FROM SUMP PUMP BELOW GRADE TO DAYLIGHT. COORDINATE WITH G.C.
7. ROUTE CONDENSATE DRAIN LINE DOWN TIGHT TO WALL INSIDE MECHANICAL ROOM. ROUTE TO NEAREST FLOOR DRAIN AND TERMINATE WITH ELBOW DOWN.

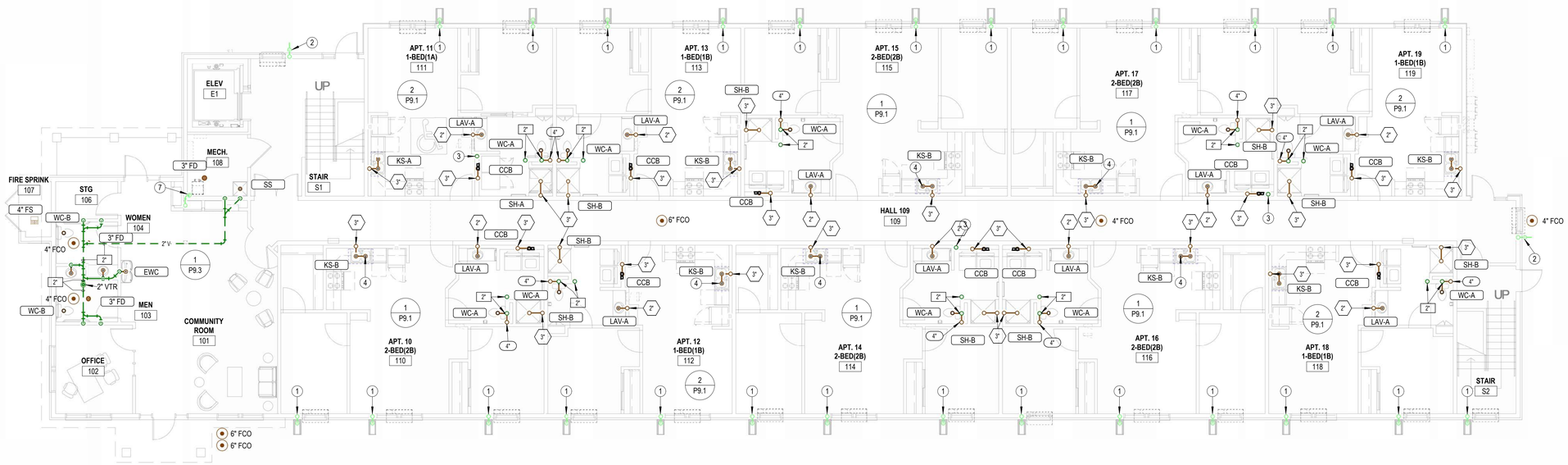

2 P1.1 FIRST FLOOR WASTE AND VENT PLAN
1/8" = 1'-0"

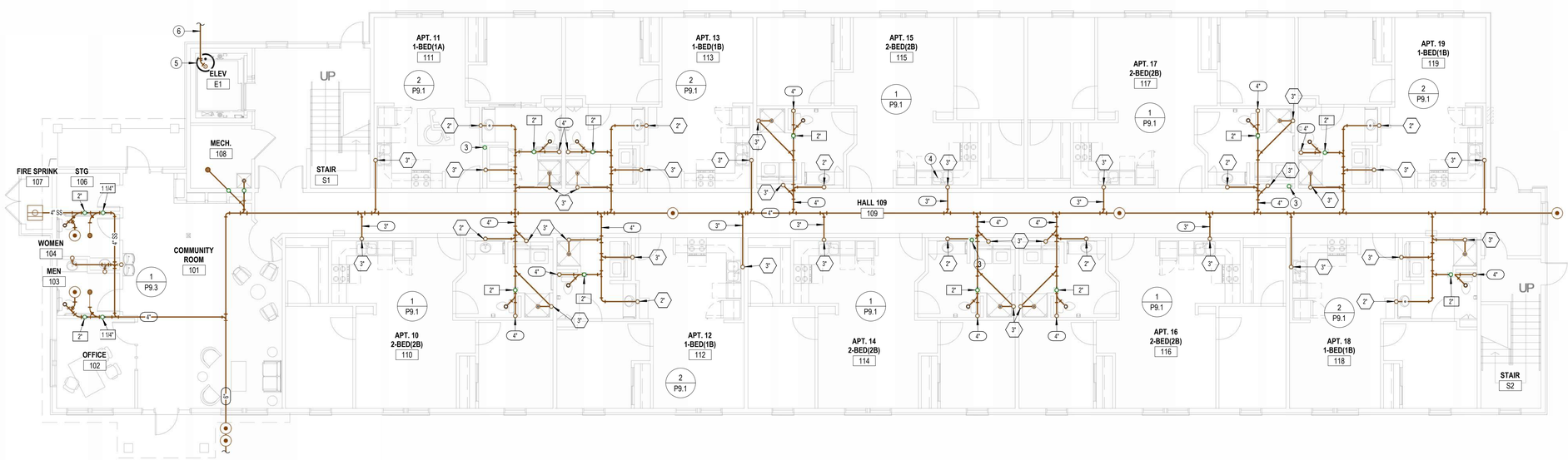

1 P1.1 UNDERFLOOR WASTE AND VENT PLAN
1/8" = 1'-0"

JonesGillamRenz
730 N. Ninth
Salina, KS 67401
785.827.0386
1881 Main Street, Suite 301
Kansas City, MO 64108
jgr@jgrarchitects.com

RESIDENCE AT GREEN MEADOW

NEW SENIOR LIVING FACILITY

SAN ANGELO, TEXAS

STATE OF TEXAS
TIMOTHY C. TREDWAY
95252
LICENSED
PROFESSIONAL ENGINEER
11-15-2024

REVISIONS:

DATE: 11/15/2024
JOB: 24-3395
SHEET NO.:

P1.1

COPYRIGHTED ©

LST Consulting Engineers, PA
MANHATTAN
4809 Vue Du Lac Place, Suite 201
Manhattan, KS 66503
785.587.8042
WICHITA
125 S. Washington, Suite 150
Wichita, KS 67202
316.285.0696
www.LSTengineers.com
mail@LSTengineers.com

Project 24034 **11/15/2024**

PLUMBING SIZING SYMBOLS	
X"	DRAIN (X = SIZE)
X"	VENT (X = SIZE)
X"	WASTE STACK VENT (X = SIZE)

NOTES BY SYMBOL

1. CONNECT 3/4" CONDENSATE DRAIN FROM EACH PTAC TO COMMON 1" CONDENSATE PIPE. ROUTE 1" CONDENSATE PIPE CONCEALED IN WALL AND TERMINATE WITH ELBOW DOWN AT 12" A.F.G., ABOVE SPLASH BLOCK. COORDINATE WITH G.C.
2. CONNECT 3/4" CONDENSATE DRAIN FROM EACH PTAC TO COMMON 1" CONDENSATE PIPE. ROUTE 1" CONDENSATE PIPE CONCEALED IN WALL AND TERMINATE WITH ELBOW DOWN AT 12" A.F.G. WHERE PTAC IS LOCATED ADJACENT TO EXTERIOR CONCRETE PAVING, SPILL CONDENSATE TO 2" OPEN HUB DRAIN. ROUTE 2" PVC PIPE BELOW GRADE TO DAYLIGHT. COORDINATE WITH CIVIL ENGINEER AND G.C.
3. 4" PVC PIPE FOR RADON SYSTEM. COORDINATE EXACT REQUIREMENTS WITH ARCHITECT.
4. PROVIDE INDIRECT CONNECTION AT GARBAGE DISPOSER AND CONNECT DISHWASHER. ROUTE DRAIN FROM DISHWASHER AT BACK OF CABINETRY. COORDINATE EXACT ROUTING WITH G.C.
5. CONNECT 3/4" CONDENSATE DRAIN GROM PTAC AND ROUTE DOWN TO FLOOR DRAIN IN FIRST FLOOR MECHANICAL ROOM.

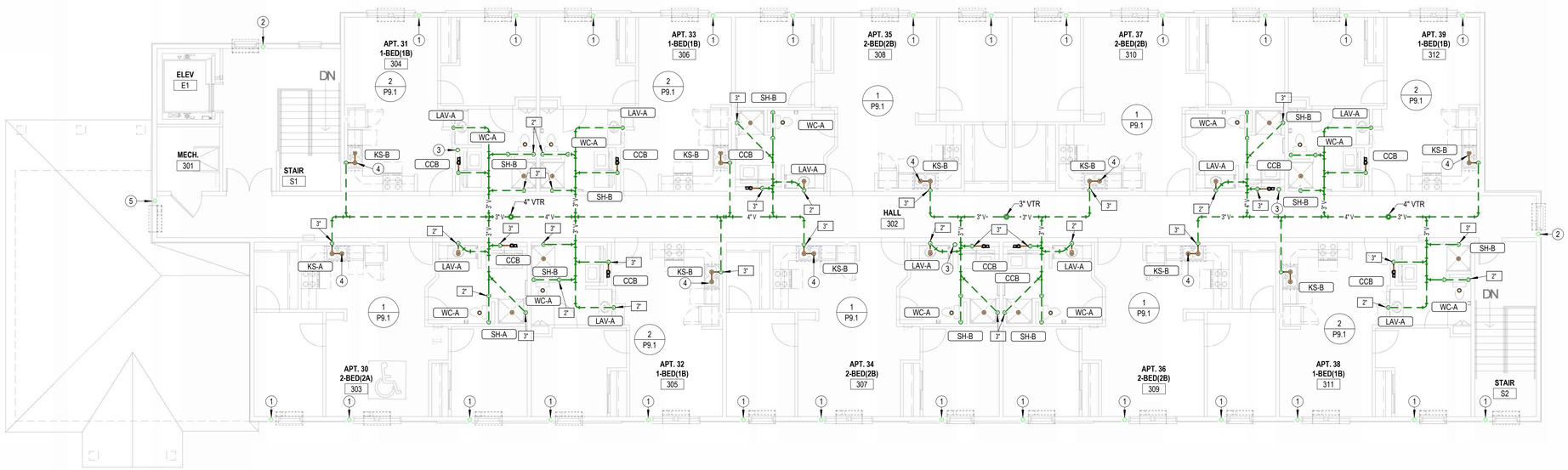

2 / P1.2 THIRD FLOOR WASTE AND VENT PLAN
1/8" = 1'-0"

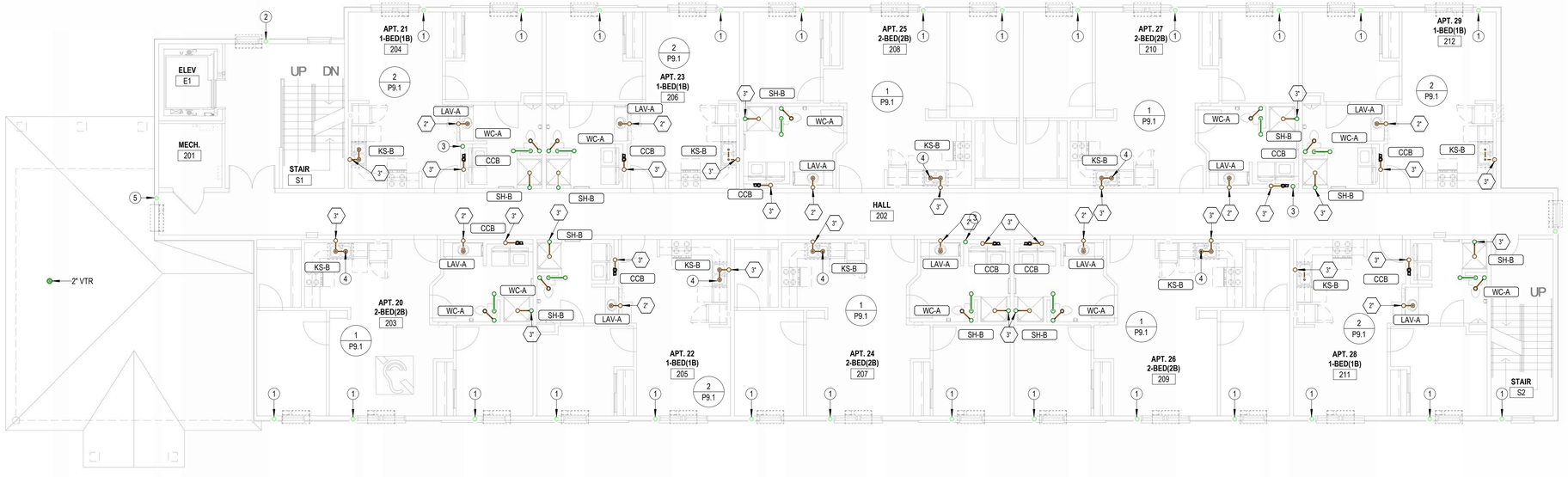

1 / P1.2 SECOND FLOOR WASTE AND VENT PLAN
1/8" = 1'-0"

JonesGillamRenz
730 N. Ninth
Salina, KS 67401
785.827.0386
1881 Main Street, Suite 301
Kansas City, MO 64108
jgr@jgrarchitects.com

RESIDENCE AT GREEN MEADOW
NEW SENIOR LIVING FACILITY
SAN ANGELO, TEXAS

STATE OF TEXAS
TIMOTHY C. TREDWAY
95252
LICENSED
PROFESSIONAL ENGINEER
11-15-2024

REVISIONS:

DATE: 11/15/2024
JOB: 24-3395
SHEET NO.:
P1.2

COPYRIGHTED ©

LST Consulting Engineers, PA
MANHATTAN
4809 Vue Du Lac Place, Suite 201
Manhattan, KS 66503
785.587.8042
WICHITA
125 S. Washington, Suite 150
Wichita, KS 67202
316.285.0696
www.LSTengineers.com
mail@LSTengineers.com

Project 24034 **11/15/2024**

NOTES BY SYMBOL

1. ELECTRICAL EQUIPMENT SHOWN FOR COORDINATION. DO NOT ROUTE PIPING ABOVE OR BELOW EQUIPMENT, AND MAINTAIN WORKING CLEARANCE SHOWN.
2. FIRE PROTECTION SERVICE ENTRANCE. INSTALL IN ACCORDANCE WITH NFPA 13. COORDINATE LOCATION OF ALL VALVES AND APPURTENANCES WITH AHJ. SEE 1:P6.1 FOR MORE INFORMATION.
3. PROVIDE SHUT-OFF VALVE AT WATER SERVICE ENTRANCE WITH PRESSURE REDUCING VALVE SET TO 80 PSI IF REQUIRED. COORDINATE REQUIREMENTS WITH CITY OF SAN ANGELO.
4. HOT WATER RECIRC LOOP SHALL DROP IN WALL TO LIMIT HOT WATER BRANCH TO PUBLIC LAVATORY TO 2 FT MAX.
5. ROUTE DOMESTIC WATER PIPING IN SOFFIT, COORDINATE EXACT REQUIREMENTS WITH G.C.

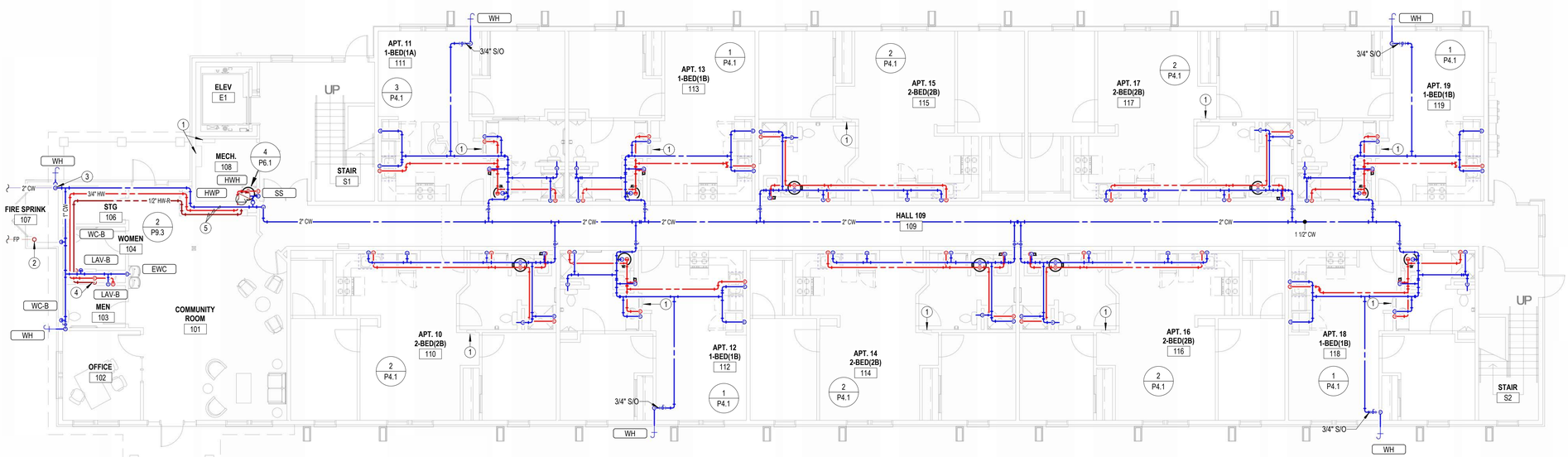

1 / P1.3 FIRST FLOOR DOMESTIC WATER PLAN
1/8" = 1'-0"

JonesGillamRenz
730 N. Ninth
Salina, KS 67401
785.827.0386
1881 Main Street, Suite 301
Kansas City, MO 64108
jgr@jgrarchitects.com

RESIDENCE AT GREEN MEADOW

NEW SENIOR LIVING FACILITY

SAN ANGELO, TEXAS

STATE OF TEXAS
TIMOTHY C. TREDWAY
95252
LICENSED
PROFESSIONAL ENGINEER
11-15-2024

REVISIONS:

DATE: 11/15/2024
JOB: 24-3395
SHEET NO.:

P1.3

COPYRIGHTED ©

LST Consulting Engineers, PA
MANHATTAN
4809 Vue Du Lac Place, Suite 201
Manhattan, KS 66503
785.587.8042
WICHITA
125 S. Washington, Suite 150
Wichita, KS 67202
316.285.0696
www.LSTengineers.com
mail@LSTengineers.com

Project 24034 **11/15/2024**

NOTES BY SYMBOL

1. ELECTRICAL EQUIPMENT SHOWN FOR COORDINATION. DO NOT ROUTE PIPING ABOVE OR BELOW EQUIPMENT, AND MAINTAIN WORKING CLEARANCE SHOWN.
2. PROVIDE 1" WATER SERVICE TO APARTMENT WITH SHUT-OFF VALVE. SEE TYPICAL APARTMENT RISER DIAGRAM ON SHEET P9.2 FOR ADDITIONAL INFORMATION.

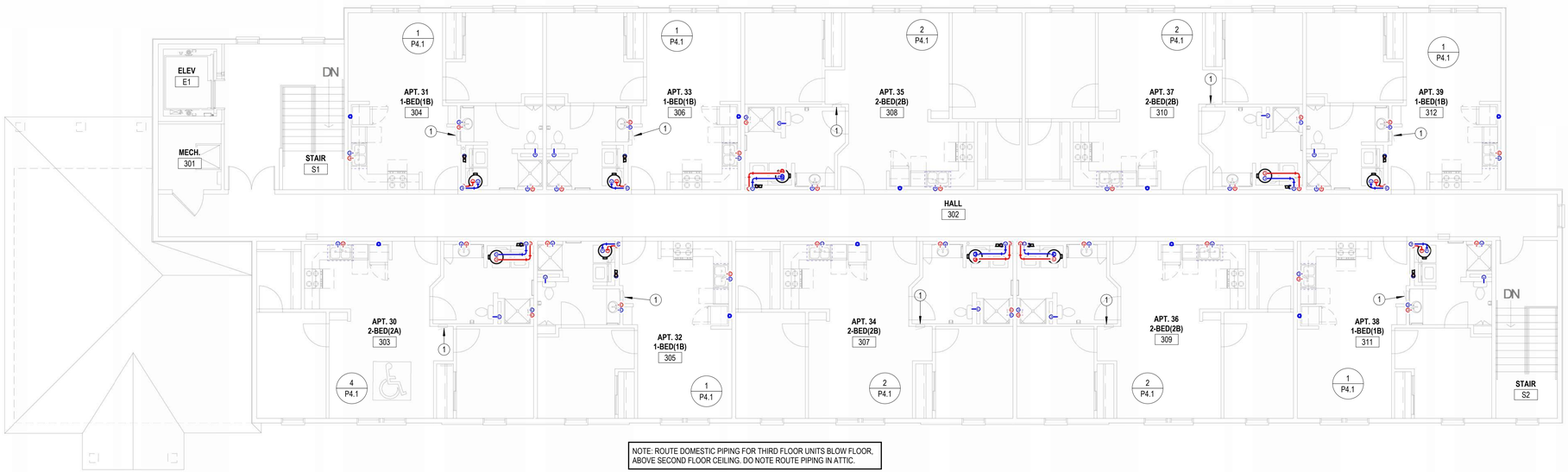

NOTE: ROUTE DOMESTIC PIPING FOR THIRD FLOOR UNITS BLOW FLOOR, ABOVE SECOND FLOOR CEILING. DO NOTE ROUTE PIPING IN ATTIC.

2 / P1.4 THIRD FLOOR DOMESTIC WATER PLAN
1/8" = 1'-0"

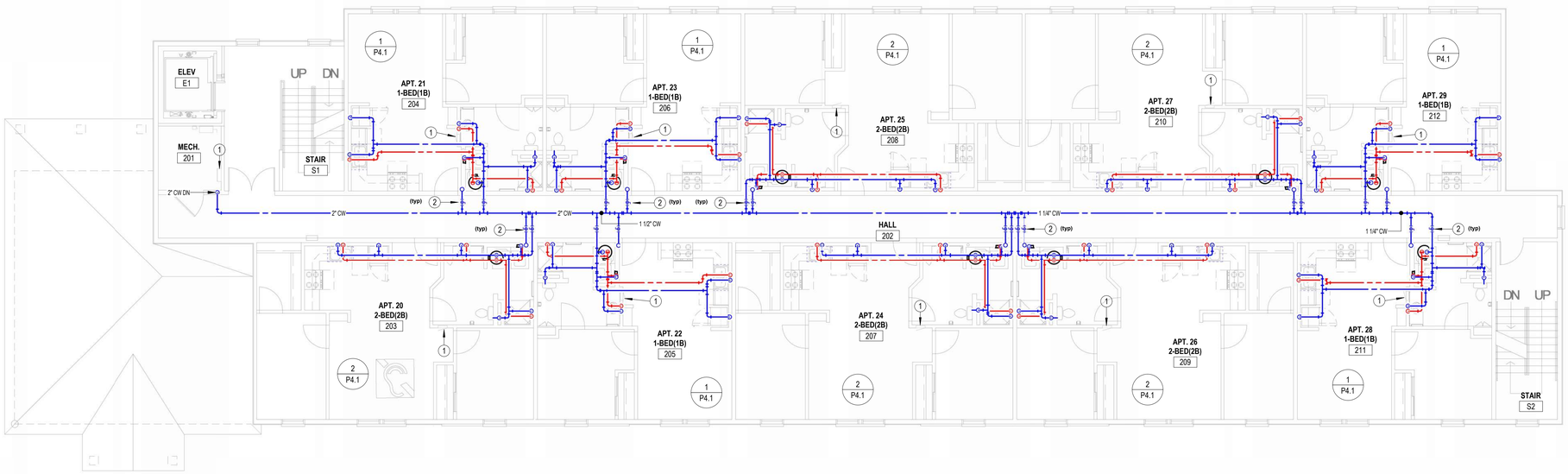

1 / P1.4 SECOND FLOOR DOMESTIC WATER PLAN
1/8" = 1'-0"

JonesGillamRenz
730 N. Ninth
Salina, KS 67401
785.827.0386
1881 Main Street, Suite 301
Kansas City, MO 64108
jgr@jgrarchitects.com

RESIDENCE AT GREEN MEADOW

NEW SENIOR LIVING FACILITY

SAN ANGELO, TEXAS

STATE OF TEXAS
TIMOTHY C. TREDWAY
95252
LICENSED PROFESSIONAL ENGINEER
11-15-2024

REVISIONS:

DATE: 11/15/2024
JOB: 24-3395
SHEET NO.:

P1.4

COPYRIGHTED ©

LST Consulting Engineers, PA
MANHATTAN
4809 Vue Du Lac Place, Suite 201
Manhattan, KS 66503
785.587.8042
WICHITA
125 S. Washington, Suite 150
Wichita, KS 67202
316.285.0696
www.LSTengineers.com
mail@LSTengineers.com

Project 24034 **11/15/2024**

NOTES BY SYMBOL

1. ELECTRICAL EQUIPMENT SHOWN FOR COORDINATION. DO NOT ROUTE PIPING ABOVE OR BELOW EQUIPMENT, AND MAINTAIN WORKING CLEARANCE SHOWN.
2. PROVIDE 1/2" VALVED BRANCH BELOW SINK AND CONNECT DISHWASHER. ROUTE PIPING ALONG BACK OF CABINETRY, COORDINATE EXACT ROUTING WITH G.C. COORDINATE EXACT REQUIREMENTS WITH DISHWASHER PROVIDED.
3. SEE OVERALL DOMESTIC WATER PLANS FOR CONTINUATION.

NOTE: ROUTE DOMESTIC PIPING FOR 3RD FLOOR UNITS BLOW FLOOR, ABOVE 2ND FLOOR CEILING. DO NOTE ROUTE PIPING IN ATTIC.

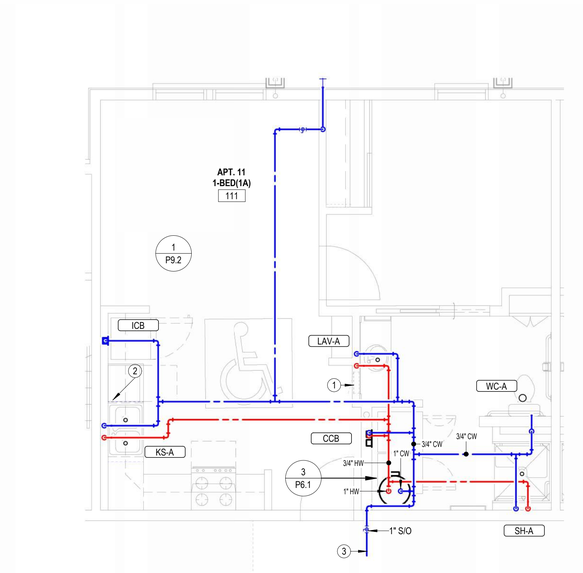

3 / P4.1 1 BEDROOM ACCESSIBLE ENLARGED DOMESTIC WATER
1/4" = 1'-0"

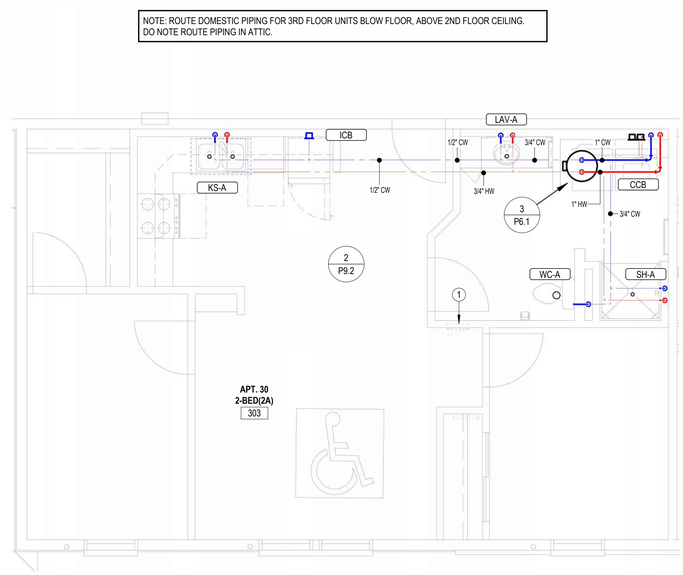

4 / P4.1 2 BEDROOM ACCESSIBLE ENLARGED DOMESTIC WATER
1/4" = 1'-0"

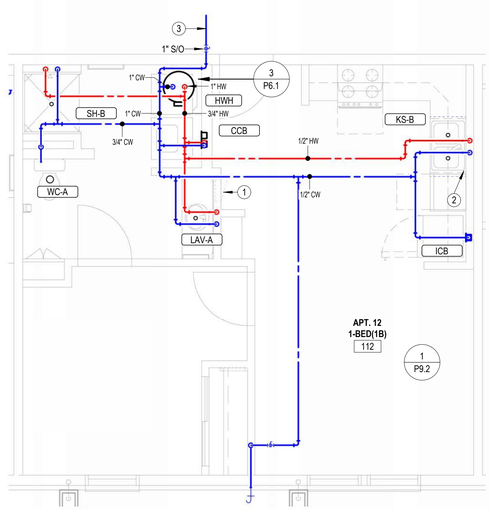

1 / P4.1 1 BEDROOM ENLARGED DOMESTIC WATER
1/4" = 1'-0"

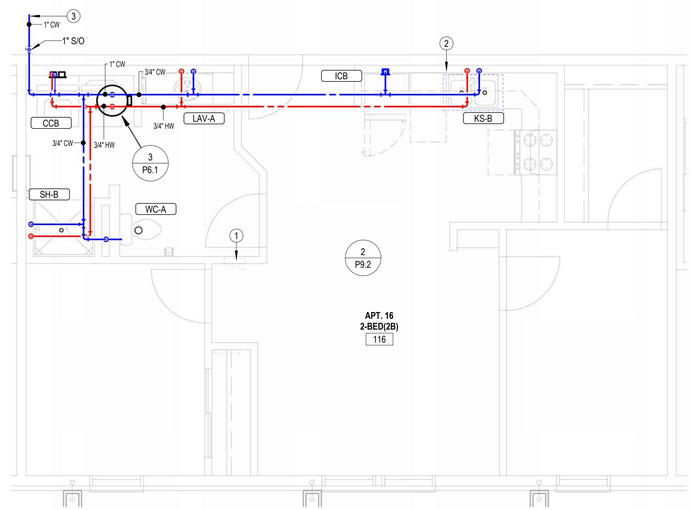

2 / P4.1 2 BEDROOM ENLARGED DOMESTIC WATER
1/4" = 1'-0"

JonesGillamRenz
730 N. Ninth
Salina, KS 67401
785.827.0386
1881 Main Street, Suite 301
Kansas City, MO 64108
jgr@jgrarchitects.com

RESIDENCE AT GREEN MEADOW

NEW SENIOR LIVING FACILITY

SAN ANGELO, TEXAS

STATE OF TEXAS
TIMOTHY C. TREDWAY
95252
LICENSED
PROFESSIONAL ENGINEER
11-15-2024

REVISIONS:

DATE: 11/15/2024
JOB: 24-3395
SHEET NO.:

P4.1

COPYRIGHTED ©

LST Consulting Engineers, PA
MANHATTAN
4809 Vue Du Lac Place, Suite 201
Manhattan, KS 66503
785.587.8042
WICHITA
125 S. Washington, Suite 150
Wichita, KS 67202
316.285.0696
www.LSTengineers.com
mail@LSTengineers.com

Project 24034 11/15/2024

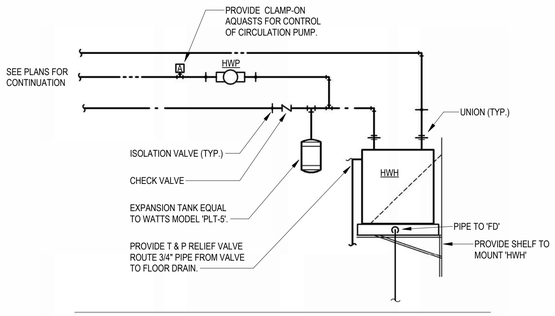

4 / P6.1 WATER HEATER ON SHELF PIPING DIAGRAM
NOT TO SCALE

Plumbing Fixture Schedule

Mark	Manufacturer	Model	Description	ADA	Trim Manufacturer M/N	Domestic Connections			Drain-Waste-Vent			Notes
						Cold Water	Hot Water	Piping Size(s)	Drain Size	DWV Tee	Vent Size	
CCB	IPS CORP.	W4700	Washing machine box with 2" PVC/ABS drain coupling and kockout test cap. Two, 1/4 turn adaptor ball valves, sweat connection.			Yes	Yes	1/2"	2"	2"	2"	
EWC	Elkay	EMABFTLDDWSLK	Dual Height, self-contained water cooler with stainless steel basin, front and side push bar actuator, lead-free, 120v. Provide with EZH20 bottle filling station, and model 98313C accessory apron.	Yes		Yes	No	1/2"	1 1/4"	2"	2"	1
FD	Sioux Chief	833	Adjustable floor drain with nickel bronze strainer. Provide Proset trap protection device.						3"			
FS	Sioux Chief	861	PVC floor sink with PVC strainer. Porvide Proset Trapgaurd trap protection device.						4"			
ICB	IPS CORP.	FRIB12	Ice maker connection box with 1/4 turn ball valve and 1/2" sweat copper connection.			Yes	No	1/2"	2"			
KS-A	JUST	DL-ADA-2233-A-GR	Two compartment 20 GA stainless steel sink, self rimming, 14"x16"x8"D inside, fully undercoated, faucet holes as required. Single handle kitchen sink faucet with hose spray, and basket strainer. IN-SINK-ERator: "Badger 5" garbage disposal, 1/2hp, 120V cord and plug connected.	Yes	Kohler / K-10412	Yes	Yes	1/2"	2"	2"	2"	1,2,3,4,5
KS-B	JUST	DL-2233-A-GR	Two compartment 20 GA stainless steel sink, self rimming, 14"x16"x5"D inside, fully undercoated, faucet holes as required, and drain holes center rear. Single handle kitchen sink faucet with hose spray, and basket strainer. IN-SINK-ERator: "Badger 5" garbage disposal, 1/2hp, 120V cord and plug connecte	No	Kohler / K-10412	Yes	Yes	1/2"	2"	2"	2"	1,2,3,4,5
LAV-A	KOHLER	2196-4-0	20"W x 17" Self-Rimming lavatory. Faucet holes On 4" Centers. Single handled 0.5 GPM faucet. Provided with pop-drain.	Yes	Kohler / 1518-4NDRA	Yes	Yes	1/2"	2"	2"	2"	1,2,3
LAV-B	KOHLER	2196-4-0	20"W x 17" Self-Rimming lavatory. Faucet holes On 4" Centers. Single handled 0.5 GPM faucet. Provide with grid drain, point of use thermostatic mixing valve, and chrome plated or braided stainless steel domestic water supply lines.	Yes	Kohler / 1518-4NDRA	Yes	Yes	1/2"	2"	2"	2"	1,2,3
SH-A	AQUA BATH CO.	C4136BF-OT-FUS 3/4"	Center drain option, reinforced fiberglass ADA roll-in shower, 36"Wx36"Dx80"H with integral soap/toiletry shelves and grab bars in accordance with ADA requirements, fold-up seat, right or left hand rough-in as required, white finish. Provide with collapsible dam. Entire assembly shall have nickel finish. Max 2.0 GPM	Yes	Kohler / K-8304-KS pressure balancing valve with integral temperature limits and stops / K-TS10583-4 valve trim / K-22173 wall supply elbow / K-9514 60" hose / K-22163 hand shower / K-8524 and K-349 slide bar.	Yes	Yes	1/2"	2"	2"	2"	1
SH-B	AQUA BATH CO.	C4136BF-OT-FUS 3/4"	Center drain option, reinforced fiberglass ADA base model shower, 36"Wx36"Dx80"H with integral soap/toiletry shelves in accordance with ADA requirements, right or left hand rough-in as required, white finish. Provide with collapsible dam and blocking for grab bars and seat to be added at tenant's request. Entire assembly shall have nickel finish. Max 2.0 GPM	Yes	Kohler / K-8304-KS pressure balancing valve with integral temperature limits and stops / K-TS10583-4 valve trim	Yes	Yes	1/2"	2"	2"	2"	
SS	FIAT	MSB-2424	One piece molded stone mop basin, 24" square, stainless steel integral drain body with caulk connection, stainless steel wall gaurds. Faucet with hose thread outlet, vacuum breaker, pail hook, wall brace, and metal lever handels.	No	Delta / 28T9	Yes	Yes	3/4"	3"	3"	3"	4
WC-A	KOHLER	5296 Highline	Two piece, 12" rough-in, elongated 16-1/2" high bowl, siphon jet flushing action, actuator located on open side of room. Elongated closed front seat and cover. Provide with 1/4" brass ball valve at wall connection.	No	Kohler / K-5588	Yes	No	1/2"	4"	2"	2"	1
WC-B	KOHLER	5296 Highline	Two piece, 12" rough-in, elongated 16-1/2" high bowl, siphon jet flushing action, actuator located on open side of room. Elongated closed front seat and cover. Provide with 1/4" brass ball valve at wall connection.	Yes	Kohler / K-5588	Yes	No	1/2"	4"	2"	2"	1
WH	Woodford	67	Non-Freeze Type Wall Hydrant, With Double Check Backflow Preventer, Valve On The Inside Of The Wall, Spout With Backflow Preventer, And Loose Key Socket On The Outside Of The Wall. Make Arrangements With The General Contractor To Provide The Necessary Recess In The Wall. Where A Riser To A Wall Hydrant Occurs In An Outside Wall The Contractor Shall Insulate The Chase With 2" Styrofoam Insulation On All Sides Of The Chase, Except The Inside Wall Of The Chase. Provide Shutoff Valve In Accessible Location.	No		Yes	No	3/4"				

GENERAL:
• Provide fixtures with all trim necesary for complete installation.
• All toilets, lavatory faucets, showerheads, and kitchen faucets shall have EPA's WaterSense label.
NOTES:
1. In areas open to the public, fixture and installation to meet requirements of Americans with Disabilities Act. In apartments, fixture and installation to meet requirements of the Fair Housing Act.
2. Provide Dearborn supplies with stops and escutcheon plate, 1-1/4" cast brass p-trap.
3. Insulate water and waste piping below fixture. Utilize insulation kit equivalent to LavGuard by Truebro.
4. Trim shall be provided with polished chrome finish.
5. Insulate water and waste piping below sink. Utilize insulation kit equivalent to LavGuard by Truebro. Provide Plumberex model #3071WD-N waste disposal cover.

Domestic Water Equipment Schedule

Mark	Manufacturer	Model	Specification	Notes
HWH	AO Smith	ENJ-40	40 Gallon electric water heater, 0.93 UEF, 4500 watts, 208v heating element, 21 GPH recovery @ 90°F temp rise. Supplied with temperature and pressure relief valve and brass drain valve. Water heater shall have temperature controls set to limit supply temperature to 120°F or less. Provide wall hung platform for water heater equal to Holdrite #60-SWHP-W. Coordinate exact location a mounting height with Architect.	1
HWP	Bell & Gossett	NBF-33	Circulation pump, bronze body, 10 GPM @ 10' head, 120 VAC. Provide clamp-on aquastat for pump control.	2

GENERAL:
• Provide fixtures with all trim necesary for complete installation.
NOTES:
1. Provide wall hung platform for water heater equal to Holdrite #60SWHP-W. Coordinate exact location and mounting with height with architect.
2. Pump shall have controls to prevent startup within 5 minutes from the end of the previous heating cycle. hot water recirculation system shall meet all requirements of 2015 IECC.

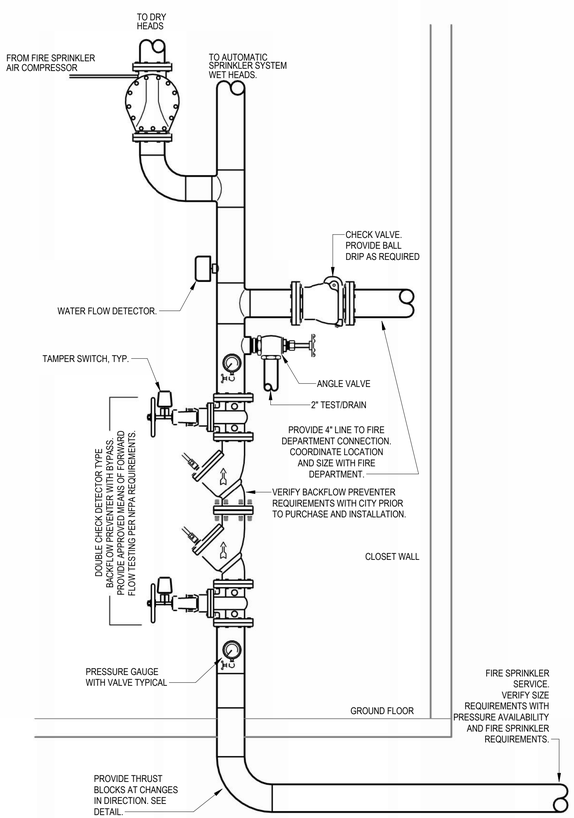

1 / P6.1 FIRE PROTECTION RISER DIAGRAM
NOT TO SCALE

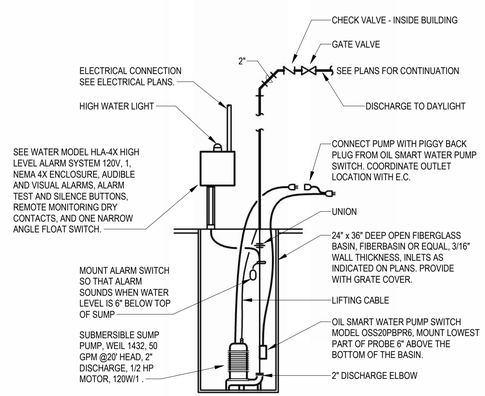

2 / P6.1 ELEVATOR SUMP PUMP
12" = 1'-0"

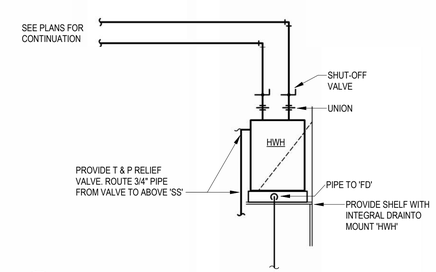

3 / P6.1 APPARTMENT WATER HEATER DIAGRAM
NOT TO SCALE

JonesGillamRenz
730 N. Ninth
Salina, KS 67401
785.827.0386
1881 Main Street, Suite 301
Kansas City, MO 64108
jgr@jgrarchitects.com

RESIDENCE AT GREEN MEADOW
NEW SENIOR LIVING FACILITY
SAN ANGELO, TEXAS

STATE OF TEXAS
TIMOTHY C. TREDWAY
95252
LICENSED PROFESSIONAL ENGINEER
11-15-2024

REVISIONS:

DATE: 11/15/2024
JOB: 24-3395
SHEET NO.:
P6.1

COPYRIGHTED ©

LST Consulting Engineers, PA
MANHATTAN
4809 Vue Du Lac Place, Suite 201
Manhattan, KS 66503
785.587.8042
WICHITA
125 S. Washington, Suite 150
Wichita, KS 67202
316.285.0696
www.LSTengineers.com
mail@LSTengineers.com

Project 24034

11/15/2024

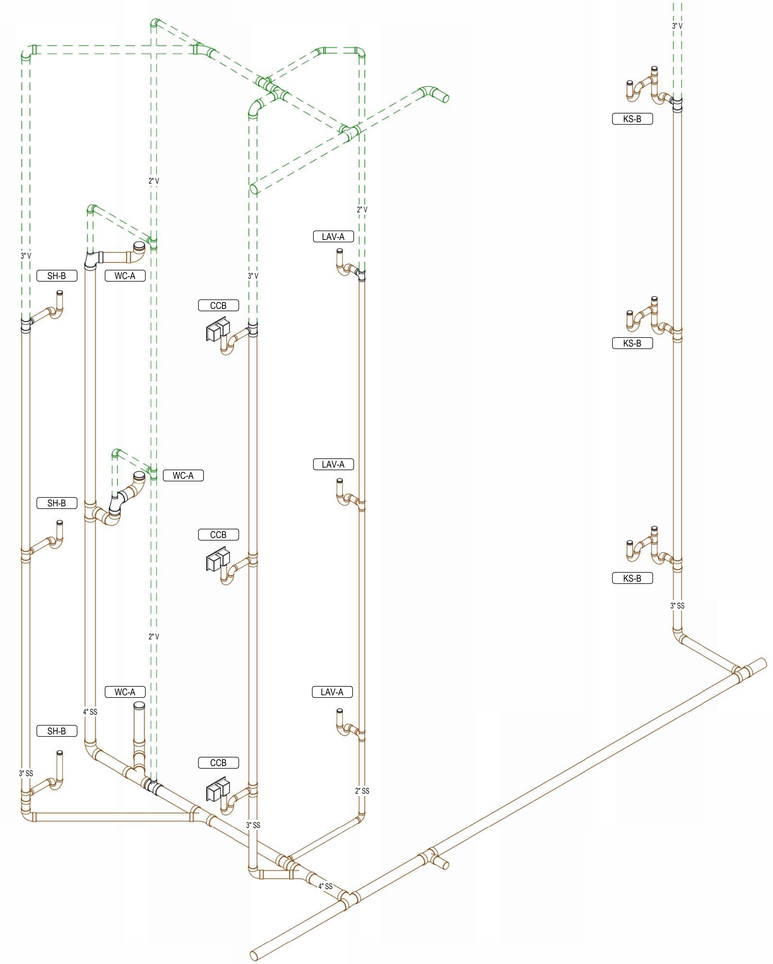

1 P9.1 TYPICAL 2 BED ROOM WASTE AND VENT RISER

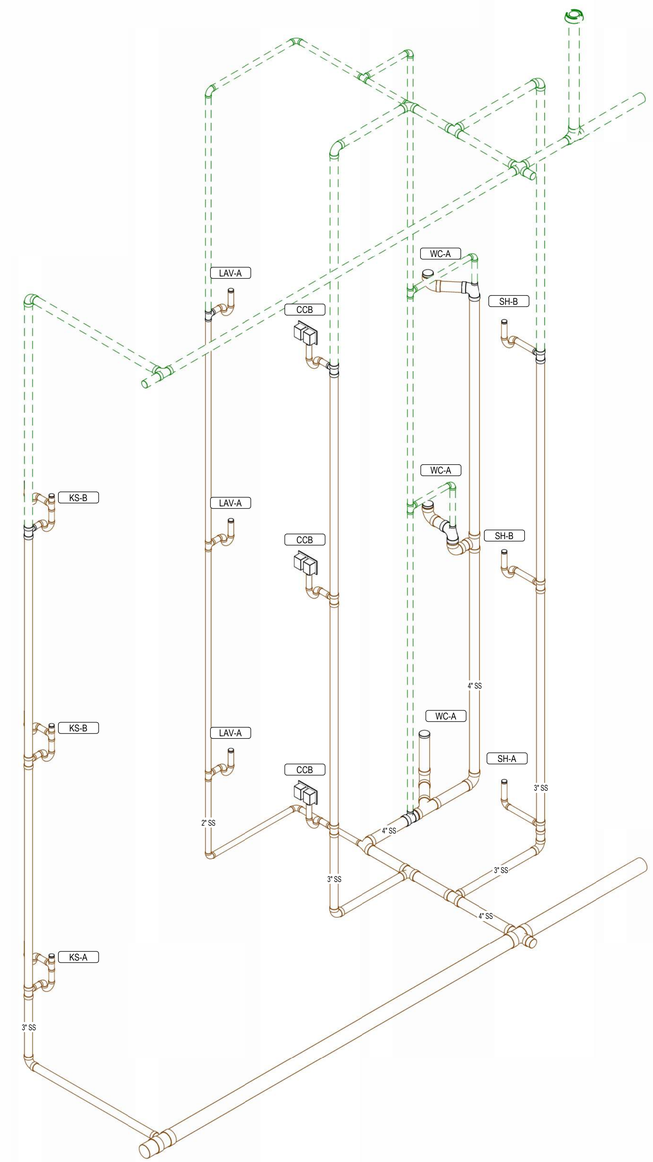

2 P9.1 TYPICAL 1 BED ROOM WASTE AND VENT RISER

JonesGillamRenz
730 N. Ninth
Salina, KS 67401
785.827.0386
1881 Main Street, Suite 301
Kansas City, MO 64108
jgr@jgrarchitects.com

RESIDENCE AT GREEN MEADOW

NEW SENIOR LIVING FACILITY

SAN ANGELO, TEXAS

STATE OF TEXAS
TIMOTHY C. TREDWAY
95252
LICENSED
PROFESSIONAL ENGINEER
11-15-2024

REVISIONS:

DATE: 11/15/2024
JOB: 24-3395
SHEET NO.:

P9.1

COPYRIGHTED ©

NOTE: ROUTE DOMESTIC PIPING FOR 3RD FLOOR UNITS BLOW FLOOR, ABOVE 2ND FLOOR CEILING.
DO NOTE ROUTE PIPING IN ATTIC.

LST Consulting Engineers, PA

MANHATTAN
4809 Vue Du Lac Place, Suite 201
Manhattan, KS 66503
785.587.8042

WICHITA
125 S. Washington, Suite 150
Wichita, KS 67202
316.285.0696

www.LSTengineers.com
mail@LSTengineers.com

Project 24034 **11/15/2024**

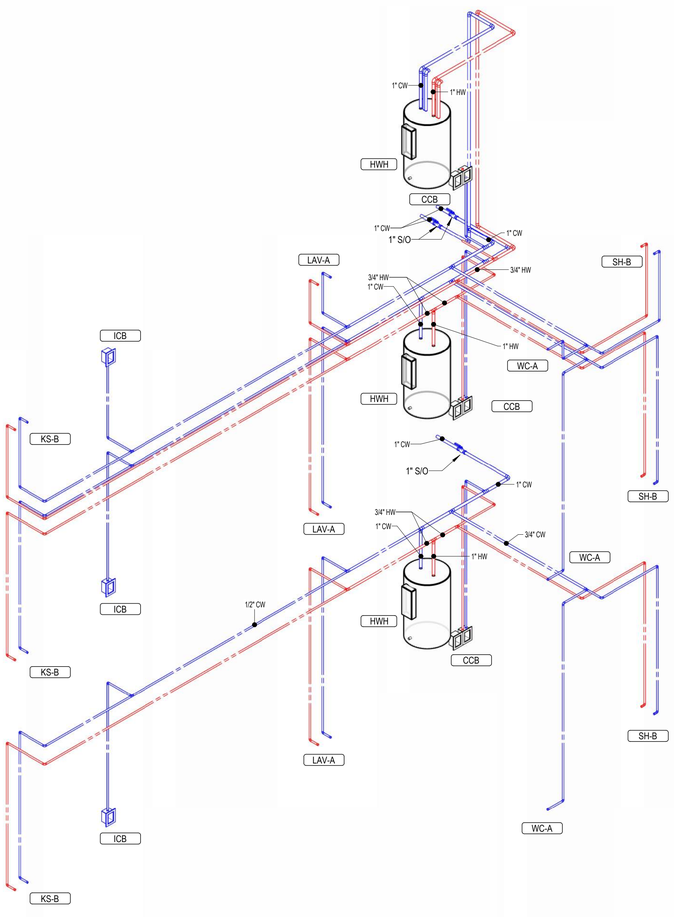

2 P9.2 TYPICAL 2 BED ROOM DOMESTIC WATER RISER

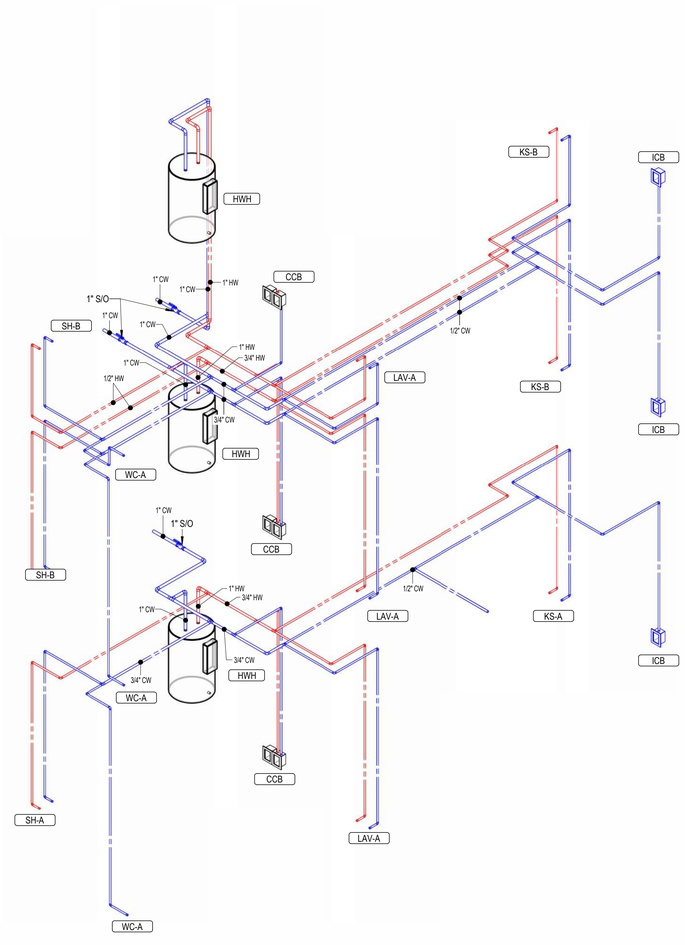

1 P9.2 TYPICAL 1 BED ROOM DOMESTIC WATER RISER

JonesGillamRenz
730 N. Ninth
Salina, KS 67401
785.827.0386
1881 Main Street, Suite 301
Kansas City, MO 64108
jgr@jgrarchitects.com

RESIDENCE AT GREEN MEADOW

NEW SENIOR LIVING FACILITY

SAN ANGELO, TEXAS

STATE OF TEXAS
TIMOTHY C. TREDWAY
95252
LICENSED PROFESSIONAL ENGINEER
11-15-2024

REVISIONS:

DATE: 11/15/2024
JOB: 24-3395
SHEET NO.:

P9.2

COPYRIGHTED ©

LST Consulting Engineers, PA
MANHATTAN
4809 Vue Du Lac Place, Suite 201
Manhattan, KS 66503
785.587.8042
WICHITA
125 S. Washington, Suite 150
Wichita, KS 67202
316.285.0696
www.LSTengineers.com
mail@LSTengineers.com

Project 24034 **11/15/2024**

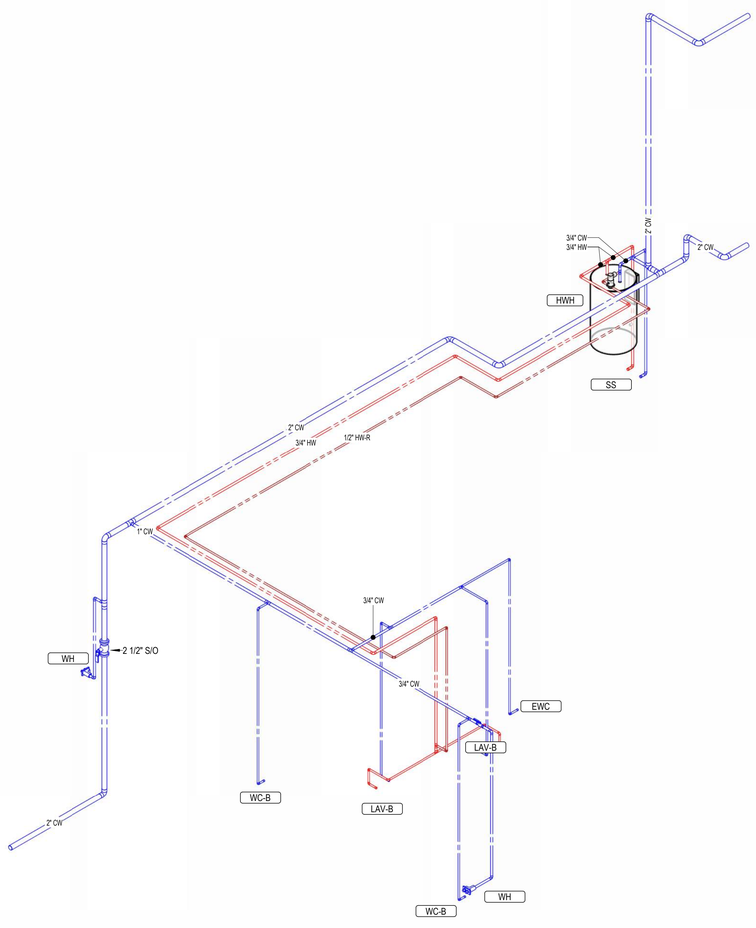

2 P9.3 DOMESTIC WATER RISER DIAGRAM
NO SCALE

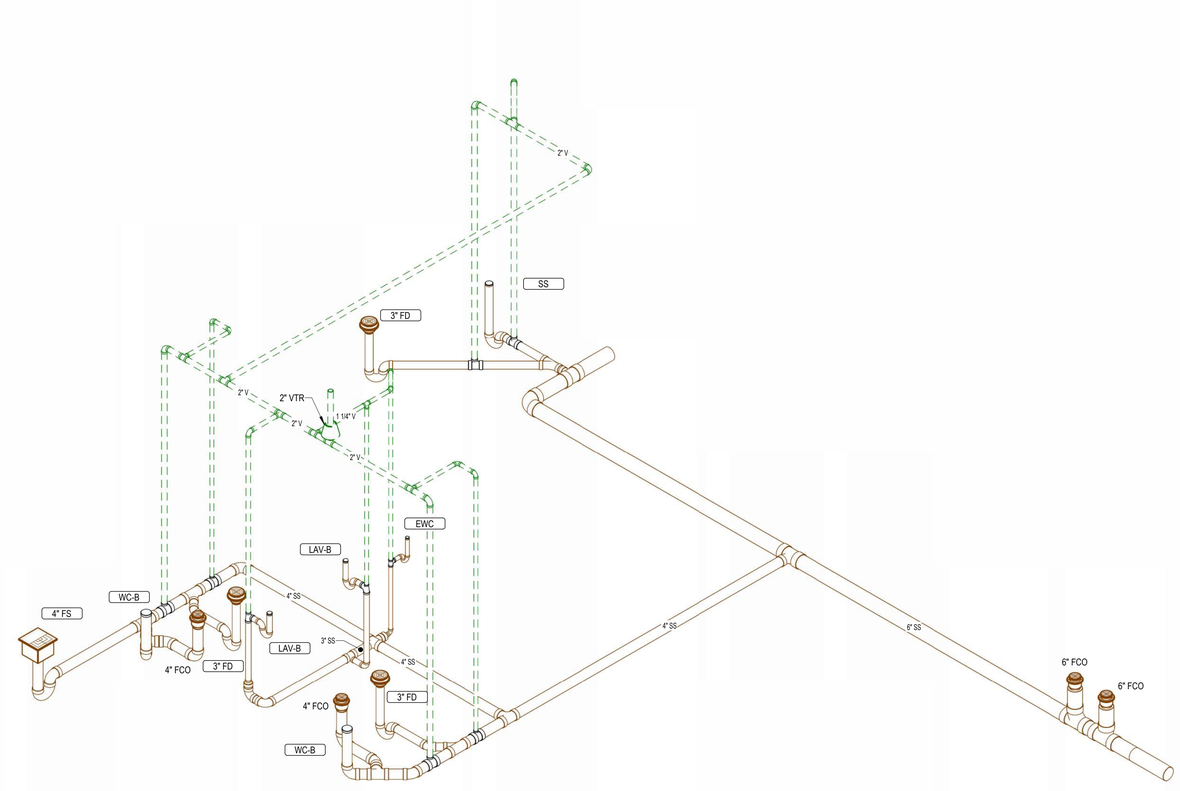

1 P9.3 WASTE & VENT RISER DIAGRAM
NO SCALE

JGR JonesGillamRenz
730 N. Ninth
Salina, KS 67401
785.827.0386
1881 Main Street, Suite 301
Kansas City, MO 64108
jgr@jgrarchitects.com

RESIDENCE AT GREEN MEADOW

NEW SENIOR LIVING FACILITY

SAN ANGELO, TEXAS

STATE OF TEXAS
TIMOTHY C. TREDWAY
95252
LICENSED
PROFESSIONAL ENGINEER
11-15-2024

REVISIONS:

DATE:	11/15/2024
JOB:	24-3395
SHEET NO.:	

P9.3

COPYRIGHTED ©