Wichita-Sedgwick County
Metropolitan Area Building
and Construction Department

REVIEWED FOR CODE COMPLIANCE

CORRECTIONS OR COMMENTS MADE ON THESE DRAWINGS AND THIS DOCUMENT DURING THIS REVIEW DO NOT RELIEVE CONTRACTOR FROM COMPLIANCE WITH ALL REQUIREMENTS OF THE CODE OF THE MABCD, THE CITY OF WICHITA OR SEDGWICK COUNTY. THIS REVIEW IS ONLY FOR GENERAL CONFORMANCE OF THE CODE. THE CONTRACTOR IS RESPONSIBLE FOR CONFORMING AND CORRELATING ALL TECHNIQUES OF CONSTRUCTION. THIS APPROVAL IS SUBJECT TO PROVISIONS OF SECTION 107.4 OF THE 2012 INTERNATIONAL BUILDING CODE.

DATE: 02/19/25 BY: William Jerauld Jr

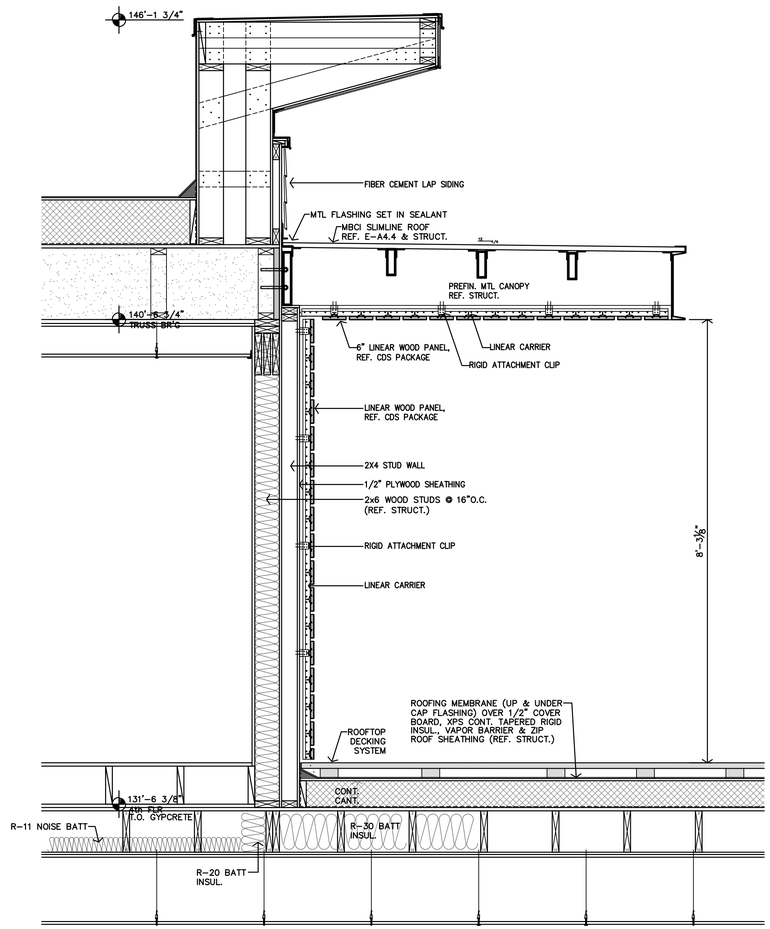

B ROOFTOP DECK WALL SECTION
3/4"=1'-0"

REFER TO CDS INTERIOR DESIGN PACKAGE.
*ALL DRAWINGS SHOWING BASIC DESIGN INTENT, CONTRACTOR TO REVIEW AND PROVIDE ALL FINISHES, MATERIALS, AND PRODUCTS AS SPECIFIED.

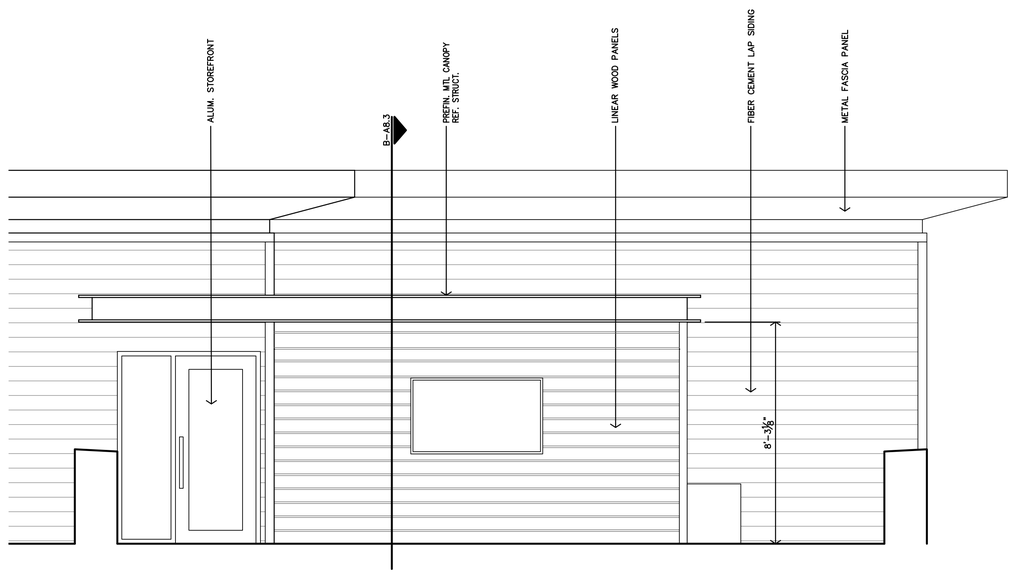

A ROOFTOP DECK ELEVATION
3/8"=1'-0"

JonesGillamRenz
730 N. Ninth 1881 Main Street, Suite 301
Salina, KS 67401 Kansas City, MO 64108
785.827.0386 jgr@jgrarchitects.com

THE RESIDENCE AT HERITAGE WEST

NEW SENIOR-LIVING FACILITY

ANDOVER, KANSAS

CHRISTOPHER R. GILLAM
REGISTERED ARCHITECT
6979
1/3/2025
KANSAS

REVISION:

DATE: 1-3-2025
JOB: 24-3379
SHEET NO.:

A8.3

COPYRIGHTED©

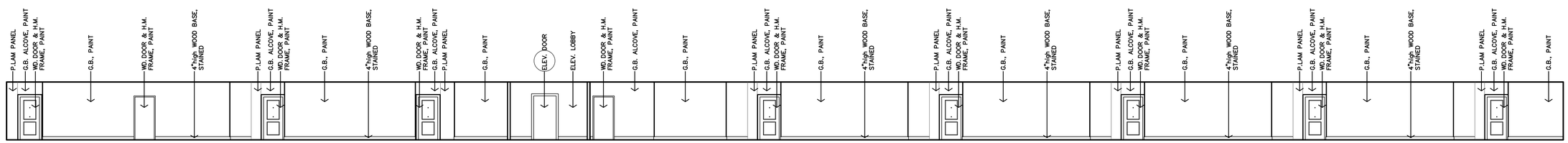

F **HALL #202 & #203 INTERIOR ELEVATION**
1/8"=1'-0" HALLS #302 & #303 SIM.

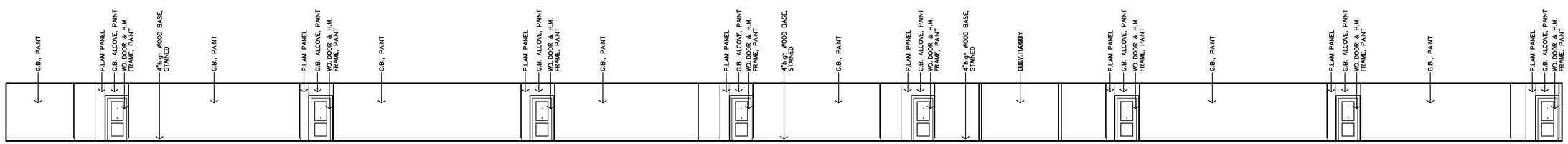

E **HALL #202 & #203 INTERIOR ELEVATION**
1/8"=1'-0" HALLS #302 & #303 SIM.

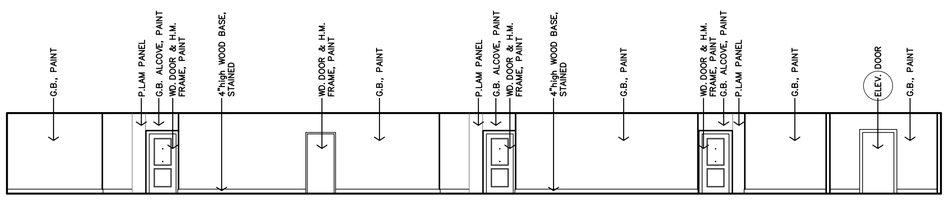

D **HALL #108 INTERIOR ELEVATION**
1/8"=1'-0"

REFER TO CDS INTERIOR DESIGN PACKAGE.
*ALL DRAWINGS SHOWING BASIC DESIGN INTENT, CONTRACTOR TO REVIEW AND PROVIDE ALL FINISHES, MATERIALS, AND PRODUCTS AS SPECIFIED.

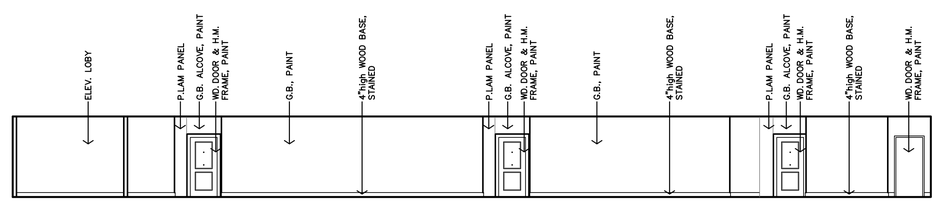

C **HALL #108 INTERIOR ELEVATION**
1/8"=1'-0"

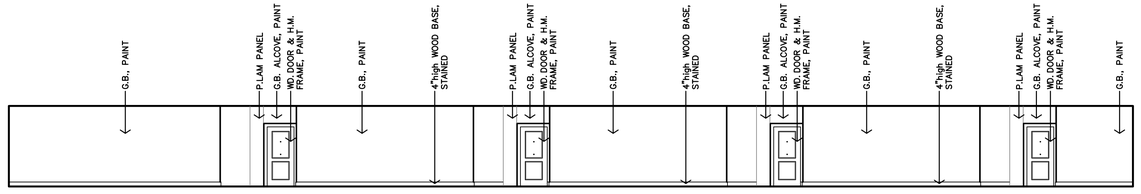

B **HALL #107 INTERIOR ELEVATION**
1/8"=1'-0"

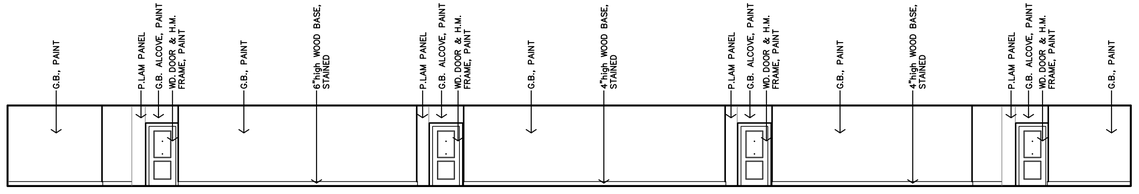

A **HALL #107 INTERIOR ELEVATION**
1/8"=1'-0"

Wichita-Sedgwick County
Metropolitan Area Building
and Construction Department

REVIEWED FOR CODE COMPLIANCE

CORRECTIONS OR COMMENTS MADE ON THESE DRAWINGS AND THIS DOCUMENT DURING THIS REVIEW DO NOT RELIEVE CONTRACTOR FROM COMPLIANCE WITH ALL REQUIREMENTS OF THE CODE OF THE MARCH, THE CITY OF WICHITA OR SEDGWICK COUNTY. THIS REVIEW IS ONLY FOR GENERAL CONFORMANCE OF THE CODE. THE CONTRACTOR IS RESPONSIBLE FOR CONFORMING AND CORRELATING ALL TECHNIQUES OF CONSTRUCTION. THIS APPROVAL IS SUBJECT TO PROVISIONS OF SECTION 107.4 OF THE 2012 INTERNATIONAL BUILDING CODE.

DATE: 02/19/25 BY: William Jerauld Jr

JonesGillamRenz
730 N. Ninth 1881 Main Street, Suite 301
Salina, KS 67401 Kansas City, MO 64108
785.827.0386 jgr@jgrarchitects.com

THE RESIDENCE AT HERITAGE WEST

NEW SENIOR-LIVING FACILITY

ANDOVER, KANSAS

CHRISTOPHER R. GILLAM
REGISTERED ARCHITECT
6979
1/3/2025
KANSAS
ARCHITECT

REVISION:

DATE: 1-3-2025
JOB: 24-3379
SHEET NO.:

A8.4

COPYRIGHTED©

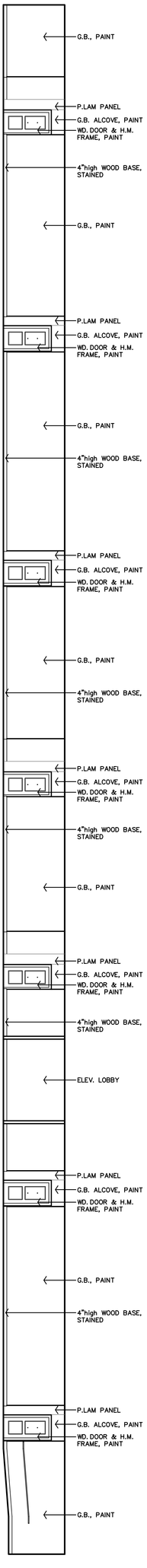

A HALL #403 & #404 INTERIOR ELEVATION
1/8"=1'-0" HALLS #402 & #303 SIM.

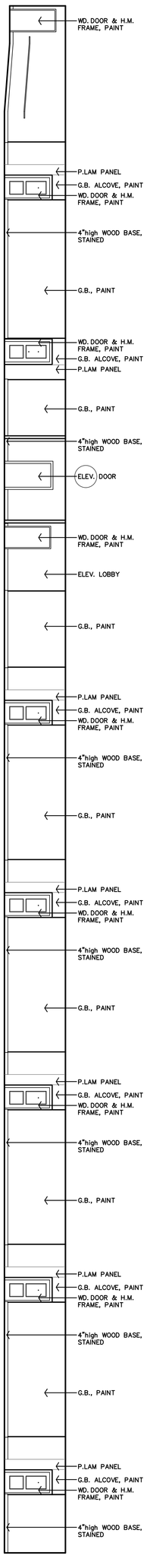

B HALL #403 & #404 INTERIOR ELEVATION
1/8"=1'-0" HALLS #402 & #303 SIM.

REFER TO CDS INTERIOR DESIGN PACKAGE. CONTRACTOR TO REVIEW AND PROVIDE ALL FINISHES, MATERIALS, AND PRODUCTS AS SPECIFIED.

Wichita-Sedgwick County
Metropolitan Area Building
and Construction Department

REVIEWED FOR CODE COMPLIANCE

CORRECTIONS OR COMMENTS MADE ON THESE DRAWINGS DO NOT RELIEVE THE CONTRACTOR FROM COMPLYING WITH ALL REQUIREMENTS OF CONSTRUCTION PERMIT DOCUMENTS, WHETHER OR NOT CORRECTIONS OR COMMENTS HAVE BEEN MADE. THE CONTRACTOR IS RESPONSIBLE FOR ERRORS, OMISSIONS, OR DEVIATIONS FROM GENERAL BUILDING CODES, THIS REVIEW IS ONLY FOR GENERAL CONFORMANCE WITH THE INTERNATIONAL BUILDING CODE. THE CONTRACTOR IS RESPONSIBLE FOR CONFORMING TO ALL APPLICABLE CODES. THIS REVIEW SHALL NOT BE CONSTRUED TO BE AN APPROVAL OF A VIOLATION OF ANY PROVISION OF THE INTERNATIONAL BUILDING CODE.

DATE: 021925 BY: William Jarrold Jr

JonesGillamRenz
730 N. Ninth
Salina, KS 67401
785.827.0386
1881 Main Street, Suite 301
Kansas City, MO 64108
jgr@jgrarchitects.com

THE RESIDENCE AT HERITAGE WEST

NEW SENIOR-LIVING FACILITY

ANDOVER, KANSAS

CHRISTOPHER R. CLARK
NO. 23656
REGISTERED ARCHITECT
1/6/2025

DATE: 1-3-2025
JOB: 24-3379
SHEET NO.: **A8.5**
REVISION:

COPYRIGHTED ©

Wichita-Sedgwick County
Metropolitan Area Building
and Construction Department

REVIEWED FOR CODE COMPLIANCE

CORRECTIONS OR COMMENTS MADE ON THESE DRAWINGS AND THIS DOCUMENT DURING THIS REVIEW DO NOT RELIEVE CONTRACTOR FROM COMPLIANCE WITH ALL REQUIREMENTS OF THE CODE OF THE MABCD, THE CITY OF WICHITA OR SEDGWICK COUNTY. THIS REVIEW IS ONLY FOR GENERAL CONFORMANCE OF THE CODE. THE CONTRACTOR IS RESPONSIBLE FOR CONFORMING AND CORRELATING ALL TECHNIQUES OF CONSTRUCTION. THIS APPROVAL IS SUBJECT TO PROVISIONS OF SECTION 107.4 OF THE 2012 INTERNATIONAL BUILDING CODE.

DATE: 02/19/25 BY: William Jerauld Jr

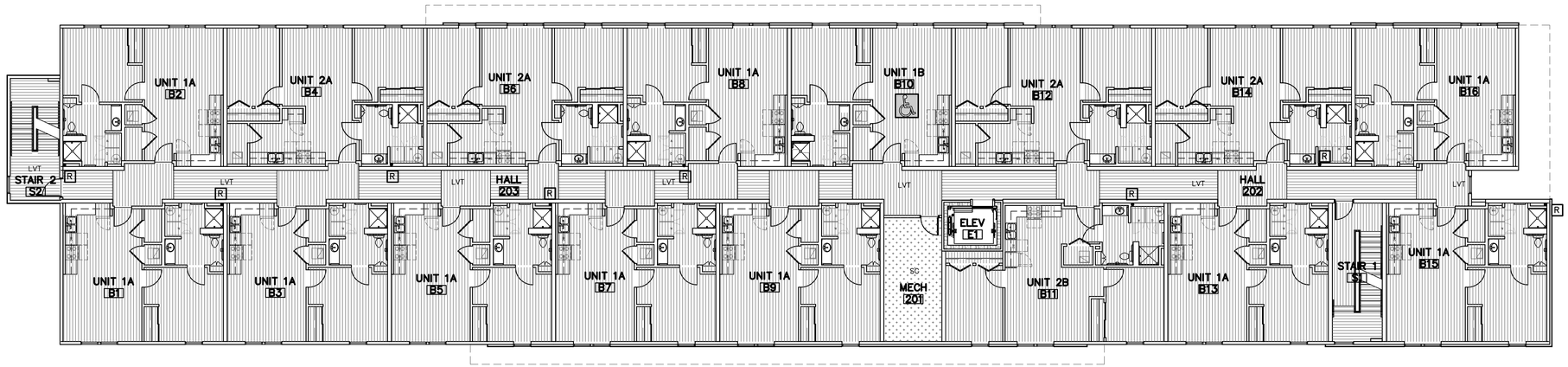

B **SECOND FLOOR PLAN**
3/32"=1'-0"

FLOORING GENERAL NOTES

1. FLOORING CONTRACTOR SHALL VERIFY THAT SUBFLOOR IS LEVEL AND PROPERLY PREPPED PRIOR TO INSTALLATION OF ANY FLOORING MATERIALS.
2. CONTRACTOR SHALL VERIFY THAT FLOORS ARE PREPPED/"FLOORSTONED" FOR LEVEL TRANSITION BETWEEN DIFFERING MATERIALS.
3. CONTRACTOR SHALL COORDINATE WITH INTERIOR ELEVATIONS, FLOOR PLANS AND MISCELLANEOUS DETAILS TO VERIFY ALL AESTHETIC ACCENTS AND DETAILS
4. CUT TILE TIGHT AROUND DOOR FRAMES, AT VCT FLOORS INSTALL CLEAR SILICONE SEALANT AT THE FLOOR/FRAME TRANSITION.
5. INSTALL METAL SCHLUTER TRANSITION BETWEEN FLOOR & WALL MATERIAL TRANSITIONS UNLESS BULLNOSE OR WOOD TRIM IS INDICATED.
6. ADD REDUCER STRIP AT ALL FLOORING TRANSITIONS
7. UNIT KITCHEN & BATH: AT REMOVABLE CABINET FRONTS. WALLS TO BE FINISHED & FLOORING CONTINUOUS UNDERNEATH. NO PLUMBING MODIFICATIONS ALLOWED AFTER CABINET FRONT IS REMOVED.
8. VINYL TILE: PATCH, FILL VOIDS AND ENSURE FLOOR IS LEVEL & READY FOR NEW. INSTALLATION APPROVED BY THE FLOOR MANUFACTURER.
9. CARPET: PATCH, FILL VOIDS, SAND AND LEVEL, BEFORE INSTALLING

FLOORING LEGEND

- SC — SEALED CONCRETE
- CT — CERAMIC TILE
- LVT — LUXURY VINYL TILE
- CONCRETE PAVERS

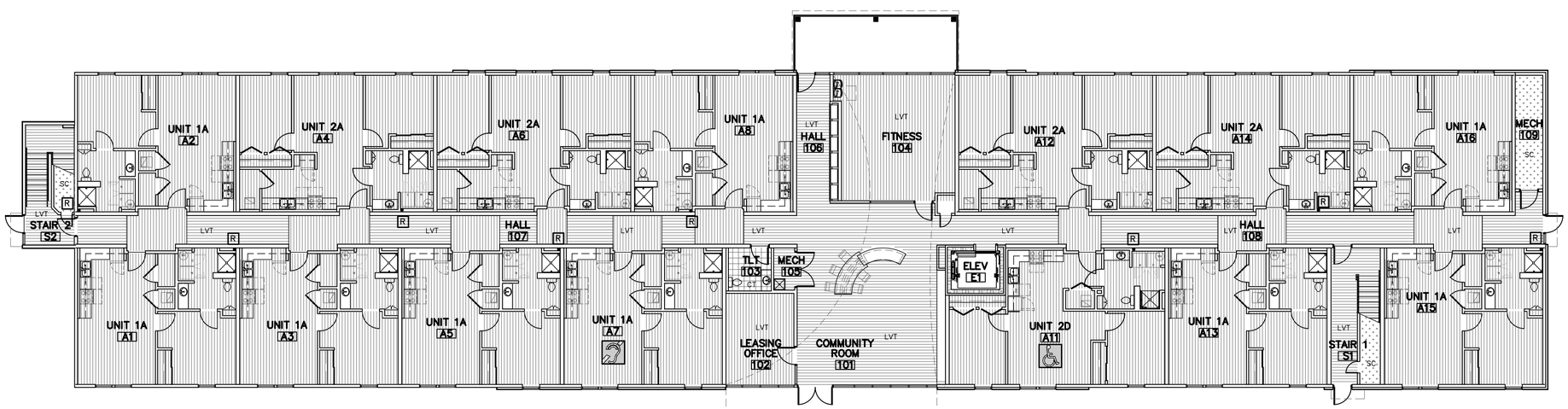

A **FIRST FLOOR PLAN**
3/32"=1'-0"

JonesGillamRenz
730 N. Ninth
Salina, KS 67401
785.827.0386
1881 Main Street, Suite 301
Kansas City, MO 64108
jgr@jgrarchitects.com

THE RESIDENCE AT HERITAGE WEST

NEW SENIOR-LIVING FACILITY

ANDOVER, KANSAS

CHRISTOPHER R. GILLAM
ARCHITECT LICENSED
6979
1/3/2025
KANSAS
ARCHITECT

REVISION:

DATE: 1-3-2025
JOB: 24-3379
SHEET NO.:

A9.1

COPYRIGHTED ©

Wichita-Sedgwick County
Metropolitan Area Building
and Construction Department

REVIEWED FOR CODE COMPLIANCE

CORRECTIONS OR COMMENTS MADE ON THESE DRAWINGS AND THIS DOCUMENT DURING THIS REVIEW DO NOT RELIEVE CONTRACTOR FROM COMPLIANCE WITH ALL REQUIREMENTS OF THE CODE OF THE MABCD, THE CITY OF WICHITA OR SEDGWICK COUNTY. THIS REVIEW IS ONLY FOR GENERAL CONFORMANCE OF THE CODE. THE CONTRACTOR IS RESPONSIBLE FOR CONFORMING AND CORRELATING ALL TECHNIQUES OF CONSTRUCTION. THIS APPROVAL IS SUBJECT TO PROVISIONS OF SECTION 107.4 OF THE 2012 INTERNATIONAL BUILDING CODE.

DATE: 02/19/25 BY: William Jerauld Jr

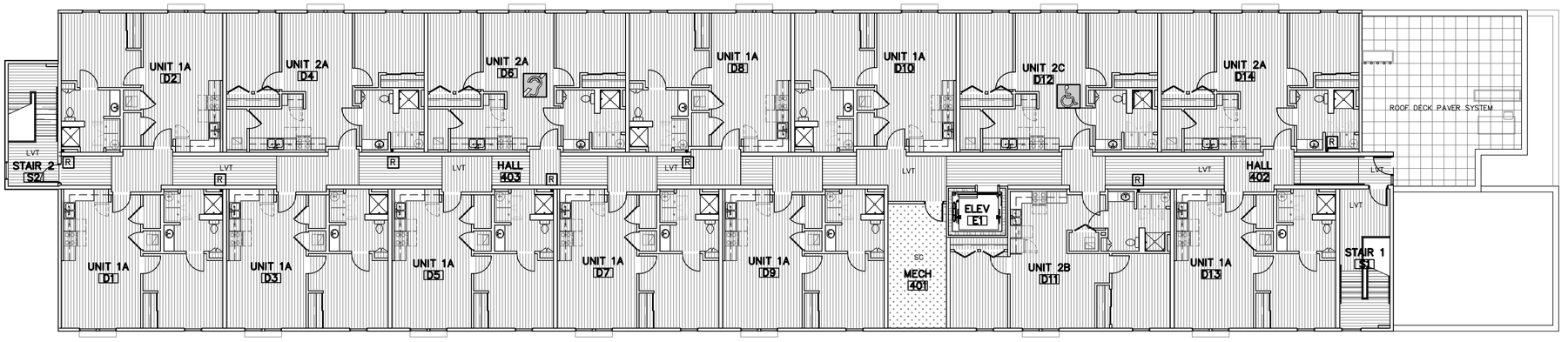

FLOORING GENERAL NOTES

1. FLOORING CONTRACTOR SHALL VERIFY THAT SUBFLOOR IS LEVEL AND PROPERLY PREPPED PRIOR TO INSTALLATION OF ANY FLOORING MATERIALS.
2. CONTRACTOR SHALL VERIFY THAT FLOORS ARE PREPPED/"FLOORSTONED" FOR LEVEL TRANSITION BETWEEN DIFFERING MATERIALS.
3. CONTRACTOR SHALL COORDINATE WITH INTERIOR ELEVATIONS, FLOOR PLANS AND MISCELLANEOUS DETAILS TO VERIFY ALL AESTHETIC ACCENTS AND DETAILS
4. CUT TILE TIGHT AROUND DOOR FRAMES, AT VCT FLOORS INSTALL CLEAR SILICONE SEALANT AT THE FLOOR/FRAME TRANSITION.
5. INSTALL METAL SCHLUTER TRANSITION BETWEEN FLOOR & WALL MATERIAL TRANSITIONS UNLESS BULLNOSE OR WOOD TRIM IS INDICATED.
6. ADD REDUCER STRIP AT ALL FLOORING TRANSITIONS
7. UNIT KITCHEN & BATH: AT REMOVABLE CABINET FRONTS. WALLS TO BE FINISHED & FLOORING CONTINUOUS UNDERNEATH. NO PLUMBING MODIFICATIONS ALLOWED AFTER CABINET FRONT IS REMOVED.
8. VINYL TILE: PATCH, FILL VOIDS AND ENSURE FLOOR IS LEVEL & READY FOR NEW. INSTALLATION APPROVED BY THE FLOOR MANUFACTURER.
9. CARPET: PATCH, FILL VOIDS, SAND AND LEVEL, BEFORE INSTALLING

FLOORING LEGEND

SC	SEALED CONCRETE	CT	CERAMIC TILE
LVT	LUXURY VINYL TILE		CONCRETE PAVERS

B FOURTH FLOOR PLAN
3/32"=1'-0"

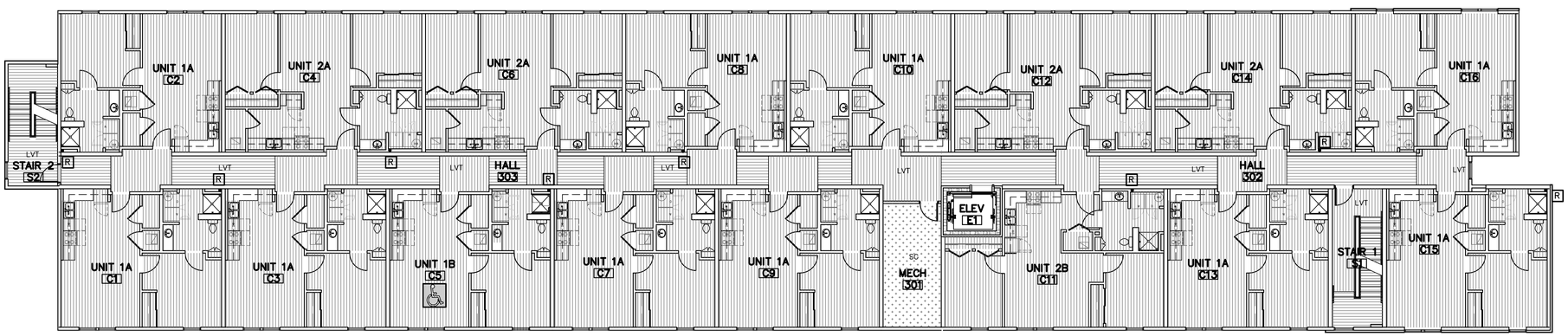

A THIRD FLOOR PLAN
3/32"=1'-0"

JonesGillamRenz
730 N. Ninth
Salina, KS 67401
1881 Main Street, Suite 301
Kansas City, MO 64108
785.827.0386
jgr@jgrarchitects.com

THE RESIDENCE AT HERITAGE WEST

NEW SENIOR-LIVING FACILITY

ANDOVER, KANSAS

CHRISTOPHER R. GILLAM
ARCHITECT LICENSE
6979
1/3/2025
KANSAS
ARCHITECT

REVISION:

DATE: 1-3-2025
JOB: 24-3379
SHEET NO.:

A9.2

COPYRIGHTED ©

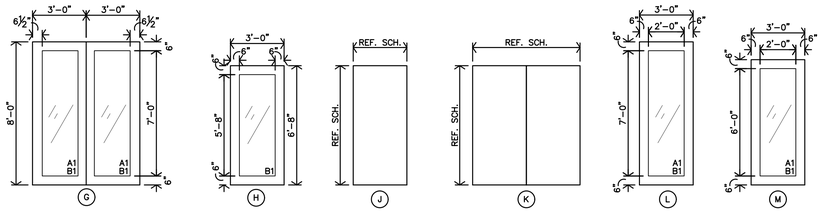

A PUBLIC DOOR TYPES

1/4"=1'-0"

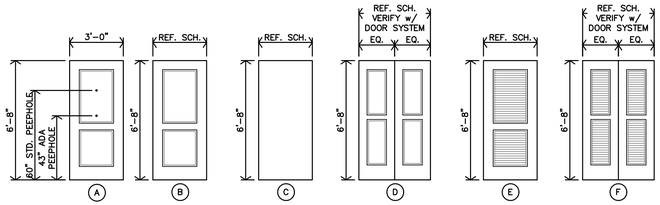

B UNIT DOOR TYPES

1/4"=1'-0"

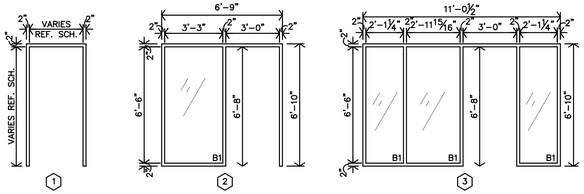

C DOOR FRAME TYPES

1/4"=1'-0"

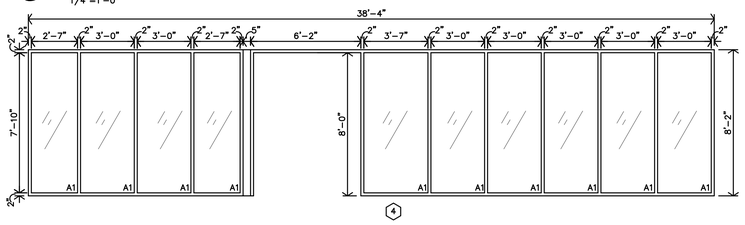

D DOOR FRAME TYPES

1/4"=1'-0"

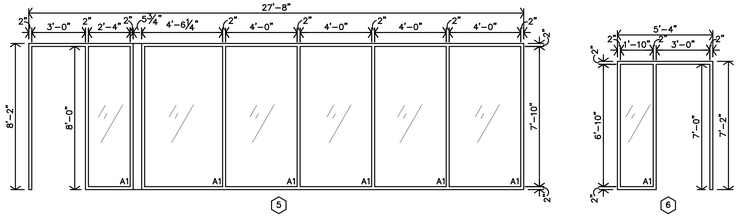

E DOOR FRAME TYPES

1/4"=1'-0"

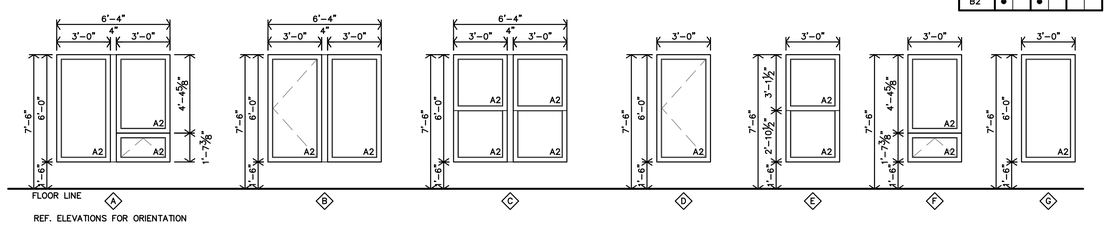

F WINDOW TYPES

1/4"=1'-0"

PUBLIC DOOR SCHEDULE

MARK	DOOR SIZE W	DOOR SIZE H	DOOR SIZE T	DOOR MATERIAL: ALUMINUM	DOOR MATERIAL: HOLLOW METAL	DOOR MATERIAL: S.C. WOOD	DOOR TYPE	DOOR FINISH: PREFINISHED	DOOR FINISH: PAINT	FRAME MATERIAL: ALUMINUM	FRAME MATERIAL: HOLLOW METAL	FRAME TYPE	FRAME FINISH: PREFINISHED	FRAME FINISH: PAINT	RATING	DETAILS	REMARKS
FIRST FLOOR																	
101	PR3'-0"	8'-0"		●			G	●		●			4	●			PANIC HARDWARE
102	3'-0"	6'-8"		●			H	●		●			2	●			
103	3'-0"	6'-8"	1 3/4"			●	J		●	●			1		●		
104	3'-0"	7'-0"	1 3/4"	●			H	●		●			3	●			
105	PR3'-0"	6'-8"	1 3/4"			●	K		●	●			1		●		
106	3'-0"	6'-0"	1 3/4"	●			L	●		●			5	●			
107	3'-0"	7'-0"	1 3/4"		●		J		●		●		1		●	90min	PANIC HARDWARE
108	3'-0"	7'-0"	1 3/4"	●			M	●		●			6		●		PANIC HARDWARE
109	3'-0"	6'-8"	1 3/4"			●	J		●		●		1		●		
111	3'-0"	7'-0"	1 3/4"	●			M	●		●			6		●		PANIC HARDWARE
112	3'-0"	7'-0"	1 3/4"		●		J		●		●		1		●	90min	PANIC HARDWARE
113	3'-0"	7'-0"	1 3/4"	●			M	●		●			6		●		PANIC HARDWARE
114	2'-0"	7'-0"	1 3/4"			●	J		●		●		1		●		
115	2'-0"	7'-0"	1 3/4"			●	J		●		●		1		●		
116	2'-0"	7'-0"	1 3/4"			●	J		●		●		1		●		
SECOND FLOOR																	
201	3'-0"	6'-8"	1 3/4"			●	J		●		●		1		●		
202	3'-0"	7'-0"	1 3/4"		●		J		●		●		1		●	90min	PANIC HARDWARE
203	3'-0"	7'-0"	1 3/4"		●		J		●		●		1		●	90min	PANIC HARDWARE
THIRD FLOOR																	
301	3'-0"	6'-8"	1 3/4"			●	J		●		●		1		●		
302	3'-0"	7'-0"	1 3/4"		●		J		●		●		1		●	90min	PANIC HARDWARE
303	3'-0"	7'-0"	1 3/4"		●		J		●		●		1		●	90min	PANIC HARDWARE
FOURTH FLOOR																	
401	3'-0"	6'-8"	1 3/4"			●	J		●		●		1		●		
402	3'-0"	7'-0"	1 3/4"		●		J		●		●		1		●	90min	PANIC HARDWARE
403	3'-0"	7'-0"	1 3/4"		●		J		●		●		1		●	90min	PANIC HARDWARE
404	3'-0"	6'-8"	1 3/4"	●			M	●		●			6		●		
ELEVATOR																	
E1	3'-6"	7'-0"			●			●			●			●		90min	REF. SHT. A6.4
E2	3'-6"	7'-0"			●			●			●			●		90min	REF. SHT. A6.4
E3	3'-6"	7'-0"			●			●			●			●		90min	REF. SHT. A6.4
E4	3'-6"	7'-0"			●			●			●			●		90min	REF. SHT. A6.4

NOTES:
1. ALL EXPOSED LINTELS TO BE PAINTED AT INTERIOR AND EXTERIOR.
2. CONTRACTOR MUST INSTALL MTL. FLASHINGS & CONT. CAULK FOR A WEATHER & WATERTIGHT CONDITIONS @ ALL EXTERIOR DOORS & DOOR FRAMES/UNITS.
3. ALUMINUM THRESHOLD EXPANSION JOINT COVER BETWEEN CONCRETE AND WOOD FLOOR.

UNIT DOOR SCHEDULE - 60 UNITS - REF. SHEETS A2.4-A2.8

MARK	DOOR SIZE W	DOOR SIZE H	DOOR SIZE T	DOOR MATERIAL: S.C. WOOD, PANEL	DOOR MATERIAL: H.C. WOOD, PANEL	DOOR MATERIAL: H.C. WOOD, LOUVER	DOOR TYPE	DOOR FINISH: BI-FOLD	DOOR FINISH: BI-PASS	DOOR FINISH: POCKET	DOOR FINISH: PREFINISHED	FRAME MATERIAL: PAINT	FRAME MATERIAL: WOOD	FRAME MATERIAL: METAL	FRAME TYPE	FRAME FINISH: PAINT	RATING	DETAILS	REMARKS	LOCATION
1	3'-0"	6'-8"	1 3/4"	●			A				●	●		●	1	●	20min		2, 3, 4	ENTRY
2	3'-0"	6'-8"	1 3/4"	●			B				●	●			1	●			1	BEDROOM
3	PR3'-0"	6'-8"	1 3/4"		●		C		●		●	●			1	●			6	CLOSET
4	(2)2'-0"	6'-8"	1 3/4"		●		D	●			●	●			1	●				CLOSET
5	3'-0"	6'-8"	1 3/4"			●	E				●	●			1	●				MECH./STOR.
6	(2)2'-0"	6'-8"	1 3/4"			●	F	●			●	●			1	●				MECH./STOR.

GENERAL NOTES:
A. ALL DOOR HARDWARE SHALL BE LEVER TYPE LATCH SETS UNLESS NOTED OTHERWISE.PROVIDED & INSTALLED PER SPECIFICATIONS SECTION 8710
B. COORDINATE W/ MFR. FOR ADA INSTALLATION REQUIREMENTS. COORDINATE KEYING REQUIREMENTS WITH OWNER.
C. UNDERCUT DOORS PER MECH DWGS.
D. CONTRACTOR TO REVIEW AND ENSURE THE FOLLOWING ITEMS AND STATUTES HAVE BEEN MET AS WELL.
http://codes.lp.findlaw.com/txstatutes/PR/8/92/D/92.153

SPECIFIC NOTES:
1. BEDROOM & BATH DOOR – HARDWARE TO BE PRIVACY LEVER TYPE LATCH SET.
2. ENTRY DOOR – HARDWARE TO BE LEVER TYPE LATCH SETS, KEYED OUTSIDE, RELEASE INSIDE AND DEADBOLT W/ THUMB TURN INSIDE, NO KEY OUTSIDE W/ 1" MIN THROW. COORDINATE W/ MFR. FOR ADA INSTALLATION REQUIREMENTS. COORDINATE KEYING REQUIREMENTS WITH OWNER.
3. ENTRY DOOR – 180° PEEP HOLES at ADAPTABLE UNITS: (1) PEEP HOLE TO BE INSTALLED @ 60"AFF.
4. ENTRY DOOR – 180° PEEP HOLES at ACCESSIBLE UNITS: (2) PEEP HOLES TO BE INSTALLED @ 43"AFF & 60"AFF.
5. BI-PASS/BI-FOLD DOORS – VERIFY OPENING w/ SIZE OF DOOR HARDWARE.

GLAZING SCHEDULE

MARK	INTERIOR	EXTERIOR	1/4"	3/4" INSULATED	TINTED	TEMPERED
A1		●		●	●	●
A2		●		●	●	
B1	●		●			●
B2	●		●			

WINDOW SCHEDULE

MARK	WIDTH	HEIGHT	STYLE	QUANTITY	INTERIOR	EXTERIOR	DETAILS
A	6'-4"	6'-0"	VINYL – FIXED & AWNING VENT			●	
B	6'-4"	6'-0"	VINYL – CASEMENT & FIXED			●	
C	6'-4"	6'-0"	VINYL – (2)SINGLE HUNG			●	
D	3'-0"	6'-0"	VINYL – CASEMENT			●	
E	3'-0"	6'-0"	VINYL – SINGLE HUNG			●	
F	3'-0"	6'-0"	VINYL – AWNING VENT			●	
G	3'-0"	6'-0"	VINYL – FIXED			●	

NOTES:
1. CONTRACTOR MUST INSTALL MTL. FLASHINGS & CONT. CAULK FOR A WEATHER & WATERTIGHT CONDITIONS @ ALL EXTERIOR WINDOW UNITS.
2. CONTRACTOR MUST INSTALL 1/4" INSUL. OR THERMAL BREAK. CONTINUOUS AROUND WINDOW.
3. CONTRACTOR TO PROVIDE & INSTALL MANUFACTURERS COORDINATING PANNING SYSTEM FOR ALUM. WINDOWS.
4. ALL SECOND FLOOR WINDOWS AND OPERABLE WINDOWS W/ THE SILL 6'-0" ABOVE GRADE, SHALL BE PROVIDE W/ WINDOW OPENING CONTROL DEVICE PER ASTM 2090 & 2012
5. IBC SEC. 1015.8.1
6. PROVIDE & INSTALL SAFETY GLASS AT HAZARDOUS LOCATIONS, PER 2018 IBC CODE 2406. IN DOORS, ADJACENT & WITHIN 24" TO DOORS, LESS THAN 18" ABV FLOOR, IN GUARDS & HANDRAILS, ADJACENT TO STAIRS AND RAMPS, STAIRS AND RAMPS.
7. EMERGENCY ESCAPE & RESCUE: PER 2012 IBC SEC. 1030. 20"w X 24"h MIN. OPENINGS, 5.7sf MIN. AREA (ALSO REF. 1030.4)

Wichita-Sedgwick County
Metropolitan Area Building
and Construction Department

REVIEWED FOR CODE COMPLIANCE

CORRECTIONS OR COMMENTS MADE ON THESE DRAWINGS AND THIS DOCUMENT DURING THIS REVIEW DO NOT RELIEVE CONTRACTOR FROM COMPLIANCE WITH ALL REQUIREMENTS OF THE CODE OF THE MARCH. THE CITY OF WICHITA OR SEDGWICK COUNTY. THIS REVIEW IS ONLY FOR GENERAL CONFORMANCE OF THE CODE. THE CONTRACTOR IS RESPONSIBLE FOR CONFORMING AND CORRELATING ALL TECHNIQUES OF CONSTRUCTION. THIS APPROVAL IS SUBJECT TO PROVISIONS OF SECTION 107.4 OF THE 2012 INTERNATIONAL BUILDING CODE.

DATE: 02/19/25 BY: William Jerauld Jr

PUBLIC FINISH SCHEDULE

REF. INTERIOR DESIGN PACKAGE

NO.	DESCRIPTION	FLOOR	BASE	N.WALL	E.WALL	S.WALL	W.WALL	CEILING	REMARKS
FIRST FLOOR									
101	COMMUNITY ROOM								
102	LEASING OFFICE								
103	TOILET								
104	FITNESS								
105	MECH								
106	HALL								
107	HALL								
108	HALL								
109	MECH								
SECOND FLOOR									
201	MECH								
202	HALL								
203	HALL								
THIRD FLOOR									
301	MECH								
302	HALL								
303	HALL								
FOURTH FLOOR									
401	MECH								
402	HALL								
403	HALL								
STAIR & ELEVATOR									
E1	ELEVATOR								
S1	STAIR								
S2	STAIR								

PUBLIC FINISH SCHEDULE - REF. INTERIOR DESIGN PACKAGE

FINISH SCHEDULE NOTES

GENERAL NOTES:
A. INSTALL VINYL, RUBBER, OR ALUMINUM TRANSITION STRIP BETWEEN FLOOR MATERIAL OF DIFFERING HEIGHTS, INCLUDING BUT NOT LIMITED TO CONCRETE/VCT TRANSITIONS.
B. ALL GYPSUM BOARD AREAS WHICH ARE ACCESSORIES TO THE ROOM INCLUDING BUT NOT LIMITED TO SOFFITS, BULKHEADS, TRIM, ETC. SHALL BE PAINTED REGARDLESS OF WHETHER IT IS SPECIFICALLY INDICATED PER SCHEDULE.
C. ALL G.B. WALLS & PERMANENT PARTITIONS SHALL RECEIVE RUBBER BASE UNLESS NOTED OTHERWISE.
D. WALL TYPE SHOWN FOR GENERAL INFORMATION ONLY. CONTRACTOR SHALL COORDINATE WALL MATERIAL W/ DRAWINGS AND FIELD CONDITIONS. ALL AREAS INDICATED TO RECEIVE NEW FINISH SHALL RECEIVE COMPLETE FINISH AS SCHEDULED AT ENTIRE ROOM. CONTRACTOR SHALL COORDINATE FINISHES AND ACCENTS WITH DETAILS AND INTERIOR ELEVATIONS.
E. FLOORING CONTRACTOR SHALL VERIFY THAT SUBFLOOR IS LEVEL AND PROPERLY PREPPED PRIOR TO INSTALLATION OF ANY FLOORING MATERIALS.
F. CONTRACTOR SHALL VERIFY THAT FLOORS ARE PREPPED/"FLOORSTONED" FOR LEVEL TRANSITION BETWEEN DIFFERING MATERIALS.
G. INSTALL PAINTABLE SILICONE SEALANT AT ALL G.B. TO CMU AND G.B. TO CONCRETE WALL TRANSITIONS.
H. ALL CONTROL JOINTS AT EXPOSED CONCRETE FLOORS SHALL RECEIVE SEALANT COMPATIBLE W/ FLOOR SEALER.
I. ALL H.M. DOORS & FRAMES TO BE PAINTED W/ INDUSTRIAL ENAMEL UNLESS NOTED OTHERWISE. H.M. DOORS AND FRAMES SHALL BE SANDED SMOOTH PRIOR TO PAINTING. SPRAY FINISH ONLY – NO BRUSH FINISH. CONTRACTOR SHALL
J. COORDINATE WITH INTERIOR ELEVATIONS, FLOOR PLANS AND MISCELLANEOUS DETAILS TO VERIFY ALL AESTHETIC ACCENTS AND DETAILS.
K. REFERENCE INTERIOR ELEVATIONS, WALL SECTIONS AND DETAILS FOR WOOD BASE AND TRIM LOCATIONS.

SPECIFIC NOTES:
1. REFERENCE REFLECTED CEILING PLAN, COORDINATE LOCATION OF CEILING ACCENTS.
2. CARPET AT ALL LANDINGS. INSTALL RUBBER STAIR NOSING AT EACH RISER. EXTEND CARPET UP THE RISER BEHIND THE NOSING.
3. INSTALL FRP PANEL TO 4'-0" ABOVE MOP SINK AND EXTEND 1'-0" MINIMUM BEYOND EDGES OF SINK; CLASS "A" FIRE RESISTIVE MATERIAL.
4. LEVEL 4 FINISH WITH ORANGE PEEL TEXTURE AT ALL CEILINGS.
5. MULTIPLE WALL PAINT COLORS.
6. CERAMIC WALL TILE BEHIND DRINKING FOUNTAINS. REFERENCE INTERIOR ELEVATIONS.

UNIT FINISH SCHEDULE - 60 UNITS - REF. SHTS. A2.4-A2.5

REF. INTERIOR DESIGN PACKAGE

NO.	DESCRIPTION	FLOOR: CARPET	FLOOR: VINYL PLANK FLR'G TILE	FLOOR: SEALED CONCRETE	FLOOR: WOOD	BASE	N.WALL	E.WALL	S.WALL	W.WALL	CEILING	REMARKS
01	KITCHEN		VP		P		P		P		P	
02	LIVING ROOM		VP		P		P		P		P	
03	BATH		VP		P		P		P		P	
04	LAUNDRY		VP		P		P		P		P	
05	BEDROOM		VP		P		P		P		P	
06	CLOSET		VP		P		P		P		P	
07	BEDROOM		VP		P		P		P		P	
08	CLOSET		VP		P		P		P		P	
09	MECH		VP		P		P		P		P	
10	STORAGE		VP		P		P		P		P	

JonesGillamRenz
730 N. Ninth
Salina, KS 67401
1881 Main Street, Suite 301
Kansas City, MO 64108
785.827.0386
jgr@jgrarchitects.com

THE RESIDENCE AT HERITAGE WEST

NEW SENIOR-LIVING FACILITY

ANDOVER, KANSAS

CHRISTOPHER R. CLINKENBEARD
6979
1/3/2025
KANSAS
ARCHITECT

REVISION:

DATE: 1-3-2025
JOB: 24-3379
SHEET NO.:

A10.1

COPYRIGHTED ©

GENERAL NOTES - STRUCTURAL

1. The contractor shall verify dimensions and conditions before construction and notify the engineer of any discrepancies, inconsistencies, or difficulties affecting the work before proceeding.
2. The contractor shall coordinate all disciplines, verifying size and location of all openings, whether shown on structural drawings or not, as called for on architectural, mechanical, or electrical drawings. All conflicts, inconsistencies, or other difficulties affecting structural work shall be called to the architect or engineer's attention for direction before proceeding.
3. All design and construction work for this project shall conform to the requirements of the 2018 International Building Code, as amended by the City of Andover, Kansas.
4. These drawings are for this specific project and no other use is authorized.

5. Structural Design Load Criteria:
   - A. Dead Load:
     - Roofs = 20 psf
     - Rooftop Patio = 100 psf
   - B. Live Load:
     - Roofs = 25 psf
     - Floors = 40 psf
     - Maintenance Platform = 40 psf
     - Public = 100 psf
   - C. Snow:
     - Pg = 20 psf, Ce = 1.0
     - Pf = 14 psf, Ps = 14 psf, Pm = 20 sf
     - Is = 1.0, Ce = 1.0, CL = 1.0
     - Drift & unbalanced snow loads per ASCE/SEI 7-10
   - D. Lateral Loads:
     1.) Wind V = 115 mph, exposure B. GCpi = +/- 1.0B
     Design wind pressures to be used for the deisgn of exterior components and cladding materials on the designated zones of walls and roof structures shall be per Section 30.1 and Table 30.1-2 of ASCE/SEI 7-10. Tabulated pressures shall be multiplied by effective are reduction factors, exposure adjustment factors, and topographic factors where applicable.
     2.) Seismic - Ss = 0.105, S1 = 0.034, IE = 1.0
     Site Classification D (Assumed).
     Seismic Design Category B.
     Basic Seismic Force-Resisting System:
     A.) T- Light-Framed Walls with Shear Panels of All Other Materials
     R=2, Omega = 2 1/2, Cd = 2, V= 1.009W
   - E. This project is designed to resist the most critical effects resulting from the load combinations of section 1605.3 of the 2018 International Building Code.

6. Concrete:
   - A. All concrete for foundations (walls, grade beams, and footings) shall develop minimum ultimate compressive design strength of 3500 psi in 28 days, but not less than 500 pounds of cement shall be used per cubic yard of concrete regardless of strengths obtained, not over 6 gallons of water per 100 pounds of cement and not over 4 inches of slump.
   - B. All concrete for interior flat work shall develop minimum ultimate compressive design strength of 4000 psi in 28 days, but not less than 560 pounds of cement shall be used per cubic yard of concrete regardless of strengths obtained, not over 5 gallons of water per 100 pounds of cement and not over 4 inches of slump.
   - C. Concrete for exterior flatwork shall have a minimum design compressive strength of 4500 psi in 28 days, with not less than 560 pounds of cement per cubic yard of concrete, not over 5 gallons of water per 100 pounds of cement, with 6% +/- 1% air entrainment, and a maximum of 4 inches of slump.
   - D. The preceding minimum mix requirements may have water-reducing admixtures conforming to ASTM C494 added to the mix at manufacturer's dosage rates for improved workability.
   - E. The preceding minimum mix requirements may have up to 15% maximum of the cement content replaced with an approved ASTM C618 Class C fly ash, provided the total minimum cementitious content is not reduced.
   - F. All interior concrete slabs on grade shall be placed over 15 mil, Class A Vapor Barrier per ASTM E1745 with less than 0.01 perms, tested after mandatory conditioning. All joints shall be lapped and sealed per manufacturer's recommendations. All penetrations, as well as damaged vapor barrier material shall also be sealed per manufacturer's recommendation prior to concrete placement. Install barrier per manufacturer recommended details at all discontinuous edges (at interior columns, exterior edge of slab, etc.) to ensure terms of warranty are followed. The vapor barrier shall be placed over free-draining granular material as prescribed by the project soils report.
   - G. All concrete is reinforced concrete unless specifically called out as unreinforced. Reinforce all concrete not otherwise shown with same steel as in similar sections or areas. Any details not shown shall be detailed per ACI 315 and meet requirements of ACI 318, current editions.
   - H. Contractor shall verify that all concrete inserts, reinforcing and embedded items are correctly located and rigidly secured prior to concrete placement.
   - I. Construction joints in beams, slabs, and grade beams shall occur at midspan (middle third) unless noted otherwise. Provide 2 x 4 horizontal keys at construction joints for shear transfer.
   - J. No aluminum items shall be embedded in any concrete.

7. Reinforcing Steel:
   - A. All reinforcing steel shall conform to the requirements of ASTM A615 or A706 grade 60 steel. Welded plain wire fabric shall be supplied in sheets and conform to the requirements of ASTM A185.
   - B. Clear minimum coverage of concrete over reinforcing steel shall be as follows:
     - Concrete placed against earth 3"
     - Formed concrete against earth 2"
     - Slabs 1"
     - Other 2"

     All coverage shall be nominal bar diameter minimum.
   - C. All dowels shall be the same size and spacing as adjoining main bars (splice lap 48 bar diameters or 30" minimum unless noted otherwise).
   - D. At corners of all walls, beams, and grade beams supply corner bars (minimum 2'-6" in each direction or 48 bar diameters) in outside face of wall, matching size and spacing of horizontal bars. Where there are no vertical bars in outside face of wall, supply 3 - #4 vertical support bars for corner bars.
   - E. Bars marked continuous shall be lapped 48 bar diameters (3'-0" minimum) at splices and embedments, unless shown otherwise. Splice top bars near midspan and splice bottom bars over supports, unless noted otherwise.
   - F. Accessories shall be as specified in latest edition of the ACI Detailing Handbook and the concrete Reinforcing Steel Institute Design Handbook. Maximum accessory spacing shall be 4'-0" on center, and all accessories on exposed surfaces are to have plastic coated feet.
   - G. All slabs and stairs not shown otherwise shall be 6" thick with #4 bars at 12" on center each way.

8. Structural Steel:
   - A. All structural steel beams and columns shall be ASTM A992, grade 50 steel and all miscellaneous steel shall be ASTM A36 grade steel. Hollow Structural Sections (HSS) shall be ASTM A500, grade B. Fabrication and erection shall be in accordance with AISC 303-05 "Code of Standard Practice for Steel Buildings and Bridges" in the 13th Edition of the AISC Steel Construction Manual.
   - B. All welding shall conform to the recommendations of the AWS.
   - C. All bolts not otherwise specified shall be 3/4" diameter high strength (ASTM A325-N). All bolts shall be fully pretensioned. All beam connections shall be designed per the AISC Manual of Steel Construction "Framed Beam Connections" for 40 kip reactions, and, shall account for eccentricity when the bolt line is more than 2" from the center of the support. All connections must be two bolt minimum.
   - D. All anchor bolts shall be 3/4" diameter, ASTM F1554, Grade 36 unless noted otherwise.

9. Foundations:
   - A. The soil investigation was prepared by Terracon, the report number is 01245160 and their telephone number is 913-492-7777.
   - B. Spread footings and continuous wall footings are designed to bear on soil capable of safely sustaining 2500 psf.
   - C. Contractor shall provide for dewatering at excavations from either surface water or seepage.
   - D. All foundation excavations shall be inspected by a qualified soil engineer, approved by the architect and/or structural engineer, prior to placement of steel or concrete. This inspection shall be at the owner's expense.
   - E. Moisture content in soils beneath building locations should not be allowed to change after footing excavations and after grading for slabs on grade are completed. If subgrade materials become desiccated or softened by water or other conditions, recompact materials to the density and water content specified for engineered fill. Do not place concrete on frozen ground.

10. Concrete Block Masonry
    - A. Concrete block used in exterior walls or load bearing walls shall meet the requirements of ASTM C90 and have a minimum net compressive strength of 2150 psi and laid up using type N mortar such that f'm equals 1500 psi. Mortar shall be volume proportion based cement lime mortar. Proportioning shall be completed by box measure. Any block in contact with earth shall be normal weight units, laid using type "S" mortar and grouted solid.
    - B. The contractor shall provide adequate temporary bracing for all masonry walls during construction.
    - C. All concrete block shall have 9 gage (or larger) horizontal joint reinforcing (ladder or truss) per architectural drawings and specifications (16" maximum vertical spacing).
    - D. Concrete block shall be reinforced as follows in 8" walls unless noted otherwise:
      - 1.) Vertical reinforcing shall be a minimum of 1 - #4 bar in 8" walls at 4'-0" on center, at each corner, at each door and window jamb, each side of control joints and in the end void of each length of wall. Lap splices for masonry vertical reinforcing shall be 48 bar diameters or 24" minimum.
      - 2.) Horizontal reinforcing:
        - A) Horizontal joint reinforcing as noted above.
        - B) Continuous horizontal bars shall be included per section or detail in bond beam or optional running bond beam where noted. Where bond beams are continuous at corners of walls, supply corner bars matching size of horizontal bars (minimum 2'-0" or 40 bar diameters in each direction).
    - E. Grout, where noted above, shall have a minimum design ultimate compressive strength of 2500 psi at 28 day test and 3/8" maximum aggregate size.
    - F. Lintels over all openings in walls not otherwise covered shall be an 8" x 8" bond beam with 2 - #6 bars in the bottom of the bond beam.

11. Post-Installed Anchors:
    - A. Post-installed anchors shall be used only where specified on the drawings unless approved in writing by the engineer of record. See drawings for anchor diameter, spacing and embedment. Performance values of the anchors shall be obtained for specified products using appropriate design procedures and/or standards as required by the governing building code. Anchors installed in concrete shall have an ICC-ES Evaluation Service Report. Special inspection is required for all post-installed anchors.
    - B. Mechanical anchors used in cracked and uncracked concrete shall have been tested and qualified for use in accordance with ACI 355.2 and ICC-ES AC193. All anchors shall be installed per the anchor manufacturer's written instructions.
    - C. Adhesive anchors used in cracked and uncracked concrete shall have been tested and qualified for use in accordance with ICC-ES AC308. All anchors shall be installed per the anchor manufacturer's written instructions.

12. Timber and Wood Framing:
    - A. Quality and construction of wood framing members and their fasteners for load supporting purposes not otherwise indicated on the drawings shall be in accordance with the 2018 International Building Code.
    - B. All studs and top and bottom plates shall be Douglas Fir No. 2 grade visually graded lumber, with an allowable fiber stress in bending of 900 psi minimum and an elastic modulus of 1,600,000 psi unless noted otherwise. All joist, truss members and headers to be No. 2 grade (min.) (unless noted otherwise).
    - C. Bridging of stud bearing walls and shear walls shall be solid, matching sheathing joints.
    - D. Joist blocking and bridging shall be solid wood or cross bridging of either wood or metal straps. Spacing, in any case, shall not exceed 8'-0".
    - E. Wood members and sheathing shall be fastened with number and size of fasteners not less than that set forth in Table 2304.9.1 of the 2018 International Building Code. Floor sheathing shall be APA rated tongue and groove Sturd-I-Floor, exposure 1, glued and nailed with 10d nails or #10 screws at 6" on center to supports at edges and 12" on center field. Sheathing of shear walls or roof diaphragms shall be edge nailed with 8d common nails at 6" on center and nailed to intermediate framing and/or blocking members with 8d common nails at 12" on center unless otherwise noted on the drawings.
    - F. Sill plates shall be bolted to concrete slabs with ½" diameter bolts at 32" on center (UNO, Re: shearwall sched). Provide plate washers at sill plate anchors for shearwalls per shearwall sched. Plates in direct contact with concrete or masonry shall be treated lumber.
    - G. All hangers, ties and connections shown are based on Simpson Strong Tie as the basis of design, provide Simpson Strong Tie or an approved equal. Joist hangers shall be equal to "LUS" for wood application and "LB" for steel weld-on application. Roof truss ties shall be equal to "H2.5A" and tie the roof truss to the top plate (provide (2) "H2.5A" Diagonally across from each other when uplift load shown in truss shop submittal exceeds 600lbs). Roof girder ties shall be equal to a "LGT2", "LGT3" or "LGT4" tie (dependent on number of plies) and tie the truss girder to the top plate. Provide "H4" at the top of each stud to top track when the top track has roof truss attached.
    - H. Service condition - dry with moisture content at or below 19% in service.
    - I. Laminated strand lumber (LSL) shall have an allowable flexural stress (Fb) of 1,700 psi (reduced by size factor) and an elastic modulus (E) of 1,300,000 psi.
    - J. Laminated veneer lumber (LVL) shall have an allowable flexural stress (Fb) of 2,600 psi (reduced by size factor) and an elastic modulus (E) of 1,400,000 psi.
    - K. Parallel Strand Lumber (PSL) shall have an allowable flexural stress (Fb) of 2,900 psi (reduced by size factor) and an elastic modulus (E) of 2,000,000 psi. (E) x 2,200,000 psi for members > 18').
    - L. Pre-engineered wood trusses shall be designed in accordance with the Truss Plate Institute's national design standard for metal-plate connected wood truss construction (ANSI/TPI-1 latest edition). Trusses shall be designed and manufactured by an authorized member of the Wood Truss Council of America (WTCA). Truss design shall conform to specified codes, allowable stress increases, deflection limitations and other applicable criteria of the governing code.
    - M. Truss shop drawings showing complete erection and fabrication details and calculations (including connections) shall be submitted to the project architect / engineer for review prior to fabrication and/or erection. Calculations shall bear the seal of a professional engineer, registered in the state of the project location. Shop drawings shall also be submitted to the local government controlling agency when requested by that agency.
    - N. All trusses shall be securely braced both during erection and permanently, as indicated on the approved truss design drawings and in accordance with TPI's commentary and recommendations for handling, installing and bracing metal-plate connected wood trusses (HIB-91, booklet) and the latest edition of ANSI/TPI-1.
    - O. The truss manufacturer shall supply all hardware and fasteners for joining truss members together and fastening truss members to their supports. Metal connector plates shall be manufactured by a member of the Wood Truss Council of America (WTCA) and shall be 20 gauge minimum. Connector plates shall meet or exceed ASTM A653, grade 33, with ASTM A924 galvanized coating designation 060.
    - P. Provide truss space directly above and centered over HVAC closets. Refer to Architectural and MEP drawings for exact locations.
    - Q. Shipment, handling, and erection of trusses shall be by experienced, qualified persons and shall be performed in a manner so as not to endanger life or property. Apparent truss damage shall be reported to the truss manufacturer for evaluation prior to erection. Cutting or alteration of trusses is not permitted.
    - R. Pre-Engineered Floor Trusses Design Criteria:
      - Top Chord Dead Load = 30 psf
      - Top Chord Live Load = Per General Note 5B
      - Bottom Chord Dead Load = 10 psf
      - Live Load Deflection = L/480, ½" max)
      - Total Load Deflection = L/360
      - Refer to Sheet S2.4 for 4th floor roof & exterior deck load criteria.
    - S. Roof Truss Design criteria:
      - Top Chord Dead Load = 10 psf
      - Top Chord Live Load = 25 psf (Plus Rooftop Equipment)
      - Top Chord Snow Load = 20 psf or 14 psf plus Drift
      - Bottom Chord Dead Load = 10 psf
      - Bottom Chord Live Load = 5 psf
      - Live Load Deflection = L/360
      - Total Load Deflection = L/300
      - Refer to Sheet S2.4 for 4th floor roof & exterior deck load criteria.
    - T. Roof trusses shall be designed per IBC 2018 for net uplift resulting from wind loading as calculated using components and cladding loading.
    - U. Construction bracing shall be provided by the contractor as required to keep the building and studs plumb.
    - V. Structural members shall not be cut for pipes, etc., unless specifically detailed. Notching and boring of studs and top of plates shall conform to the provisions of section 2308.9.10 and 2308.9.11 of the IBC. Where top plates or sole plates are cut for pipes, a metal tension tie with minimum 0.058 inches thick and ½" inches wide shall be fastened to each plate across and to each side of the opening with not less than (6) 16d nails, in accordance section 2308.9.8 of the IBC.
    - W. All fasteners for wood to wood connections and wood connectors shall be as indicated in structural drawings or manufacturer literature to achieve full capacity of connector. Alternate fasteners may be submitted as a substitution request. Submittal must show that alternative fasteners will not reduce the capacity of the connection.

13. Shop Drawing Review:
    - A. Bob D. Campbell and Company, Inc. will review the General Contractor's (GC) shop drawings and related submittals (as indicated below) with respect to the ability of the detailed work, when complete, to be a properly functioning integral element of the overall structural system designed by Bob D. Campbell and Company, Inc.
    - B. Prior to submittal of a shop drawing or any related material to Bob D. Campbell and Company, Inc., the GC shall:
      - 1.) Review each submission for conformance with the means, methods, techniques, sequences and operations of construction and safety precautions and programs incidental thereto, all of which are the sole responsibility of the GC.
      - 2.) Review and approve each submission.
      - 3.) Stamp each submission as approved.
    - C. Bob D. Campbell and Company, Inc. shall assume that no submission comprises a variation unless the GC advises Bob D. Campbell and Company, Inc. with written documentation.
    - D. Shop drawings and related material (if any) required are indicated below. Should Bob D. Campbell and Company, Inc. require more than ten (10) working days to perform the review, Bob D. Campbell and Company, Inc. shall so notify the GC.
      - 1.) Concrete mix designs and material certificates including admixtures and compounds applied to the concrete after placement.
      - 2.) Reinforcing steel shop drawings including erection drawings, wall elevations (include all mech. openings) and bending details. Bar list will not be reviewed for correct quantities.
      - 3.) Structural steel shop drawings including erection drawings and piece details. Include connection submittals and miscellaneous framing.
      - 4.) Miscellaneous anchors shown on the structural drawings.
      - 5.) Wood truss design calculations and detailed erection and fabrication drawings. Standard stick framing shop drawings need not be submitted.
      - 6.) Construction and control joint plans and/or elevations.
    - E. Bob D. Campbell and Company, Inc. shall review shop drawings and related materials with comments provided that each submission has met the above requirements. Bob D. Campbell and Company, Inc. shall return without comment unrequired material or submissions without GC approval stamp.

14. Structural Special Inspection:
    - A. The structural design for this project is based on completion of special inspections during construction in accordance with chapter 17 of the 2018 International Building Code. The owner shall employ one or more qualified special inspectors to provide the required special inspections.
    - B. Special inspections shall be required for the items indicated below. The General Contractor shall provide notification to the inspector when items requiring inspection are ready to be inspected and provide access for those inspections.
      - 1.) Placement of Concrete
      - 2.) Testing of Concrete
      - 3.) Bolts in Concrete
      - 4.) Placement of Reinforcing Steel
      - 5.) Verification of Soil Bearing Capacities
      - 6.) High Strength Bolting
      - 7.) Drill & Epoxy Bolts
      - 8.) Structural Welding
      - 9.) Shear wall installation
      - 10.) Post-Installed Anchors
      - 11.) Wood shear walls and holdowns
      - 12.) Wood gravity framing and placement
    - C. The special inspector shall furnish inspection reports to the building official, owner, architect and structural engineer, and any other designated person.
    - D. All discrepancies shall be brought to the immediate attention of the contractor for correction, then, if incorrected, to the proper design authority, building official and structural engineer.
    - E. The special inspector shall submit a final signed report stating that the work requiring special inspection was, to the best of the inspector's knowledge, in conformance with the approved plans and specifications and the applicable workmanship provisions of the building code.

15. Copyright and Disclaimer:
    - A. All drawings in the structural set (S-series drawings) are the copyrighted work of Bob D. Campbell and company, Inc. These drawings may not be photographed, traced, or copies in any manner without the written permission of Bob D. Campbell and Company, Inc. Exception: Original drawings may be printed for distribution to the owner, architect, and general contractor for coordination, bidding, and construction. Subcontractors may not reproduce these drawings for any purpose or in any manner.
    - B. I, Michael J. Faltee, P.E., registered engineer and a representative of Bob D. Campbell and Company, Inc., do hereby accept professional responsibility as required by the professional registration laws of this state for the structural design drawings consisting of S-series drawings. I hereby disclaim responsibility for all other drawings in the construction document package, they being the responsibility of other design professionals whose seals and signed statements may appear elsewhere in the construction document package.

Wichita-Sedgwick County
Metropolitan Area Building
and Construction Department

REVIEWED FOR CODE COMPLIANCE

CORRECTIONS OR COMMENTS MADE ON THESE DRAWINGS AND THIS DOCUMENT DURING THIS REVIEW DO NOT RELIEVE CONTRACTOR FROM COMPLIANCE WITH ALL REQUIREMENTS OF THE CODE OF THE MABCD, THE CITY OF WICHITA OR SEDGWICK COUNTY. THIS REVIEW IS ONLY FOR GENERAL CONFORMANCE OF THE CODE. THE CONTRACTOR IS RESPONSIBLE FOR CONFORMING AND CORRELATING ALL TECHNIQUES OF CONSTRUCTION. THIS APPROVAL IS SUBJECT TO PROVISIONS OF SECTION 107.4 OF THE 2012 INTERNATIONAL BUILDING CODE.

DATE: 02/19/25 BY: William Jerauld Jr

NAILING SCHEDULE (REFER TO NOTES #1 and #2)

	CONNECTION	ATTACHMENTS (REF NOTE #3 and #4)	
1	JOIST TO SILL OR GIRDER	3- 3" x 0.131" NAILS-TOENAIL	3-8d NAILS-TOENAIL
2	BRIDGING TO JOIST	2- 3" x 0.131" NAILS-TOENAIL EACH END	2-8d NAILS-TOENAIL EACH END
3	SOLE PLATE TO JOIST OR BLOCKING & TRUSS TO TOP 'P.	3" x 0.131" NAILS AT 8"o.c.-TYPICAL FACE NAIL 4-3" x 0.131" NAILS AT 16"o.c.-BRACED WALL PANELS	16d BOX NAILS AT 16"o.c. MAX. FACE NAILING 3-16d BOX NAILS AT 16'o.c. BRACED WALL PANEL
4	TOP PLATE TO STUD	3- 3" x 0.131" NAILS-END NAIL	2-16d NAILS-END NAIL
5	STUD TO SOLE PLATE	4- 3" x 0.131" NAILS-TOENAIL OR 3- 3" x 0.131" NAILS-END NAIL	4-8d NAILS-TOENAIL OR 2-16d NAILS-END NAIL
6	DOUBLE STUDS	3" x 0.131" NAILS AT 8"o.c.-FACE NAIL	16d BOX NAILS AT 24"o.c. MAX. FACE NAIL
7	DOUBLED TOP PLATES	3" x 0.131" NAILS AT 12"o.c.-FACE NAIL	16d BOX NAILS AT 16"o.c. MAX. FACE NAIL
8	DOUBLE TOP PLATE LAPS AND INTERSECTIONS	12-3" x 0.131" NAILS	8-16d NAILS
9	BLOCKING BETWEEN JOISTS OR RAFTERS TO TOP PLATE	3-3" x 0.131" NAILS -TOENAIL	3-8d NAILS-TOENAIL
10	RIM JOIST TO TOP PLATE	3" x 0.131" NAILS AT 6"o.c.-TOENAIL	10d NAILS AT 6"o.c. MAX.-TOENAIL
11	TOP PLATE LAPS AND INTERSECTIONS	3- 3" x 0.131" NAILS-FACE NAIL	2-16d NAILS-FACE NAIL
12	CONTINUOUS HEADER, TWO PIECES	3" x 0.131" NAILS AT 10"o.c. ALONG EACH EDGE	16d NAILS AT 16"o.c. MAX. ALONG EACH EDGE-TOENAIL
13	CEILING JOISTS TO PLATE	5- 3" x 0.131" NAILS-TOENAIL	3-8d NAILS-TOENAIL
14	CONTINUOUS HEADER TO STUD	4- 3" x 0.131" NAILS-TOENAIL	4-8d NAILS-TOENAIL
15	CEILING JOISTS, LAPS OVER PARTITIONS	4- 3" x 0.131" NAILS-FACE NAIL	3-16d NAILS-FACE NAIL
16	CEILING JOISTS TO PARALLEL RAFTERS	4- 3" x 0.131" NAILS-FACE NAIL	3-16d NAILS-FACE NAIL
17	RAFTER TO PLATE	3- 3" x 0.131" NAILS-TOENAIL	3-8d NAILS-TOENAIL
18	1" BRACE TO EACH STUD AND PLATE	2- 3" x 0.131" NAILS-FACE NAIL	2-8d NAILS-FACE NAIL
19	BUILT-UP CORNER AND MULTIPLE STUDS	3" x 0.131" NAILS AT 16"o.c.	16d NAILS AT 24"o.c. MAX.
20	BUILT-UP GIRDER AND BEAMS	3" x 0.131" NAILS AT 24"o.c. FACE NAILED TOP AND BOTTOM STAGGERED ON OPPISITE SIDES 3- 3" x 0.131" NAILS AT ENDS AND EACH SPLICE	20d NAILS AT 32"o.c. MAX. TOP AND BOTTOM, STAGGERED ON OPPSITE SIDES. 2-20d NAILS AT ENDS AND EACH SPLICE
21	BUILT-UP LAMINATED VENEER LUMBER BEAMS	3" x 0.131" NAILS AT 6"o.c. TOP AND BOTTOM ALONG EDGE	16d NAILS AT 12"o.c. TOP AND BOTTOM ALONG EDGE
22	2" PLANKING	4- 3" x 0.131" NAILS AT EACH SUPPORT	16d NAILS AT EACH SUPPORT
23	RIM BOARD TO TRUSS	2 - 3" x 0.131" FACE NAILS (1T/1B @ EA TRUSS)	2-10d NAILS - FACE NAILS (1T/1B @ EA TRUSS)
24	BUILT-UP STUD PACK COLUMNS	REFER TO DETAIL 6/S1.1	REFER TO DETAIL 6/S1.1

NOTES:
1.) ALL NAILS SHALL BE AS NOTED UNLESS OTHERWISE SPECIFIED ON STRUCTURAL DRAWINGS OR ALTERNATE PROVIDED BY ENGINEER IN WRITING.
2.) CONDITIONS NOT SPECIFIED SHALL BE IN ACCORDANCE WITH CURRENT INTERNATIONAL BUILDING CODE.
3.) NAILING DESIGNATION:
4- 3" x 0.131" NAILS
- 4 = QUANTITY
- 3" = NAIL LENGTH
- 0.131" = DIAMETER IN INCHES

4.) ALL NAILS NOTED AS 8d, 10d, 16d, ETC. SHALL BE COMMON NAILS UNLESS NOTED BOX.
5.) REFER TO SHEARWALL SCHEDULE FOR ADDT'L NAILING REQUIREMENTS

TYPICAL SYMBOL LEGEND:
- (A) - BEAM OR HEADER PER SCHED ON S1.1
- (A-U) - UPSET BEAM OR HEADER PER SCHED ON S1.1
- (8) - FOOTING TYPE PER SCHED ON S1.1
- * - SHEARWALL HOLDDOWN TYPE PER SCHED ON S1.2
- SW - SHEARWALL PER SCHED ON S1.2
- CJ - CONSTRUCTION JOINT PER 2/S3.1
- SJ - SAW JOINT PER 1/S3.1
- ——→ - SPAN DIRECTION

BOB D. CAMPBELL & CO.
Structural Engineers Since 1957
4338 Belleview Ave. 816.531.4144
Kansas City, MO 64111 www.bdc-engrs.com

JonesGillamRenz
730 N. Ninth 1881 Main Street, Suite 301
Salina, KS 67401 Kansas City, MO 64108
785.827.0386 jgr@jgrarchitects.com

ANDOVER SENIOR LIVING
NEW APARTMENTS
ANDOVER, KANSAS

MICHAEL J. FALTEE — LICENSED — 10296 — 1-3-2025 — KANSAS PROFESSIONAL ENGINEER

REVISION:

DATE: 1-03-2025
JOB: 24-3385
SHEET NO.:

S1.0

COPYRIGHTED ©

HEADER SCHEDULE

MARK	HEADER	JAMB STUDS	NOTES
A	(2) 2x10 w/ ½" PLYWOOD SPACER ℘	2 JACK / 1 KING (2 KING BELOW 2nd FLR)	
B	(3) 2x10 w/ (2) ½" PLYWOOD SPACER ℘s	1 JACK / 1 KING	
C	(3) 2x10 w/ (2) ½" PLYWOOD SPACER ℘s	1 JACK / 2 KING	
D	(3) 2x10 w/ (2) ½" PLYWOOD SPACER ℘s	1 JACK / 3 KING	
E	(2) 2x10 UPSET	1 JACK, 1 KING	
F	(3) 2x12 UPSET	1 JACK / 1 KING	
G	(3) 1¾" x 9¼" LVLs	4 JACK	
H	(3) 1¾" x 11¼" LVLs	2 JACK / 1 KING	

NOTES:
1. JAMB STUDS SHALL MATCH SIZE & GRADE OF WALL STUDS UNO.
2. WHERE BEAM IS NOTED "UPSET", ALL JAMB STUDS NOTED WILL EXTEND TO DOUBLE TOP PLATE.
3. ALL EXTERIOR LUMBER TO BE TREATED.
4. PROVIDE SQUASH BLOCKS AT TRUSSES & BLOCKING FRAMING WHERE JAMBS OR STUD PACKS ARE DISCONT. QUANTITY TO MATCH JAMB OR STUD PACK ABOVE.
5. PROVIDE ½" PLYWOOD SPACER PLs AT HEADERS CONSTRUCTED WITH 2x LUMBER.
6. AT CONTRACTOR'S OPTION-PROVIDE GLULAM IN LIEU OF PSLs.
7. REFER TO DTL 5/S1.1 FOR MULTI-PLY MEMBER CONNECTION REQUIREMENTS.
8. ATTACH JAMB AND KING STUDS TOGETHER PER CONNECTION TYPE 24 IN NAILING SCHEDULE ON SHEET S1.0.
9. REFER TO DETAILS 7/S1.1 FOR TYPICAL HEADER CONDITIONS.

STUD BEARING WALL & SHEATHING SCHEDULE

LOCATION	STUD SIZE AND SPACING
(TYP.) EXTERIOR WALL	2x6 @ 16"oc STUDS
INTERIOR WALL (EXCEPT AT NON TRUSS BRG CORRIDORS)	REFER TO SECTIONS ON SHEET S3.2
INTERIOR WALL (AT NON TRUSS BRG CORRIDORS)	REFER TO SECTIONS ON SHEET S3.2

NOTES:
1. PROVIDE 2x BLOCKING @ MID HEIGHT (5'-0" MAX) @ ALL LOAD BEARING WALLS NOT SHEATHED ON BOTH SIDES AND ALL 2x8 WALLS.
2. ALL STUDS TO BE No. 2 GRADE U.N.O.
3. RE: 6/S1.1 FOR NAILING OF MULTIPLE STUDS.
4. REFER TO ARCH/MEP DRAWING FOR LOCATIONS OF FURRED OUT WALLS TO ACCOMMODATE PLUMBING OR MEP ITEMS.

STRUCTURAL DECK & SLAB SCHEDULE

MARK	DESCRIPTION
SOG-1	4" CONC. SLAB ATOP 15 MIL VAPOR BARRIER ATOP 4" GRAVEL ATOP 20" LOW VOLUME CHANGE MATERIALAS REQ'D BY PROJECT GEOTECH. REPORT. REINF. SLAB w/ 6x6-6/6 WWF. EL. T/C = 100'-0.
FD-1	3/4" PLYWOOD SHEATHING ATTACH w/ 8d NAILS @ 6"oc AT EDGES AND 12"oc AT FIELD.
RD-1	5/8" ZIP STRIP ROOF SHEATHING ATTACH w/ 8d NAILS @ 6"oc AT EDGES AND 12"oc AT FIELD.

NOTES:
1. SOG = SLAB-ON-GRADE TYPE
2. FD = FLOOR DECK TYPE
3. RD = ROOF DECK TYPE

SPREAD FOOTING SCHEDULE

MARK	SIZE	REINFORCING
4	4'-0"x4'-0"x1'-2" Dp	#4 @ 6"oc EACH WAY, BOTTOM
4A	4'-0"x4'-0"x3'-0" Dp	#5 @ 12"oc EACH WAY, BOTTOM
5	5'-0"x5'-0"x1'-4" Dp	#4 @ 6"oc EACH WAY, BOTTOM
5A	5'-0"x5'-0"x3'-0" Dp	#5 @ 12"oc EACH WAY, BOTTOM
6	6'-0"x6'-0"x1'-6" Dp	#4 @ 6"oc EACH WAY, BOTTOM

NOTES:
1. SPREAD FOOTINGS LOCATED AT INTERIOR SHALL BE POURED MONOLITHIC WITH THE SLAB AS A THICKENED PORTION OF SLAB UNLESS THEY HAVE A STEEL COLUMN BEARING ATOP.
2. SPREAD FOOTINGS LOCATED AT INTERIOR WITH STEEL COLUMNS BEARING ATOP SHALL BE LOCATED AT 99'-2".
3. SPREAD FOOTINGS LOCATED AT PERIMETER (EXTERIOR) OF BUILDING SHALL BE POURED MONOLITHIC WITH GRADE BEAMS

Wichita-Sedgwick County
Metropolitan Area Building
and Construction Department

REVIEWED FOR CODE COMPLIANCE

CORRECTIONS OR COMMENTS MADE ON THESE DRAWINGS AND THIS DOCUMENT DURING THIS REVIEW DO NOT RELIEVE CONTRACTOR FROM COMPLIANCE WITH ALL REQUIREMENTS OF THE CODE OF THE MABCD, THE CITY OF WICHITA OR SEDGWICK COUNTY. THIS REVIEW IS ONLY FOR GENERAL CONFORMANCE OF THE CODE. THE CONTRACTOR IS RESPONSIBLE FOR CONFORMING AND CORRELATING ALL TECHNIQUES OF CONSTRUCTION. THIS APPROVAL IS SUBJECT TO PROVISIONS OF SECTION 107.4 OF THE 2012 INTERNATIONAL BUILDING CODE.

DATE: 02/19/25 BY: William Jerauld Jr

COLUMN SCHEDULE

TYPE	SIZE	BASE ℘	SHAPE	ANCHOR BOLTS
C1	HSS3½x3½x5/16	1/2"x10"x10"	A	(2) ¾"Φ x 2'-0"Lg
C2	HSS5x5x¼	1/2"x5½"x13"	B	(4) ¾"Φ x 2'-0"Lg

NOTES:
1. SEE PLAN FOR ORIENTATION OF COLUMNS.
2. ALL COLUMNS SHALL BE CONTINUOUS WITH NO SPLICES.
3. AB LENGTH INCLUDES 4" HK & 4" PROJECTION U.N.O.
4. U.N.O. SET COLUMN BASE PLATES ON 1" GROUT TYPICAL.
5. EACH AB SHALL HAVE A 3"x3"x¾" PLATE WASHER BOT. (IN LIEU OF HK) @ 4" PROJ. ATOP WHERE NOTED IN THE SCHED. (4"x4"x¾" PLATE WASHER @ BOLTS 1"Φ AND LARGER).
6. ¾"Φ ANCHOR BOLTS SHALL HAVE A 2"x2"x¼" PLATE WASHER @ TOP & 1"Φ ANCHOR BOLTS SHALL HAVE A 3"x3"x⅜" PLATE WASHER. WELD WASHER TO COLUMN BASE PLATE WITH ⅛" FILLET WELD @ 4- SIDES.
7. ALL ANCHOR BOLTS SHALL BE ASTM F1554, GRADE 36 U.N.O.

SHAPE (NOT TO SCALE)

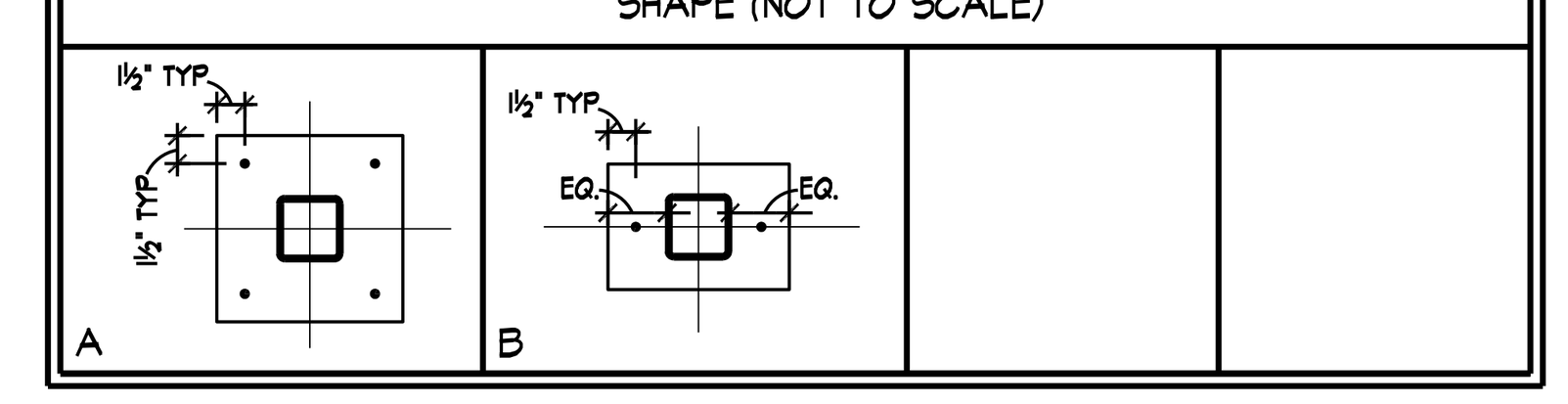

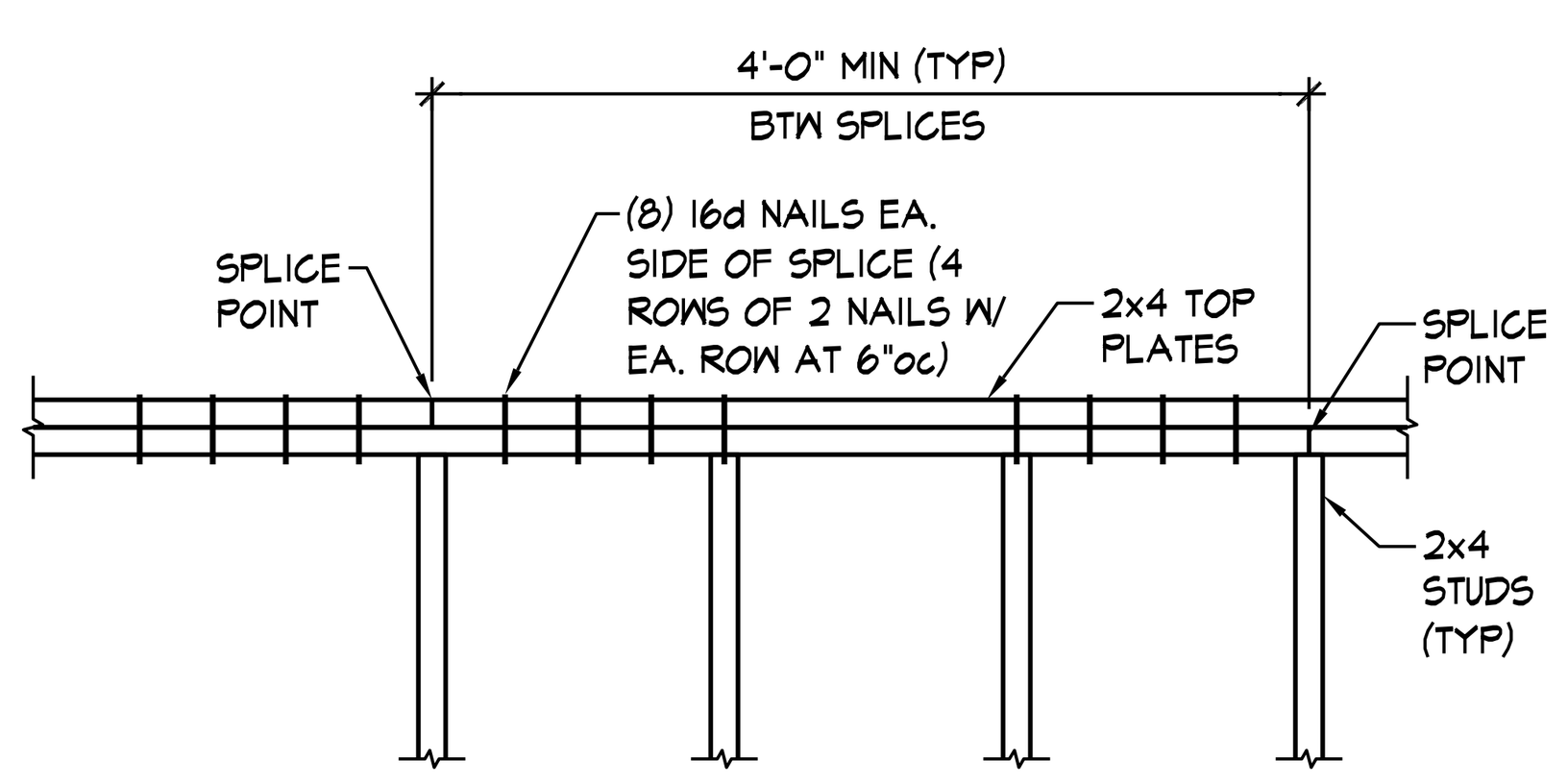

(TYP) TOP PLATE SLPICE (1/S1.1)
¾" = 1'-0"

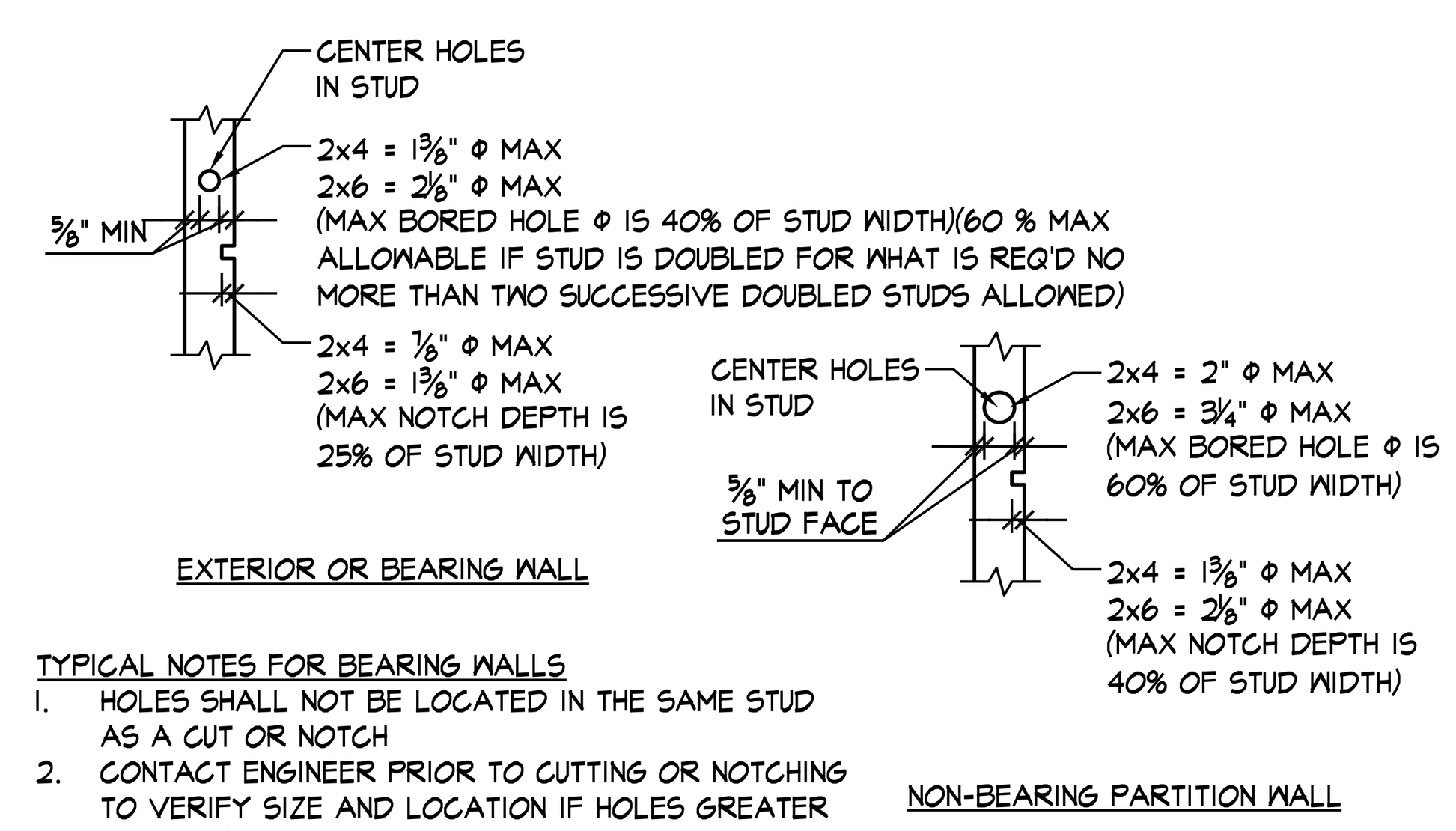

TYPICAL NOTES FOR BEARING WALLS
1. HOLES SHALL NOT BE LOCATED IN THE SAME STUD AS A CUT OR NOTCH
2. CONTACT ENGINEER PRIOR TO CUTTING OR NOTCHING TO VERIFY SIZE AND LOCATION IF HOLES GREATER THAN 20% STUD WIDTH OR NOTCHES GREATER THAN 10% STUD WIDTH ARE REQUIRED IN TWO OR MORE CONSECUTIVE STUDS
3. NOTCHES OR HOLES NOT PERMITTED IN JAMBS, STUD PACKS AND AT ENDS OF SHEARWALLS

SECTION (2/S1.1)
¾" = 1'-0"

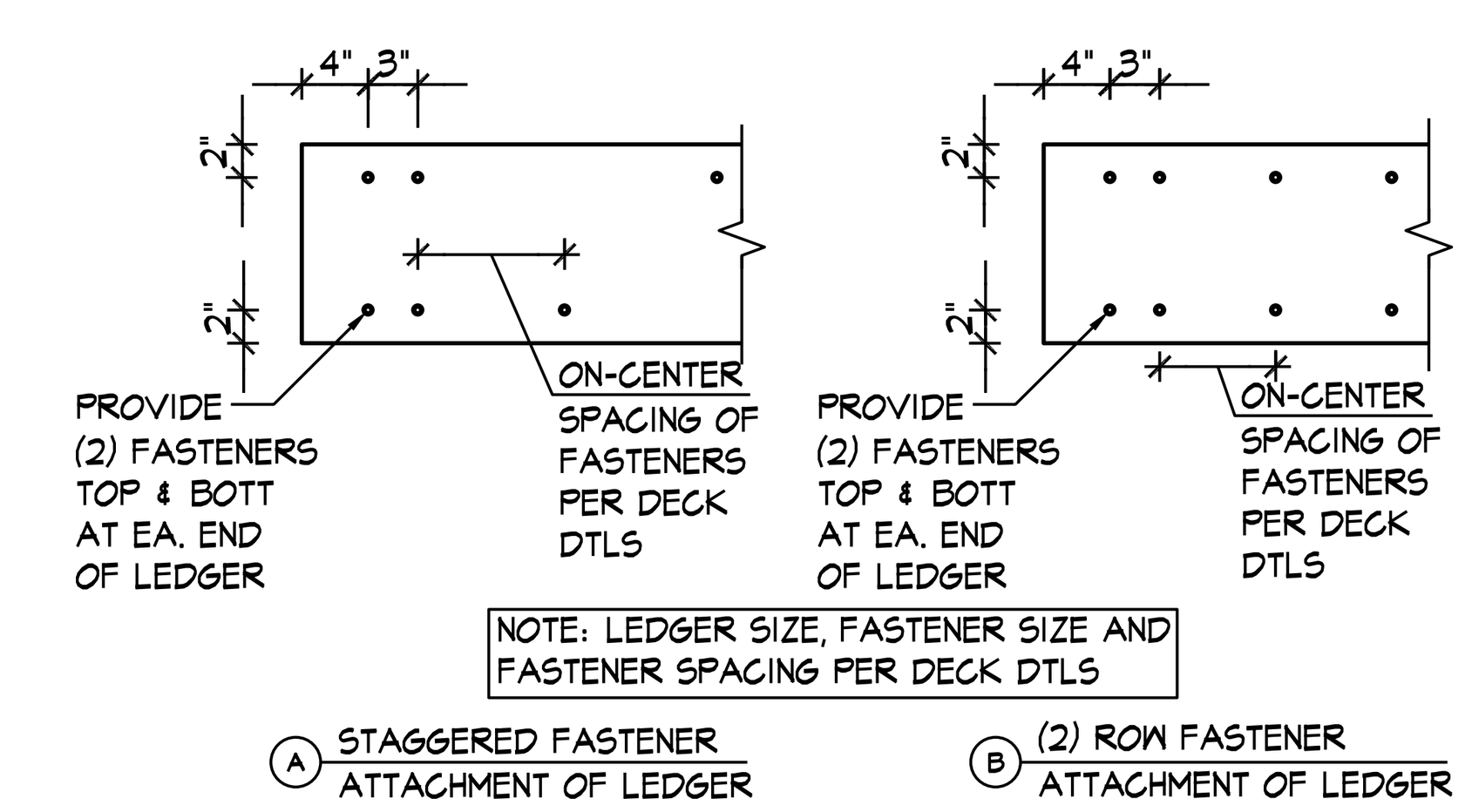

TYPICAL LEDGER CONNECTION (3/S1.1)
¾" = 1'-0"

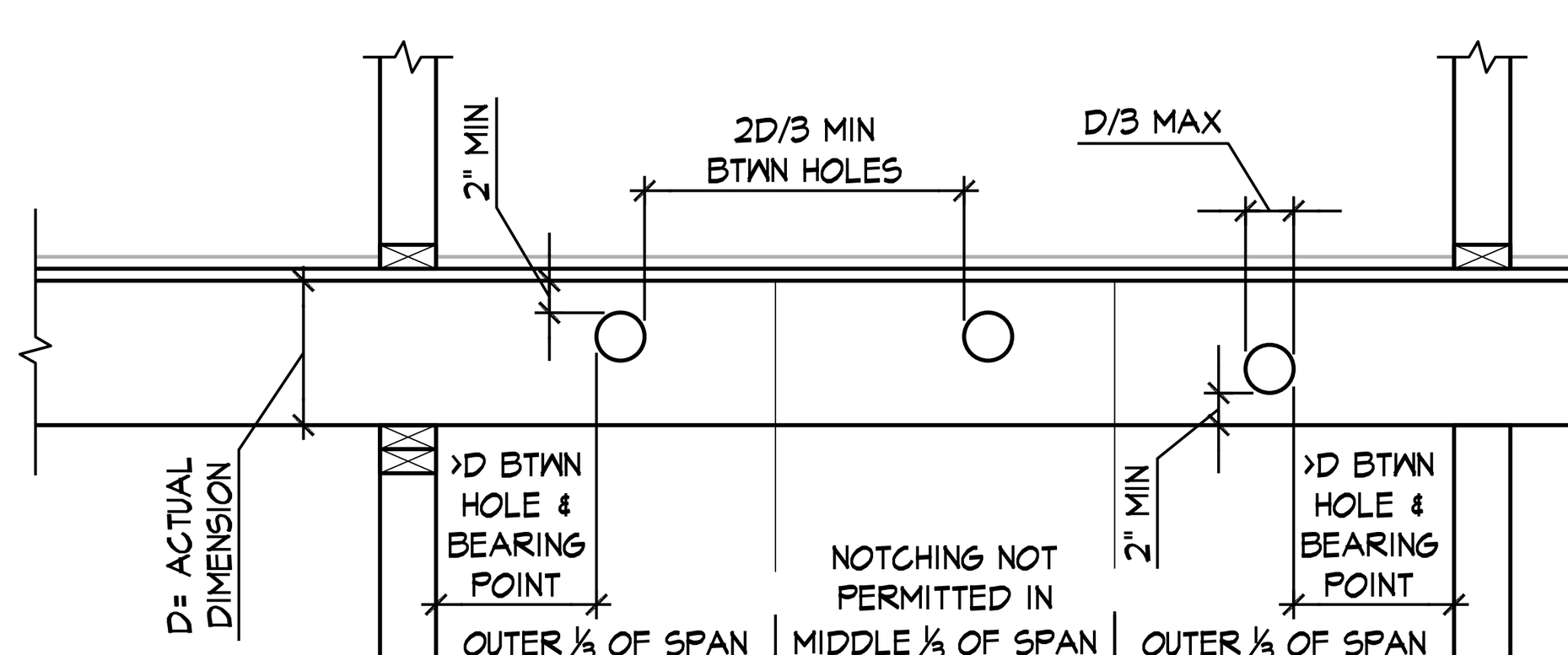

NOTE:
1. CONTACT ARCHITECT PRIOR TO CUTTING JOISTS TO VERIFY SIZE AND LOCATION
2. DETAIL APPLIES TO 2x FRAMING ONLY. REFER TO ENGINEERED OR COMPOSITE LUMBER MANUNFACTURER'S RECOMMENDATIONS AT PSLs, LVLs, LSLs & GLULAM

SECTION (4/S1.1)
¾" = 1'-0"

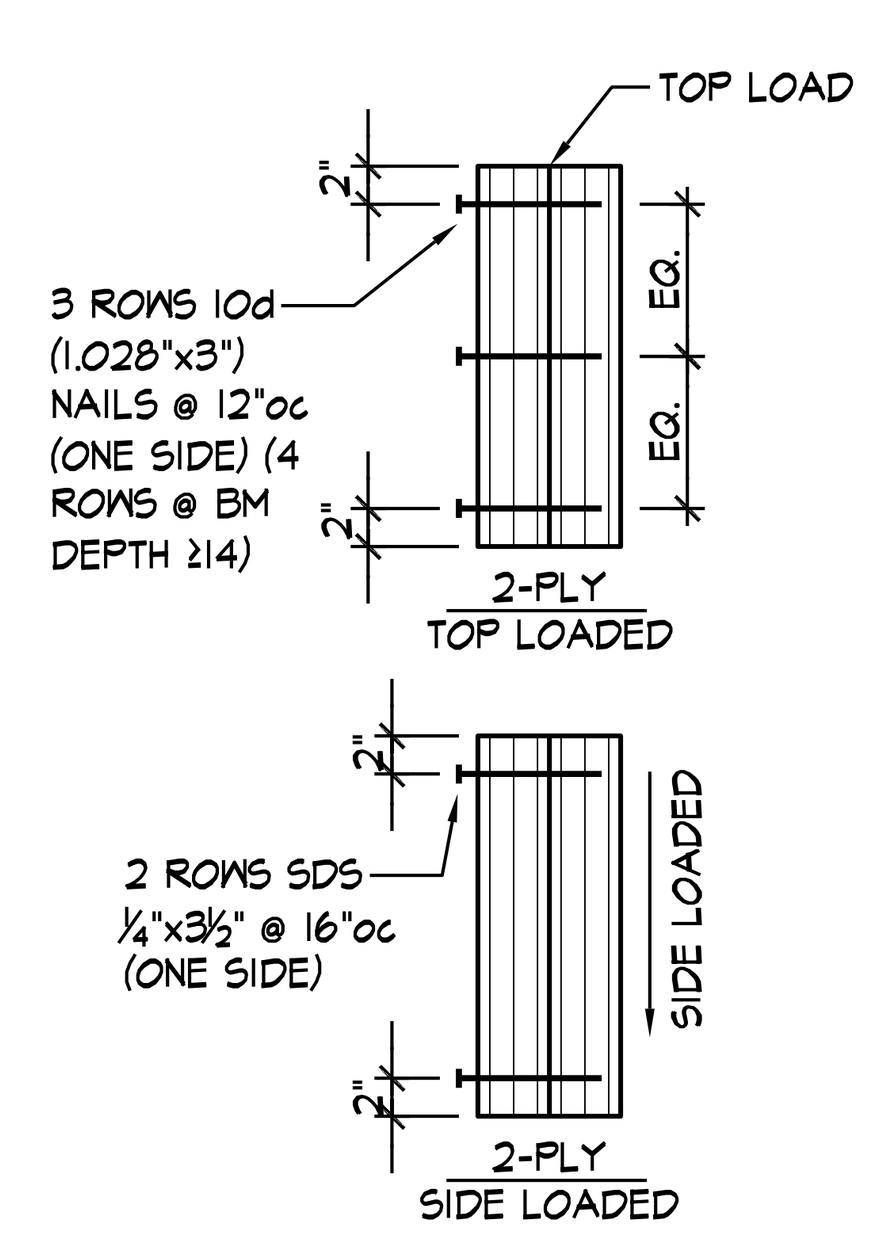

TYPICAL MULTI-PLY BEAM CONNECTION (5/S1.1)
¾" = 1'-0"

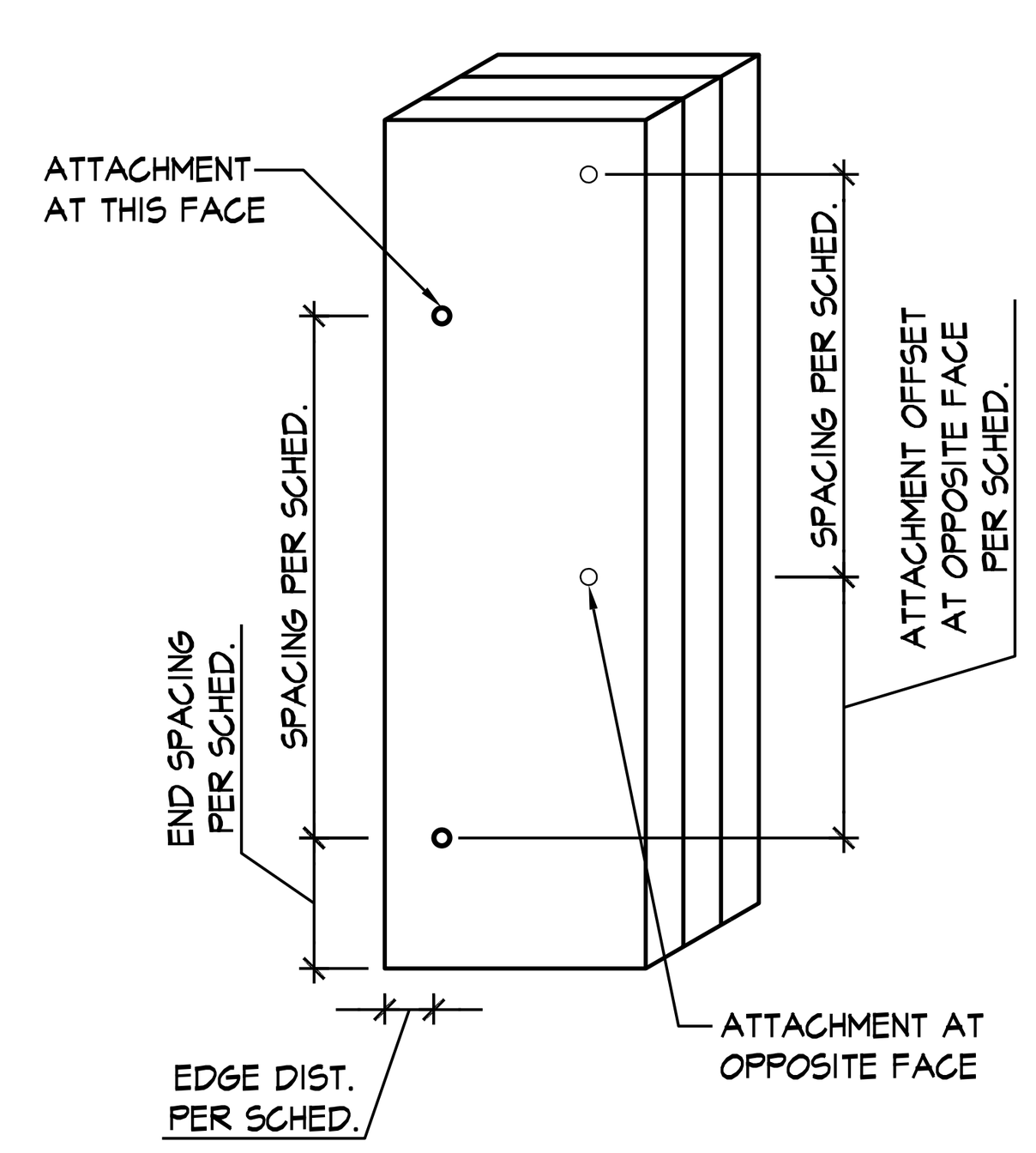

TYPICAL MULTI-PLY STUD CONNECTION (6/S1.1)
1½" = 1'-0"

BUILT-UP STUD PACK COLUMN ATTACHMENT SCHEDULE

NUMBER OF PLIES	ATTACHMENT AT COLUMN STUD PACKS SUPPORTING BEAMS	ATTACHMENT AT WALL STUD PACKS SUPPORTING TRUSSES
2-PLY MEMBERS	8d NAILS AT 12"oc, 1" FROM EDGE, W/ OPPOSITE EDGE NAILED FROM OPPOSITE SIDE OFFSET 6", @ 12"oc W/ FIRST NAIL 2" FROM EA. END	8d NAILS AT 12"oc, 1" FROM EDGE, W/ OPPOSITE EDGE NAILED FROM OPPOSITE SIDE OFFSET 6", @ 12"oc W/ FIRST NAIL 2" FROM EA. END
3-PLY MEMBERS	20d NAILS AT 16"oc, 1 1/2" FROM EDGE W/ OPPOSITE EDGE NAILED FROM OPPOSITE SIDE OFFSET 8", @ 16"oc W/ FIRST NAIL 3" FROM EA. END	8d NAILS AT 12"oc, 1" FROM EDGE, W/ OPPOSITE EDGE NAILED FROM OPPOSITE SIDE OFFSET 6", @ 12"oc W/ FIRST NAIL 2" FROM EA. END
4-PLY MEMBERS	1/4"Φx5" SIMPSON SDS SCREWS AT 16"oc, 1 1/2" FROM EDGE W/ OPPOSITE EDGE SCREWED FROM OPPOSITE SIDE OFFSET 8", @ 16"oc W/ FIRST SCREW 4" FROM EA. END	3 PLIES ATTACHED PER 3-PLY ATTACHMENT WITH 4TH PLY ATTACHED WITH 8d NAILS AT 12"oc IN 2 ROWS, 1 1/2" FROM EDGE, OFFSET ROWS 6"
5-PLY MEMBERS	1/4"Φx6" SIMPSON SDS SCREWS AT 12"oc, 1 1/2" FROM EDGE W/ OPPOSITE EDGE SCREWED FROM OPPOSITE SIDE OFFSET 6", @ 12"oc W/ FIRST SCREW 4" FROM EA. END	3 PLIES ATTACHED PER 3-PLY ATTACHMENT WITH 4TH & 5TH PLY ATTACHED AT OPPOSITE SIDES WITH 8d NAILS AT 12"oc IN 2 ROWS, 1 1/2" FROM EDGE, OFFSET ROWS 6"
6-PLY MEMBERS	1/4"Φx8" SIMPSON SDS SCREWS AT 12"oc, 1 1/2" FROM EDGE W/ OPPOSITE EDGE SCREWED FROM OPPOSITE SIDE OFFSET 6", @ 12"oc W/ FIRST SCREW 4" FROM EA. END	3-PLIES ATTACHED PER 3-PLY ATTACHMENT WITH 4TH PLY ATTACHED WITH 8d NAILS AT 12"oc IN 2 ROWS, 1 1/2" FROM EDGE, OFFSET ROWS 6" AND 5TH AND 6TH PLIES ATTACHED WITH 1/4"Φx5" SIMPSON SDS SCREWS AT 12"oc IN 2 ROWS, 1 1/2" FROM EDGE, OFFSET ROWS 6"oc W/ FIRST SCREW 4" FROM EA. END

NOTES:
1. ALL BUILT-UP STUD PACKS MUST ALIGN FLOOR-TO-FLOOR WITH SOLID BLOCKING (SQUASH BLOCKS) AT FLOOR CAVITIES.
2. EXTEND ALL STUD PACKS TO COLUMNS UNLESS NOTED OTHERWISE.
3. ALL NAILS ARE COMMON NAILS UNLESS NOTED OTHERWISE.

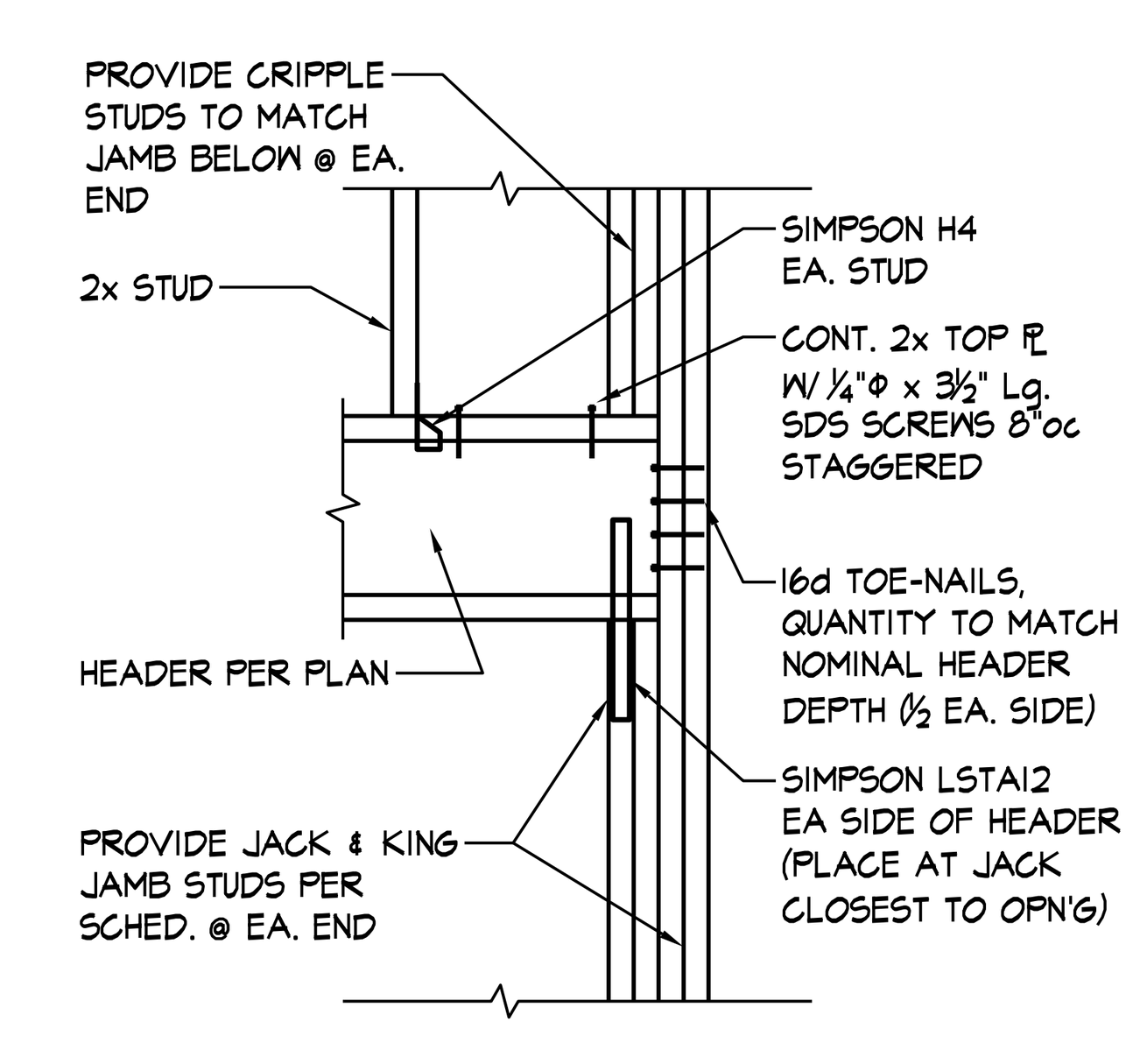

TYP. HEADER DETAIL @ ROOF TRUSS BEARING LOCATIONS

SECTION (7/S1.1)
¾" = 1'-0"

BOB D. CAMPBELL & CO.
Structural Engineers Since 1957
4338 Belleview Ave. 816.531.4144
Kansas City, MO 64111 www.bdc-engrs.com

JonesGillamRenz
730 N. Ninth 1881 Main Street, Suite 301
Salina, KS 67401 Kansas City, MO 64108
785.827.0386 jgr@jgrarchitects.com

ANDOVER SENIOR LIVING
NEW APARTMENTS
ANDOVER, KANSAS

MICHAEL J. FALBE LICENSED 10296 KANSAS PROFESSIONAL ENGINEER 1·3·2025

REVISION:

DATE: 1-03-2025
JOB: 24-3385
SHEET NO.:

S1.1

COPYRIGHTED ©

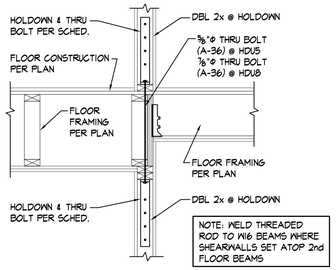

TYP HOLDOWN DETAIL

SECTION ¾" = 1'-0" 2 / S1.2

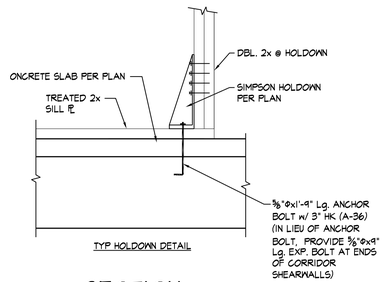

TYP HOLDOWN DETAIL

SECTION ¾" = 1'-0" 3 / S1.2

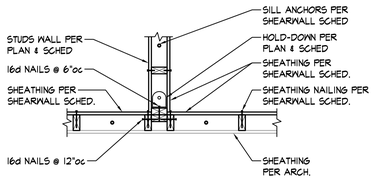

TYPICAL @ DISCONTINUOUS SHEARWALL SHEATHING

SECTION ¾" = 1'-0" 4A / S1.2

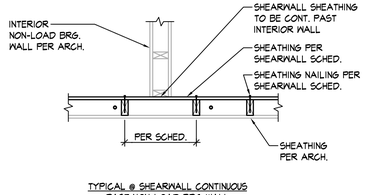

TYPICAL @ SHEARWALL CONTINUOUS PAST NON-LOAD BRG WALL

SECTION ¾" = 1'-0" 4B / S1.2

PROVIDE UNIT UPLIFT HOLDOWNS @ 48"oc MAX @ LOAD BEARING INTERIOR WALLS SUPPORTING ROOF TRUSSES. HOLDOWNS SHALL BE PROVIDED WITHIN 6" OF JAMBS OF ALL INTERIOR LOAD BEARING ROOF HEADERS & GIRDER TRUSS BEARING AND WITHIN 48" OF SHEARWALL HOLDOWNS

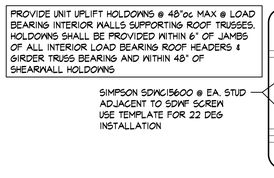

TYP SIDE VIEW @ DBL STUD SCREWS @ HOLDOWN

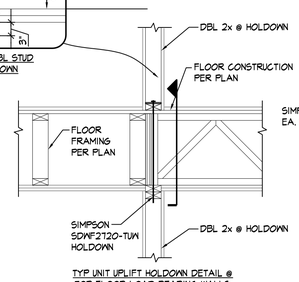

TYP UNIT UPLIFT HOLDOWN DETAIL @ TOP FLOOR LOAD BEARING WALLS

SECTION ¾" = 1'-0" 5A / S1.2

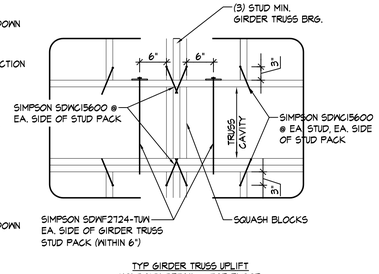

TYP GIRDER TRUSS UPLIFT HOLDOWN DETAIL @ TOP FLOOR

SECTION ¾" = 1'-0" 5B / S1.2

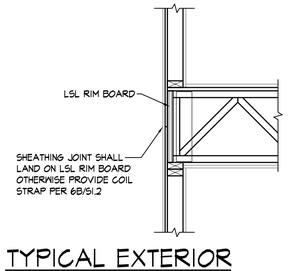

TYPICAL EXTERIOR SHEATHING JOINT

¾" = 1'-0" 6A / S1.2

HOLDOWN SCHEDULE

MARK	FLOOR LEVEL (W/ APPLICABLE HOLDOWN TYPE PER FLOOR)		
	1st FLOOR	2nd FLOOR	3rd FLOOR
*	HDU8-SDS2.5	HDU8-SDS2.5	HDU5-SDS2.5
**	HDU5-SDS2.5	HDU5-SDS2.5	HDU5-SDS2.5

NOTES:
1. HOLDOWN TYPES ARE BASED UPON MANUFACTURER SIMPSON STRONG-TIE.
2. REFER TO SECTION DETAILS ON S1.2 FOR TYPICAL HOLDOWN DETAILS.
3. WHERE THE ENDS OF PERPENDICULAR SHEAR WALLS INTERSECT AND ONLY ONE HOLDOWN SHOWN ON PLAN, FASTEN ALL STUDS TOGETHER PER SCHEDULE AND USE LARGER OF THE TWO HOLDOWNS SHOWN ON THE SHEAR WALL SCHEDULE.
4. ALL HOLDOWN POSTS TO BE (2) 2x's (MIN.) (U.N.O.) TO MATCH STUD SIZE & GRADE NOTED IN WALL SCHEDULE. PROVIDE ADDITIONAL STUDS AS REQ'D TO MEET QUANTITY NOTED IN SCHED.
5. REFER TO SECTIONS 2/S1.2, 3/S1.2, 4A/S1.2 & 4B/S1.2 FOR HOLDOWN ANCHOR REQUIREMENTS.

SHEARWALL SCHEDULE

SHEARWALL LOCATION	SHEARWALL TYPE		FLOOR		SILL PLATE CONNECTION (RE: NOTES 6 & 7)	NUMBER OF WALL STUDS AT HOLD-DOWN (RE: NOTE 4)
			1st FLOOR WALLS	2nd & 3rd FLOOR WALLS		
AT DEMISING WALLS	SW	MATERIAL & THICKNESS	7/16" OSB SHEATHING ONE SIDE, w/ EDGES BLOCKED	7/16" OSB SHEATHING ONE SIDE, w/ EDGES BLOCKED		
		NAIL SIZE & SPACING	8d NAILS 4/12	8d NAILS 6/12		
AT CORRIDOR WALLS	SW	MATERIAL & THICKNESS	7/16" OSB SHEATHING ONE SIDE, w/ EDGES BLOCKED	7/16" OSB SHEATHING ONE SIDE, w/ EDGES BLOCKED		
		NAIL SIZE & SPACING	8d NAILS 4/12	8d NAILS 6/12		

NOTES:
1. NAILING SHALL BE TO ALL STUDS, TOP & BOTTOM PLATES, AND BLOCKING WHERE INDICATED.
2. HOLDOWNS PER PLAN & SCHEDULE.
3. WHERE THE ENDS OF PERPENDICULAR SHEAR WALLS INTERSECT AND ONLY ONE HOLDDOWN SHOWN ON PLAN, FASTEN ALL STUDS TOGETHER PER SCHEDULEA AND USE LARGE OF THE TWO HOLDDOWNS SHOWN IN THE SHEARWALL SCHEDULE. REFERENCE DETAILS 4A, 4B, 4C, AND 4D ON SHEET S1.2 FOR SHEATHING AND HOLDOWN ATTACHMENT AT PERPENDICULAR WALLS AND STUD WALL SIZE TRANSITIONS.
4. PROVIDE 2 WALL STUDS AT EACH HOLDDOWN UNLESS NOTED OTHERWISE IN SCHEDULE. AT LOCATIONS WHERE A SHEARWALL TERMINATES AT A OPENING JAMB, PROVIDE NUMBER OF STUDS PER JAMB SCHEDULE PLUS AN ADDITIONAL STUD FOR THE SHEARWALL. ATTACH ALL STUDS TOGETHER PER 6/S1.1.
5. NAIL SPACING SHOWN AS (#/#) INDICATES FASTENERS SPACING IN INCHES AT THE EDGES/FIELD WHERE FIELD IS THE INTERMEDIATE MEMBERS.
6. TYPICAL SILL PLATE TO WOOD SHALL BE 20d COMMON NAILS (1.092x4") AT 12"oc UNLESS NOTED OTHERWISE IN SCHEDULE.
7. TYPICAL SILL PLATE TO CONCRETE SHALL BE ½"ø ANCHORS:
   AT 2x4 WALLS SPACE AT 24"oc MAX WITH ¼"x2½"x2½" PLATE WASHER OR SIMPSON BPS ½ - 3 @ CONTRACTORS OPTION
   PLATE WASHERS TO MAINTAIN MAX OF ½" BETWEEN EDGE OF SILL PLATE AND EDGE OF PLATE WASHER
8. SHEARWALL SHEATHING CALLED OUT AT CORRIDOR WALLS SHALL BE LOCATED AT UNIT SIDE OF WALL
9. AT GYPSUM SHEARWALLS NO. 6 x 1¼" TYPE S OR W SCREWS CAN BE UTILIZED AS THE SAME SPACING AS SPECIFIED 6d NAILS.
10. NAILS @ WOOD STRUCTURE PANEL SHEAR WALLS SHALL BE GALVANIZED COMMON OF TYPE INDICATED IN SCHED.

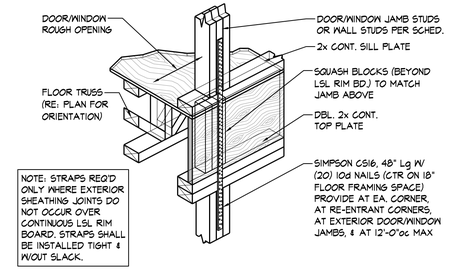

TYPICAL COIL STRAP @ EXTERIOR JAMBS SUPPORTING ROOF FRAMING AT FLOOR DIRECTLY BELOW ROOF

DETAIL ¾" = 1'-0" 6B / S1.2

Wichita-Sedgwick County
Metropolitan Area Building
and Construction Department

REVIEWED FOR CODE COMPLIANCE

CORRECTIONS OR COMMENTS MADE ON THESE DRAWINGS AND THIS DOCUMENT DURING THIS REVIEW DO NOT RELIEVE CONTRACTOR FROM COMPLIANCE WITH ALL REQUIREMENTS OF THE CODE OF THE MABCD, THE CITY OF WICHITA OR SEDGWICK COUNTY. THIS REVIEW IS ONLY FOR GENERAL CONFORMANCE OF THE CODE. THE CONTRACTOR IS RESPONSIBLE FOR CONFORMING AND CORRELATING ALL TECHNIQUES OF CONSTRUCTION. THIS APPROVAL IS SUBJECT TO PROVISIONS OF SECTION 107.4 OF THE 2012 INTERNATIONAL BUILDING CODE.

DATE: 02/19/25 BY: William Jerauld Jr

JonesGillamRenz
730 N. Ninth 1881 Main Street, Suite 301
Salina, KS 67401 Kansas City, MO 64108
785.827.0386 jgr@jgrarchitects.com

ANDOVER SENIOR LIVING
NEW APARTMENTS
ANDOVER, KANSAS

MICHAEL J. FALEN LICENSED 10296 1-3-2025 KANSAS PROFESSIONAL ENGINEER

REVISION:

DATE: 1-03-2025
JOB: 24-3385
SHEET NO.:

S1.2

BOB D. CAMPBELL & CO.
Structural Engineers Since 1957
4338 Belleview Ave. 816.531.4144
Kansas City, MO 64111 www.bdc-engrs.com

COPYRIGHTED©

Wichita-Sedgwick County
Metropolitan Area Building
and Construction Department

REVIEWED FOR CODE COMPLIANCE

CORRECTIONS OR COMMENTS MADE ON THESE DRAWINGS AND THIS DOCUMENT DURING THIS REVIEW DO NOT RELIEVE CONTRACTOR FROM COMPLIANCE WITH ALL REQUIREMENTS OF THE CODE OF THE MARCH, THE CITY OF WICHITA OR SEDGWICK COUNTY. THIS REVIEW IS ONLY FOR GENERAL CONFORMANCE OF THE CODE. THE CONTRACTOR IS RESPONSIBLE FOR CONFORMING AND CORRELATING ALL TECHNIQUES OF CONSTRUCTION. THIS APPROVAL IS SUBJECT TO PROVISIONS OF SECTION 107.4 OF THE 2012 INTERNATIONAL BUILDING CODE.

DATE: 02/19/25 BY: William Jerauld Jr

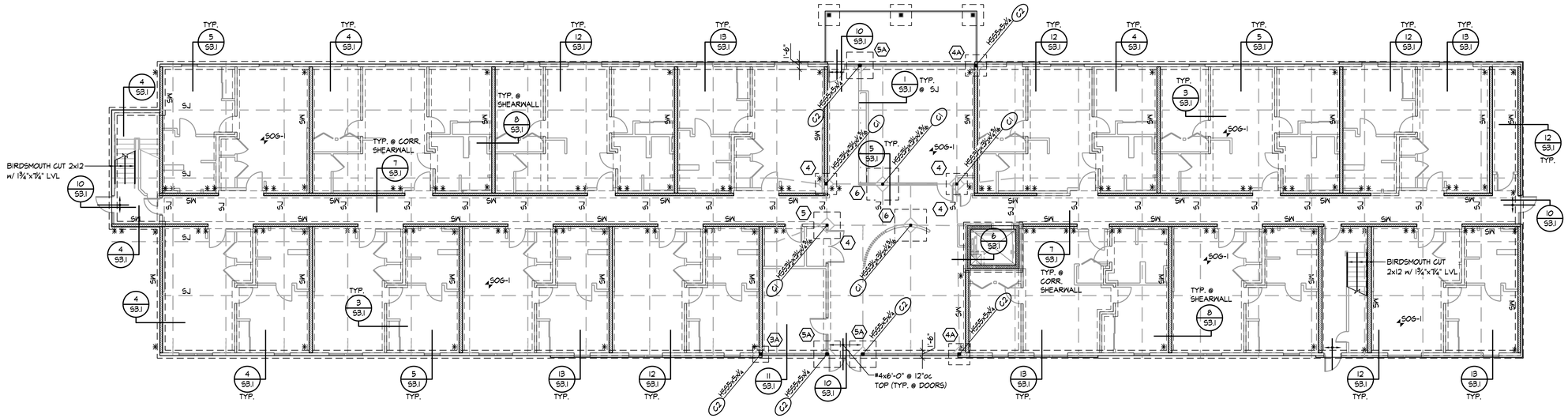

FOUNDATION PLAN

3/32" = 1'-0"

NOTES:

1. REFER TO GENERAL NOTES ON SHEET S1.0
2. REFER TO COLUMN & FOOTING SCHEDULE ON SHEET S1.1
3. T/C EL. 100'-0"
4. T/FTG. EL. 99'-4" U.N.O.
5. REFER TO ARCHITECTURAL DRAWINGS FOR DIMENSIONS NOT SHOWN
6. REFER TO SHEET S2.6 FOR SHEARWALL AND HOLDOWN INFORMATION
7. REFER TO SHEETS S1.1 AND S1.2 FOR TYPICAL NAILING WOOD FRAMING DETAILS

JonesGillamRenz
730 N. Ninth 1881 Main Street, Suite 301
Salina, KS 67401 Kansas City, MO 64108
785.827.0386 jgr@jgrarchitects.com

ANDOVER SENIOR LIVING

NEW APARTMENTS

ANDOVER, KANSAS

MICHAEL J. FALDER LICENSED 10296 1-3-2025 KANSAS PROFESSIONAL ENGINEER

REVISION:

DATE: 1-03-2025
JOB: 24-3385
SHEET NO.:

S2.1

BOB D. CAMPBELL & CO.
Structural Engineers Since 1957
4338 Belleview Ave. 816.531.4144
Kansas City, MO 64111 www.bdc-engrs.com

COPYRIGHTED ©

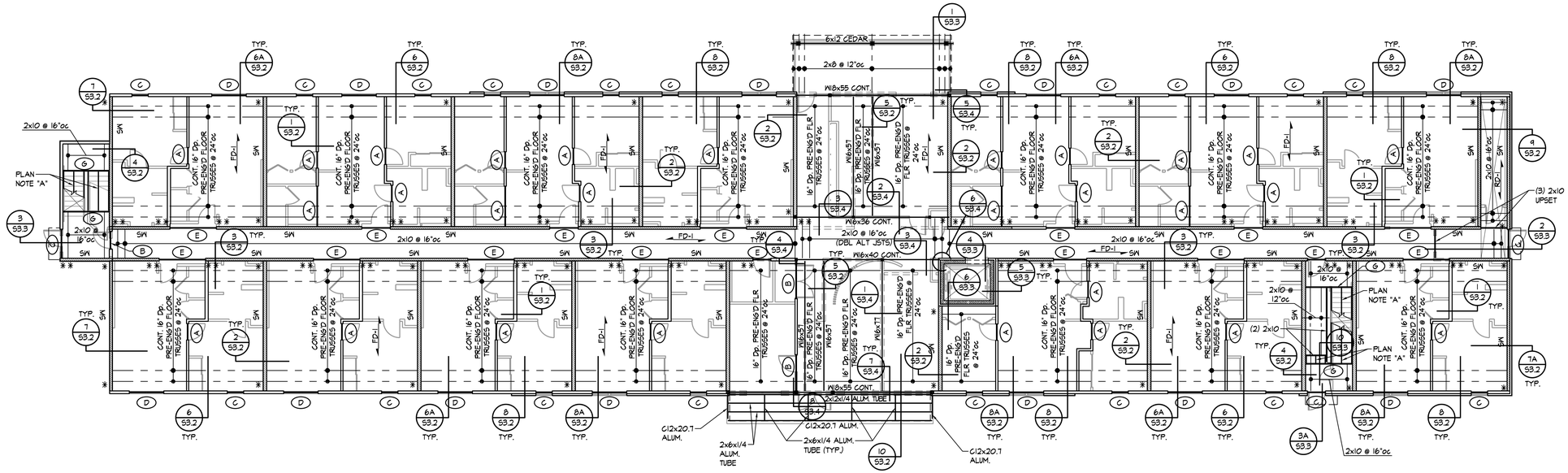

NORTH

SECOND FLOOR FRAMING PLAN

3/32" = 1'-0"

NOTES:

1. REFER TO GENERAL NOTES ON SHEET S1.0
2. REFER TO HEADER SCHEDULE ON SHEET S1.1
3. REFER TO ARCHITECTURAL DRAWINGS FOR DIMENSIONS NOT SHOWN
4. REFER TO SHEET S2.6 FOR SHEARWALL AND HOLDOWN INFORMATION
5. REFER TO SECTIONS 5A, 5B, 6A AND 6B ON SHEET S1.2 FOR HOLDOWN DETAILS AT THE SECOND FLOOR
6. REFER TO SHEETS S1.1 AND S1.2 FOR TYPICAL NAILING WOOD FRAMING DETAILS
7. PLAN NOTE "A" DENOTES BIRDSMOUTH CUT 2x12 w/ 1¾"x11¾" LVL @ EACH STAIR STRINGER

Wichita-Sedgwick County
Metropolitan Area Building
and Construction Department

REVIEWED FOR CODE COMPLIANCE

CORRECTIONS OR COMMENTS MADE ON THESE DRAWINGS AND THIS DOCUMENT DURING THIS REVIEW DO NOT RELIEVE CONTRACTOR FROM COMPLIANCE WITH ALL REQUIREMENTS OF THE CODE OF THE MABCD, THE CITY OF WICHITA OR SEDGWICK COUNTY. THIS REVIEW IS ONLY FOR GENERAL CONFORMANCE OF THE CODE. THE CONTRACTOR IS RESPONSIBLE FOR CONFORMING AND CORRELATING ALL TECHNIQUES OF CONSTRUCTION. THIS APPROVAL IS SUBJECT TO PROVISIONS OF SECTION 107.4 OF THE 2012 INTERNATIONAL BUILDING CODE.

DATE: 02/19/25 BY: William Jerauld Jr

JonesGillamRenz
730 N. Ninth 1881 Main Street, Suite 301
Salina, KS 67401 Kansas City, MO 64108
785.827.0386 jgr@jgrarchitects.com

ANDOVER SENIOR LIVING

NEW APARTMENTS

ANDOVER, KANSAS

MICHAEL J. FALL LICENSED 10290 1-3-2025 KANSAS PROFESSIONAL ENGINEER

REVISION:

DATE: 1-03-2025
JOB: 24-3385
SHEET NO.:

S2.2

BOB D. CAMPBELL & CO.
Structural Engineers Since 1957
4338 Belleview Ave. 816.531.4144
Kansas City, MO 64111 www.bdc-engrs.com

COPYRIGHTED ©

Wichita-Sedgwick County
Metropolitan Area Building
and Construction Department

REVIEWED FOR CODE COMPLIANCE

CORRECTIONS OR COMMENTS MADE ON THESE DRAWINGS AND THIS DOCUMENT DURING THIS REVIEW DO NOT RELIEVE CONTRACTOR FROM COMPLIANCE WITH ALL REQUIREMENTS OF THE CODE OF THE MABCD, THE CITY OF WICHITA OR SEDGWICK COUNTY. THIS REVIEW IS ONLY FOR GENERAL CONFORMANCE OF THE CODE. THE CONTRACTOR IS RESPONSIBLE FOR CONFORMING AND CORRELATING ALL TECHNIQUES OF CONSTRUCTION. THIS APPROVAL IS SUBJECT TO PROVISIONS OF SECTION 107.4 OF THE 2012 INTERNATIONAL BUILDING CODE.

DATE: 02/19/25 BY: William Jerauld Jr

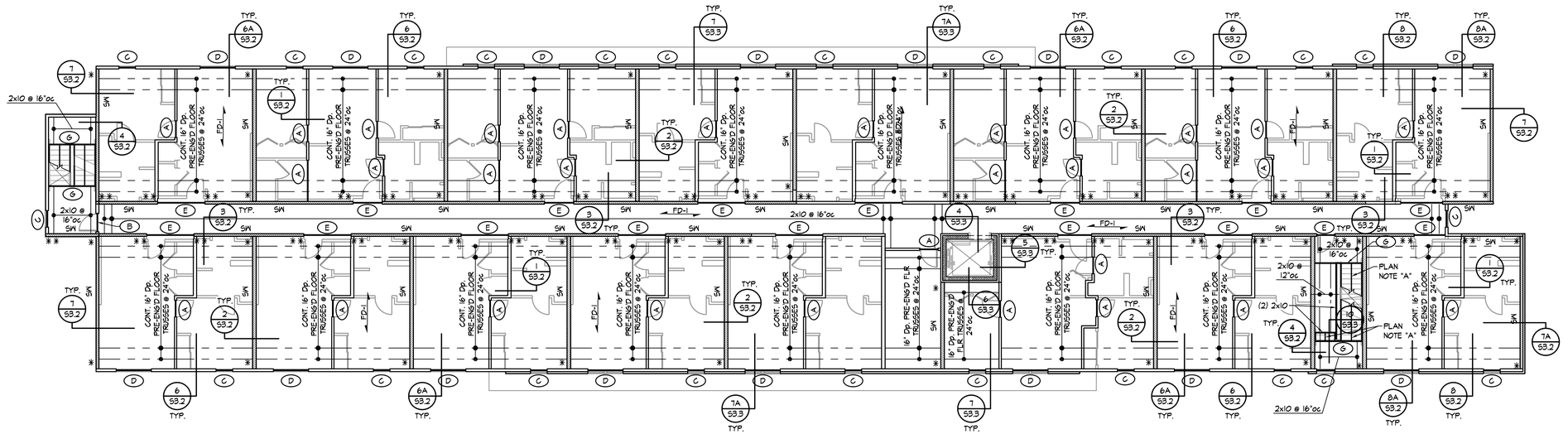

NORTH

THIRD FLOOR FRAMING PLAN

3/32" = 1'-0"

NOTES:

1. REFER TO GENERAL NOTES ON SHEET S1.0
2. REFER TO HEADER SCHEDULE ON SHEET S1.1
3. REFER TO ARCHITECTURAL DRAWINGS FOR DIMENSIONS NOT SHOWN
4. REFER TO SHEET S2.6 FOR SHEARWALL AND HOLDOWN INFORMATION
5. REFER TO SECTIONS 5A, 5B, 6A AND 6B ON SHEET S1.2 FOR HOLDOWN DETAILS AT THE SECOND FLOOR
6. REFER TO SHEETS S1.1 AND S1.2 FOR TYPICAL NAILING WOOD FRAMING DETAILS
7. PLAN NOTE "A" DENOTES BIRDSMOUTH CUT 2x12 w/ 1¾"x7¼" LVL @ EACH STAIR STRINGER

JonesGillamRenz
730 N. Ninth 1881 Main Street, Suite 301
Salina, KS 67401 Kansas City, MO 64108
785.827.0386 jgr@jgrarchitects.com

ANDOVER SENIOR LIVING

NEW APARTMENTS

ANDOVER, KANSAS

MICHAEL J. FALDER LICENSED 10296 1-3-2025 KANSAS PROFESSIONAL ENGINEER

REVISION:

DATE: 1-03-2025
JOB: 24-3385
SHEET NO.:

S2.3

BOB D. CAMPBELL & CO.
Structural Engineers Since 1957
4338 Belleview Ave. 816.531.4144
Kansas City, MO 64111 www.bdc-engrs.com

COPYRIGHTED ©

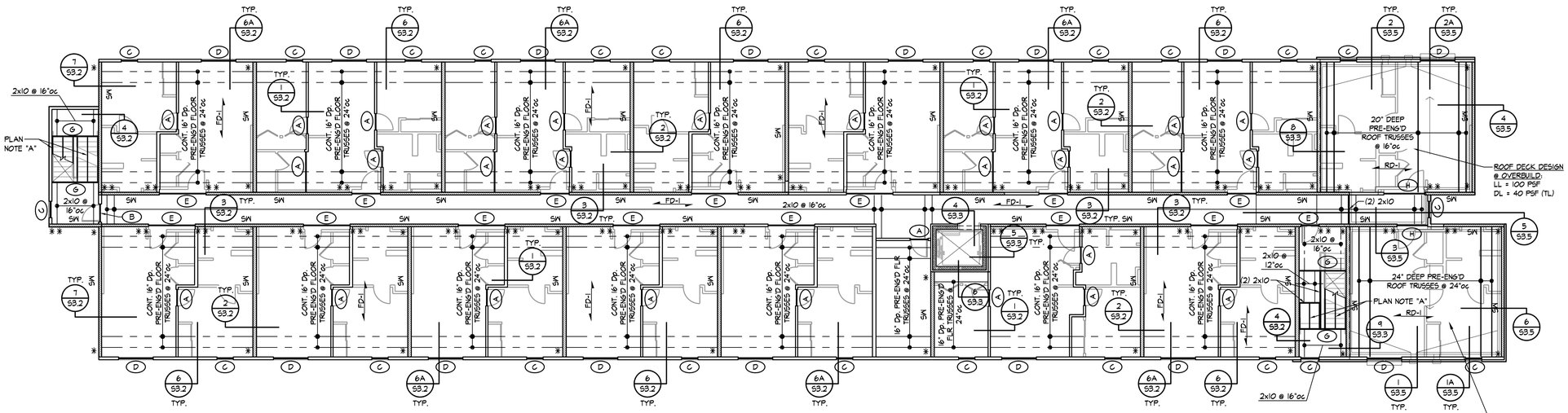

FOURTH FLOOR & LOW ROOF FRAMING PLAN

3/32" = 1'-0"

NOTES:

1. REFER TO GENERAL NOTES ON SHEET S1.0
2. REFER TO HEADER SCHEDULE ON SHEET S1.1
3. REFER TO ARCHITECTURAL DRAWINGS FOR DIMENSIONS NOT SHOWN
4. REFER TO SHEET S2.6 FOR SHEARWALL AND HOLDOWN INFORMATION
5. REFER TO SECTIONS 5A, 5B, 6A AND 6B ON SHEET S1.2 FOR HOLDOWN DETAILS AT THE SECOND FLOOR
6. REFER TO SHEETS S1.1 AND S1.2 FOR TYPICAL NAILING WOOD FRAMING DETAILS
7. PLAN NOTE "A" DENOTES BIRDSMOUTH CUT 2x12 W/ 1¾"x11¼" LVL @ EACH STAIR STRINGER
8. ALL EXTERIOR DECK FRAMING TO BE TREATED LUMBER AT EXTERIOR ROOF DECK

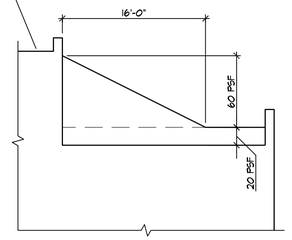

DESIGN SNOW DRIFT AT LOW ROOF

Wichita-Sedgwick County
Metropolitan Area Building
and Construction Department

REVIEWED FOR CODE COMPLIANCE

CORRECTIONS OR COMMENTS MADE ON THESE DRAWINGS AND THIS DOCUMENT DURING THIS REVIEW DO NOT RELIEVE CONTRACTOR FROM COMPLIANCE WITH ALL REQUIREMENTS OF THE CODE OF THE MABCD, THE CITY OF WICHITA OR SEDGWICK COUNTY. THIS REVIEW IS ONLY FOR GENERAL CONFORMANCE OF THE CODE. THE CONTRACTOR IS RESPONSIBLE FOR CONFORMING AND CORRELATING ALL TECHNIQUES OF CONSTRUCTION. THIS APPROVAL IS SUBJECT TO PROVISIONS OF SECTION 107.4 OF THE 2012 INTERNATIONAL BUILDING CODE.

DATE: 02/19/25 BY: William Jerauld Jr

JonesGillamRenz
730 N. Ninth 1881 Main Street, Suite 301
Salina, KS 67401 Kansas City, MO 64108
785.827.0386 jgr@jgrarchitects.com

ANDOVER SENIOR LIVING

NEW APARTMENTS

ANDOVER, KANSAS

MICHAEL J. FALK
10298
1-3-2025
KANSAS
PROFESSIONAL ENGINEER

REVISION:

DATE: 1-03-2025
JOB: 24-3385
SHEET NO.:

S2.4

BOB D. CAMPBELL & CO.
Structural Engineers Since 1957
4338 Belleview Ave. 816.531.4144
Kansas City, MO 64111 www.bdc-engrs.com

COPYRIGHTED©

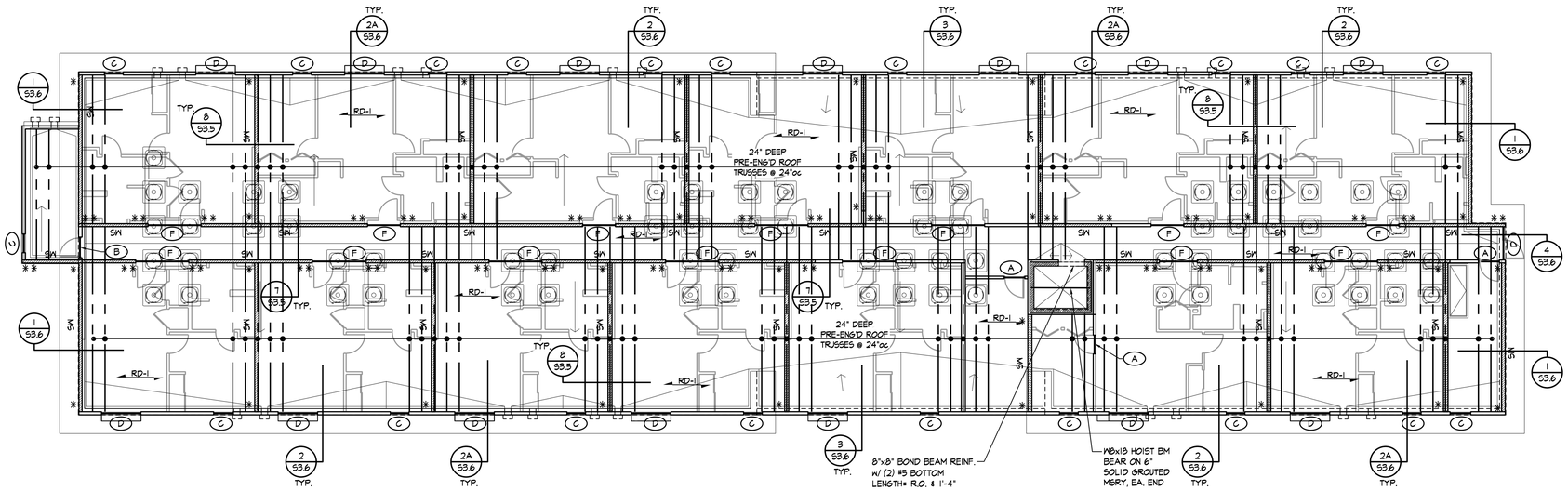

NORTH

ROOF FRAMING PLAN

3/32" = 1'-0"

NOTES:

1. REFER TO GENERAL NOTES ON SHEET S1.0
2. REFER TO HEADER SCHEDULE ON SHEET S1.1
3. REFER TO ARCHITECTURAL DRAWINGS FOR DIMENSIONS NOT SHOWN
4. PROVIDE TRIPLE 2x6 OR QUADRUPLE 2x4 STUDS AT ALL PRE-ENG. TRUSS GIRDERS (EXTEND TO FOUNDATION)
5. REFER TO SHEETS S1.1 AND S1.2 FOR TYPICAL NAILING WOOD FRAMING DETAILS

Wichita-Sedgwick County
Metropolitan Area Building
and Construction Department

REVIEWED FOR CODE COMPLIANCE

CORRECTIONS OR COMMENTS MADE ON THESE DRAWINGS AND THIS DOCUMENT DURING THIS REVIEW DO NOT RELIEVE CONTRACTOR FROM COMPLIANCE WITH ALL REQUIREMENTS OF THE CODE OF THE MABCD, THE CITY OF WICHITA OR SEDGWICK COUNTY. THIS REVIEW IS ONLY FOR GENERAL CONFORMANCE OF THE CODE. THE CONTRACTOR IS RESPONSIBLE FOR CONFORMING AND CORRELATING ALL TECHNIQUES OF CONSTRUCTION. THIS APPROVAL IS SUBJECT TO PROVISIONS OF SECTION 107.4 OF THE 2012 INTERNATIONAL BUILDING CODE.

DATE: 02/19/25 BY: William Jerauld Jr

JonesGillamRenz
730 N. Ninth 1881 Main Street, Suite 301
Salina, KS 67401 Kansas City, MO 64108
785.827.0386 jgr@jgrarchitects.com

ANDOVER SENIOR LIVING
NEW APARTMENTS
ANDOVER, KANSAS

MICHAEL J. FALK
LICENSED
10296
1-3-2025
KANSAS
PROFESSIONAL ENGINEER

REVISION:

DATE: 1-03-2025
JOB: 24-3385
SHEET NO.:

S2.5

BOB D. CAMPBELL & CO.
Structural Engineers Since 1957
4338 Belleview Ave. 816.531.4144
Kansas City, MO 64111 www.bdc-engrs.com

COPYRIGHTED©

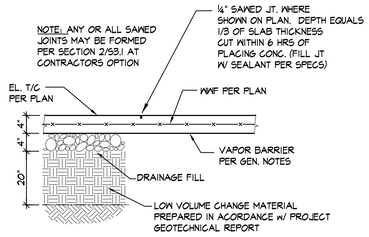

TYPICAL SAW JOINT
NOTED "SJ" ON PLAN

SECTION 1 S3.1
¾" = 1'-0"

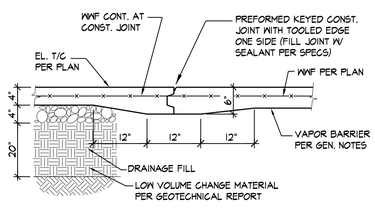

TYP. CONST JT (CJ)
MAY BE SUBSTITUTED FOR SJ AT CONTRACTOR'S OPTION

SECTION 2 S3.1
¾" = 1'-0"

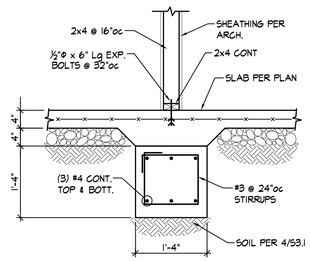

TYP. THICKENED SLAB @ INT. BRG. WALL

SECTION 3 S3.1
¾" = 1'-0"

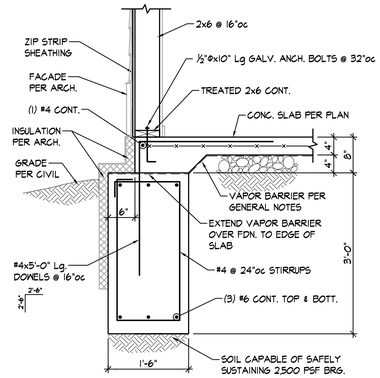

SECTION 4 S3.1
¾" = 1'-0"

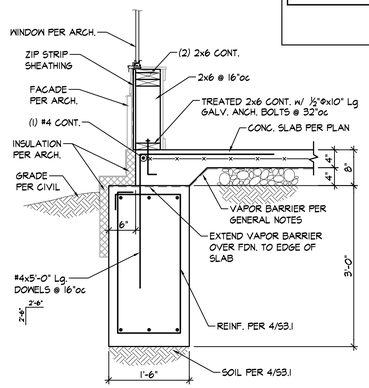

SECTION 5 S3.1
¾" = 1'-0"

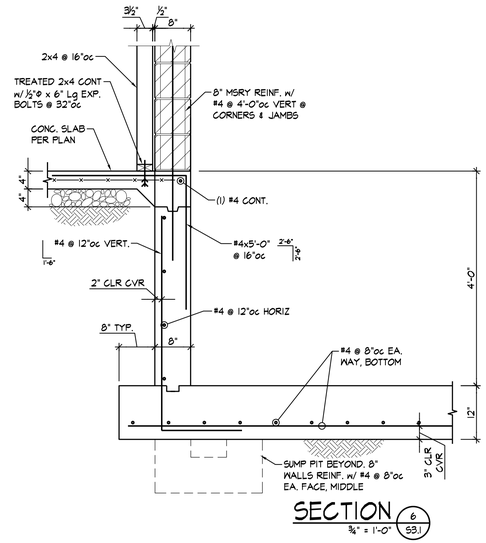

SECTION 6 S3.1
¾" = 1'-0"

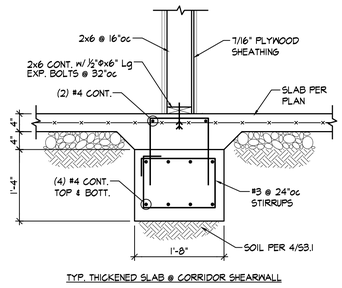

TYP. THICKENED SLAB @ CORRIDOR SHEARWALL

SECTION 7 S3.1
¾" = 1'-0"

NOTE: @ ENDS OF SHEARWALLS, PROVIDE SIMPSON HDS-SDS2.5 HOLDDOWN ANCHOR w/ DBL STUD & ⅝"ø x 1'Lg EXP. BOLT

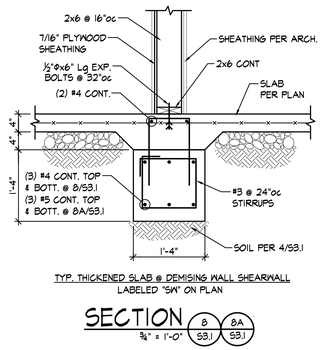

TYP. THICKENED SLAB @ DEMISING WALL SHEARWALL
LABELED "SW" ON PLAN

SECTION 8 8A S3.1
¾" = 1'-0"

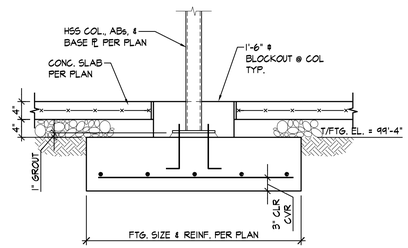

SECTION 9 S3.1
¾" = 1'-0"

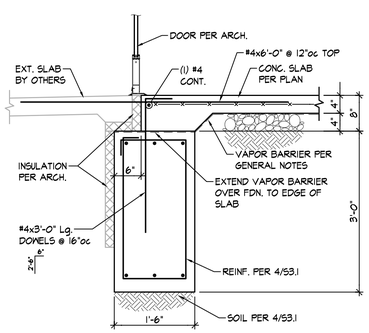

SECTION 10 S3.1
¾" = 1'-0"

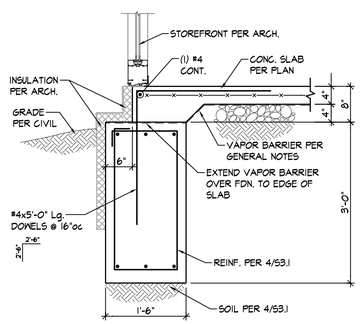

SECTION 11 S3.1
¾" = 1'-0"

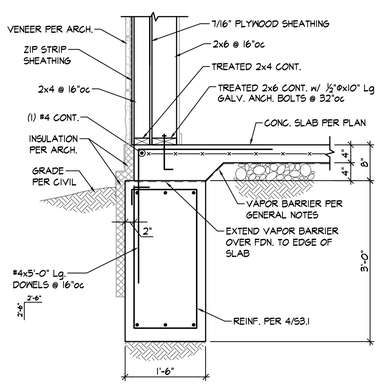

SECTION 12 S3.1
¾" = 1'-0"

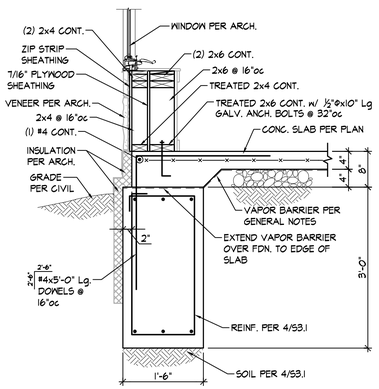

SECTION 13 S3.1
¾" = 1'-0"

Wichita-Sedgwick County
Metropolitan Area Building and Construction Department

REVIEWED FOR CODE COMPLIANCE

CORRECTIONS OR COMMENTS MADE ON THESE DRAWINGS AND THIS DOCUMENT DURING THIS REVIEW DO NOT RELIEVE CONTRACTOR FROM COMPLIANCE WITH ALL REQUIREMENTS OF THE CODE OF THE MARCH, THE CITY OF WICHITA OR SEDGWICK COUNTY. THIS REVIEW IS ONLY FOR GENERAL CONFORMANCE OF THE CODE. THE CONTRACTOR IS RESPONSIBLE FOR CONFORMING AND CORRELATING ALL TECHNIQUES OF CONSTRUCTION. THIS APPROVAL IS SUBJECT TO PROVISIONS OF SECTION 107.4 OF THE 2012 INTERNATIONAL BUILDING CODE.

DATE: 02/19/25 BY: William Jerauld Jr

JonesGillamRenz
730 N. Ninth 1881 Main Street, Suite 301
Salina, KS 67401 Kansas City, MO 64108
785.827.0386 jgr@jgrarchitects.com

JGR

ANDOVER SENIOR LIVING

NEW APARTMENTS

ANDOVER, KANSAS



REVISION:

DATE: 1-03-2025
JOB: 24-3385
SHEET NO.:

S3.1

BOB D. CAMPBELL & CO.
Structural Engineers Since 1957
4338 Belleview Ave. 816.531.4144
Kansas City, MO 64111 www.bdc-engrs.com

COPYRIGHTED©

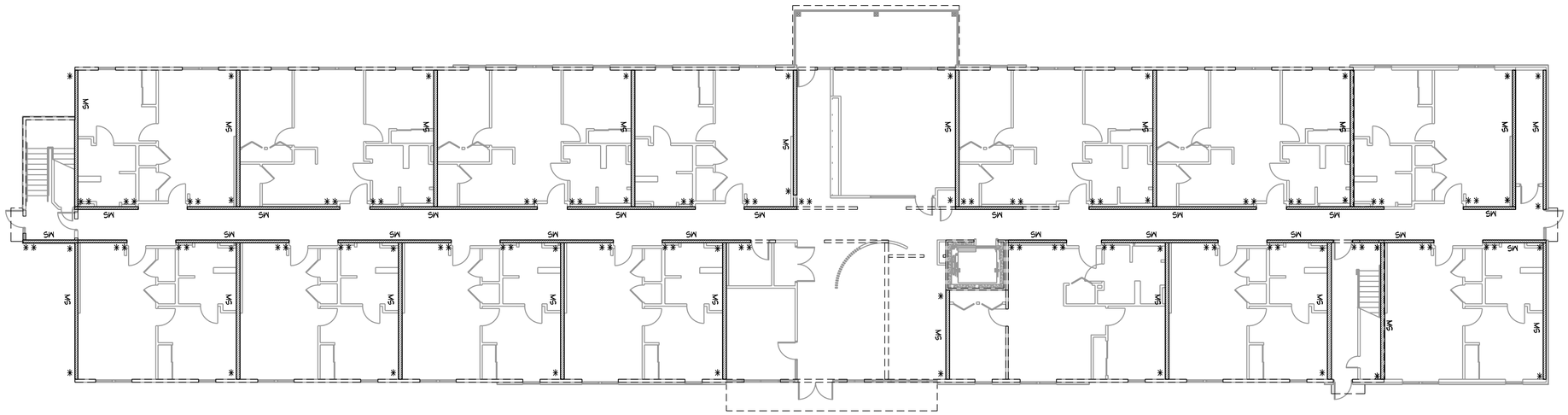

SHEARWALL PLAN

3/32" = 1'-0"

NOTES:

1. REFER TO GENERAL NOTES ON SHEET S1.0
2. REFER TO SHEARWALL & HOLDOWN SCHEDULES ON SHEET S1.2
3. SHEARWALLS/HOLDOWNS DESIGNATED AS FOLLOWS:

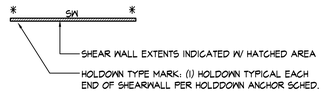

4. REFER TO DETAILS 2/S1.2 & 3/S1.2 FOR HOLDOWNS AT END OF WALL

Wichita-Sedgwick County
Metropolitan Area Building
and Construction Department

REVIEWED FOR CODE COMPLIANCE

CORRECTIONS OR COMMENTS MADE ON THESE DRAWINGS AND THIS DOCUMENT DURING THIS REVIEW DO NOT RELIEVE CONTRACTOR FROM COMPLIANCE WITH ALL REQUIREMENTS OF THE CODE OF THE MABCD, THE CITY OF WICHITA OR SEDGWICK COUNTY. THIS REVIEW IS ONLY FOR GENERAL CONFORMANCE OF THE CODE. THE CONTRACTOR IS RESPONSIBLE FOR CONFORMING AND CORRELATING ALL TECHNIQUES OF CONSTRUCTION. THIS APPROVAL IS SUBJECT TO PROVISIONS OF SECTION 107.4 OF THE 2012 INTERNATIONAL BUILDING CODE.

DATE: 02/19/25 BY: William Jerauld Jr

JonesGillamRenz
730 N. Ninth 1881 Main Street, Suite 301
Salina, KS 67401 Kansas City, MO 64108
785.827.0386 jgr@jgrarchitects.com

ANDOVER SENIOR LIVING

NEW APARTMENTS

ANDOVER, KANSAS

MICHAEL J. FALK LICENSED 10296 1-3-2025 KANSAS PROFESSIONAL ENGINEER

REVISION:

DATE: 1-03-2025

JOB: 24-3385

SHEET NO.:

S2.6

BOB D. CAMPBELL & CO.
Structural Engineers Since 1957
4338 Belleview Ave. 816.531.4144
Kansas City, MO 64111 www.bdc-engrs.com

COPYRIGHTED ©

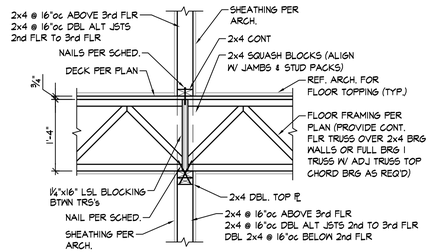

SECTION 1 S3.2
3/4" = 1'-0"

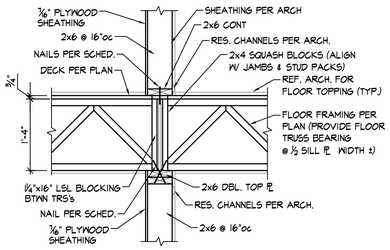

SECTION 2 S3.2
3/4" = 1'-0"

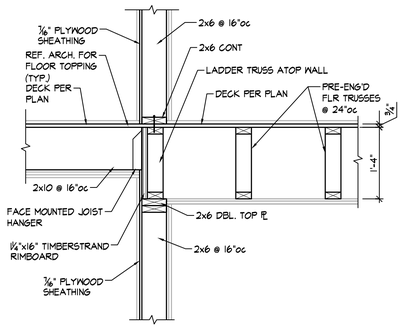

SECTION 3 S3.2
3/4" = 1'-0"

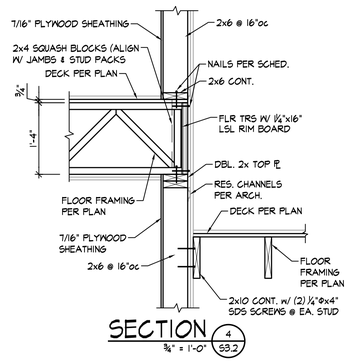

SECTION 4 S3.2
3/4" = 1'-0"

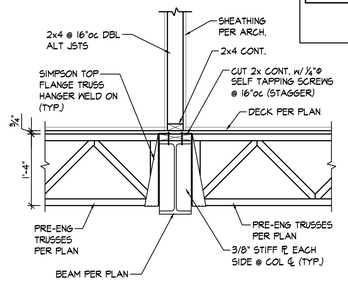

SECTION 5 S3.2
3/4" = 1'-0"

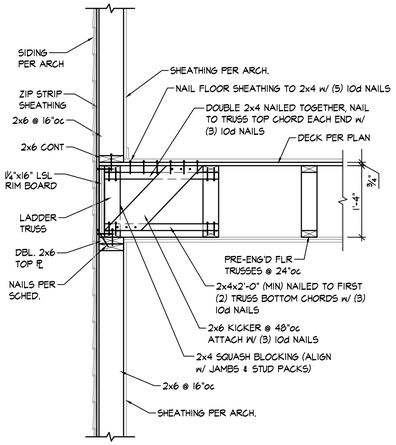

SECTION 6 S3.2
3/4" = 1'-0"

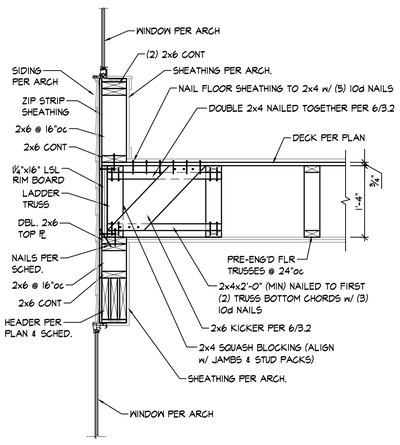

SECTION 6A S3.2
3/4" = 1'-0"

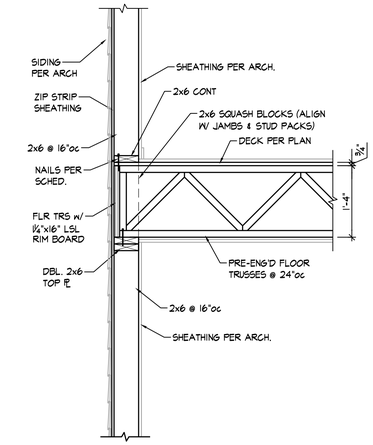

SECTION 7 S3.2
3/4" = 1'-0"

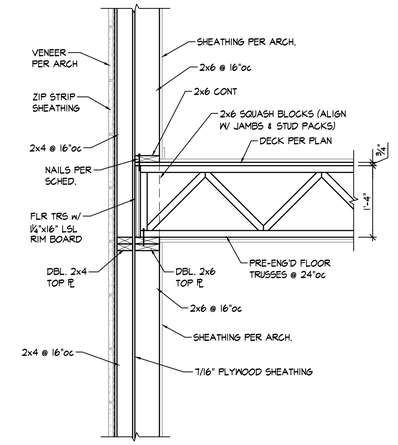

SECTION 7A S3.2
3/4" = 1'-0"

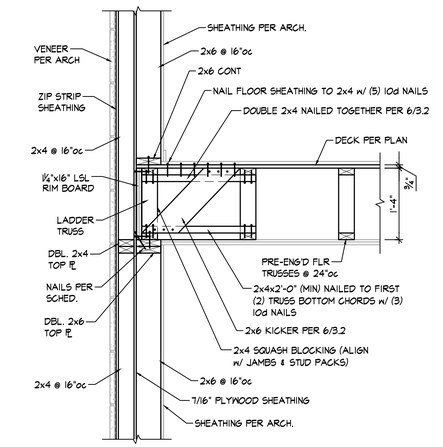

SECTION 8 S3.2
3/4" = 1'-0"

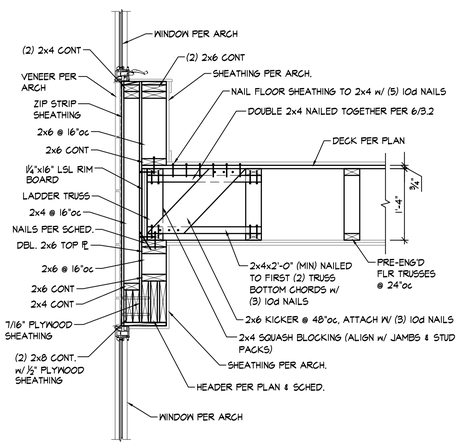

SECTION 8A S3.2
3/4" = 1'-0"

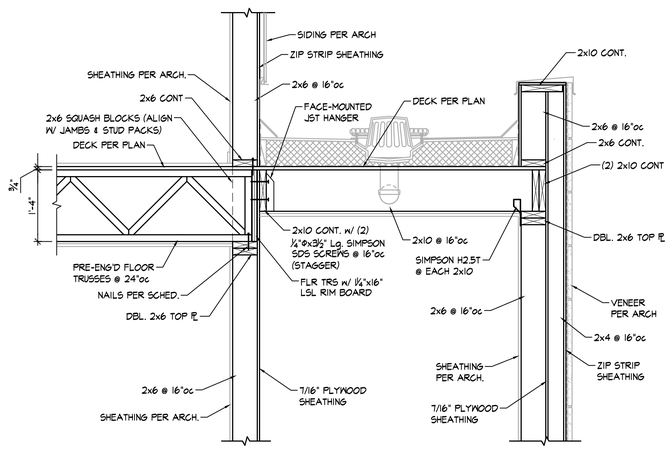

SECTION 9 S3.2
3/4" = 1'-0"

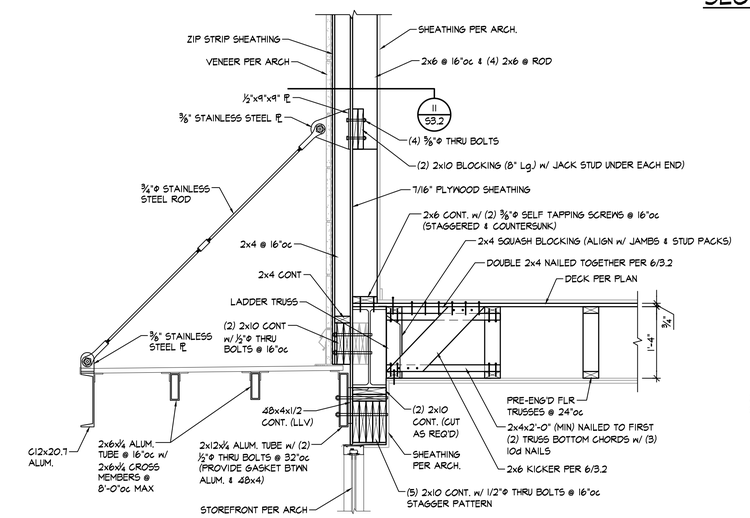

SECTION 10 S3.2
3/4" = 1'-0"

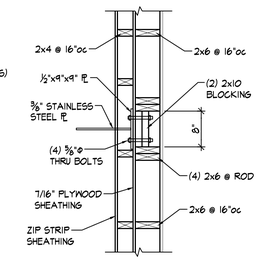

SECTION 11 S3.2
3/4" = 1'-0"

SECTION 8 S3.2
3/4" = 1'-0"

Wichita-Sedgwick County
Metropolitan Area Building
and Construction Department

REVIEWED FOR CODE COMPLIANCE

CORRECTIONS OR COMMENTS MADE ON THESE DRAWINGS AND THIS DOCUMENT DURING THIS REVIEW DO NOT RELIEVE CONTRACTOR FROM COMPLIANCE WITH ALL REQUIREMENTS OF THE CODE OF THE MABCD, THE CITY OF WICHITA OR SEDGWICK COUNTY. THIS REVIEW IS ONLY FOR GENERAL CONFORMANCE OF THE CODE. THE CONTRACTOR IS RESPONSIBLE FOR CONFORMING AND CORRELATING ALL TECHNIQUES OF CONSTRUCTION. THIS APPROVAL IS SUBJECT TO PROVISIONS OF SECTION 107.4 OF THE 2012 INTERNATIONAL BUILDING CODE.

DATE: 02/19/25 BY: William Jerauld Jr

JonesGillamRenz
730 N. Ninth 1881 Main Street, Suite 301
Salina, KS 67401 Kansas City, MO 64108
785.827.0386 jgr@jgrarchitects.com

ANDOVER SENIOR LIVING

NEW APARTMENTS

ANDOVER, KANSAS

MICHAEL J. FALDYN
10299
1-3-25
KANSAS
PROFESSIONAL ENGINEER

REVISION:

DATE: 1-03-2025
JOB: 24-3385
SHEET NO.:

S3.2

BOB D. CAMPBELL & CO.
Structural Engineers Since 1957
4338 Belleview Ave.
Kansas City, MO 64111 816.531.4144
www.bdc-engrs.com

COPYRIGHTED©

Wichita-Sedgwick County
Metropolitan Area Building
and Construction Department

REVIEWED FOR CODE COMPLIANCE

CORRECTIONS OR COMMENTS MADE ON THESE DRAWINGS AND THIS DOCUMENT DURING THIS REVIEW DO NOT RELIEVE CONTRACTOR FROM COMPLIANCE WITH ALL REQUIREMENTS OF THE CODE OF THE MARCH, THE CITY OF WICHITA OR SEDGWICK COUNTY. THIS REVIEW IS ONLY FOR GENERAL CONFORMANCE OF THE CODE. THE CONTRACTOR IS RESPONSIBLE FOR CONFORMING AND CORRELATING ALL TECHNIQUES OF CONSTRUCTION. THIS APPROVAL IS SUBJECT TO PROVISIONS OF SECTION 107.4 OF THE 2012 INTERNATIONAL BUILDING CODE.

DATE: 02/19/25 BY: William Jerauld Jr

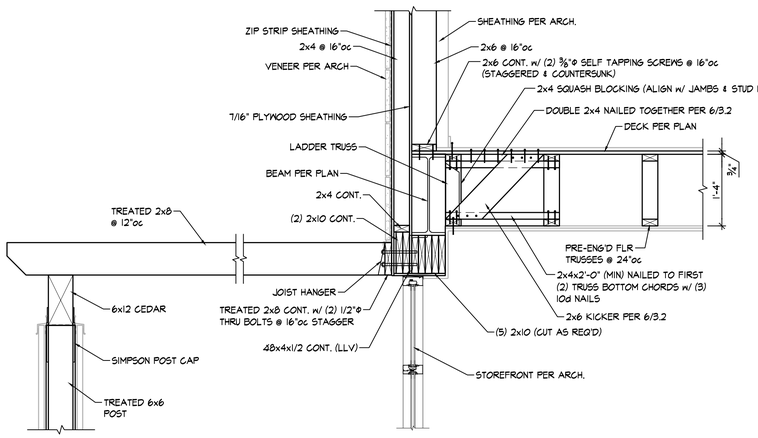

SECTION 1 — 3/4" = 1'-0" — 53.3

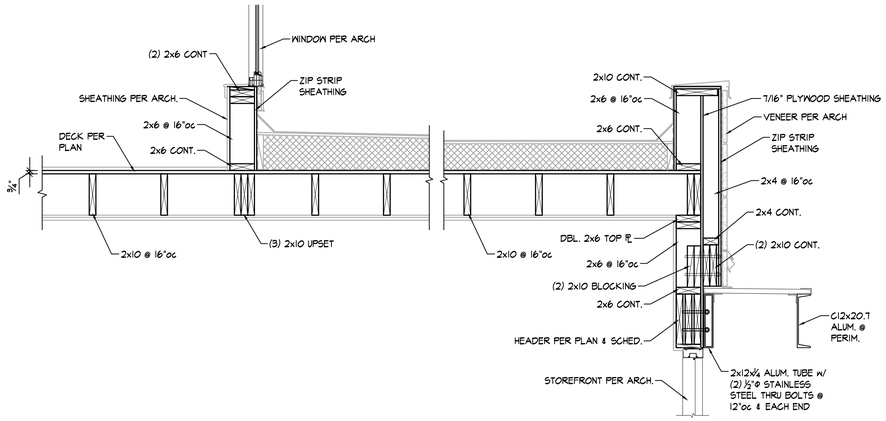

SECTION 2 — 3/4" = 1'-0" — 53.3

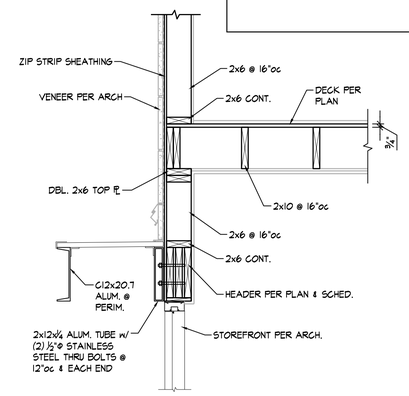

SECTION 3 — 3/4" = 1'-0" — 53.3

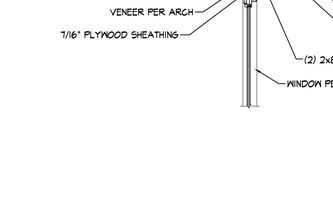

SECTION 3A — 3/4" = 1'-0" — 53.3



SECTION 4 — 3/4" = 1'-0" — 53.3

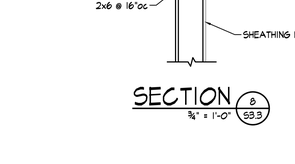

SECTION 5 — 3/4" = 1'-0" — 53.3

SECTION 6 — 3/4" = 1'-0" — 53.3

SECTION 7 — 3/4" = 1'-0" — 53.3

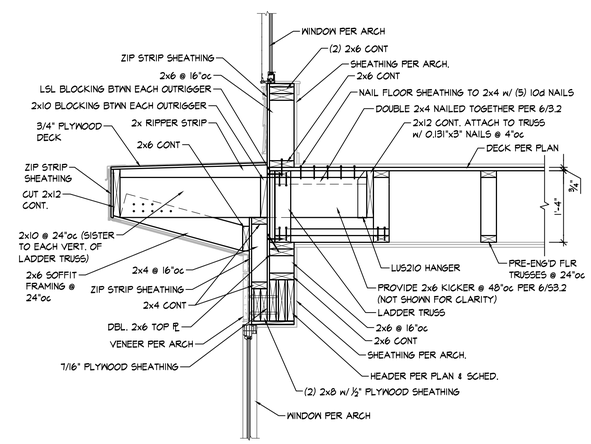

SECTION 7A — 3/4" = 1'-0" — 53.3

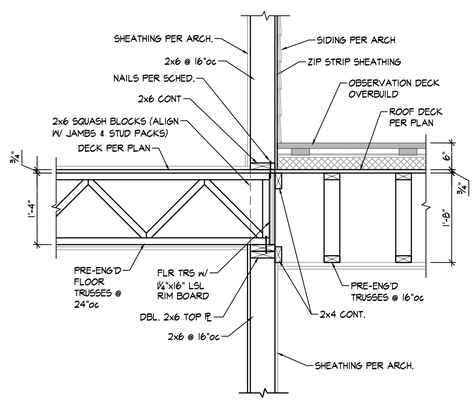

SECTION 8 — 3/4" = 1'-0" — 53.3

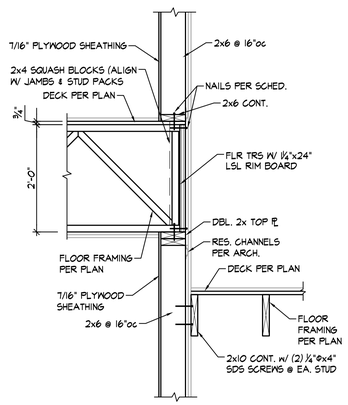

SECTION 9 — 3/4" = 1'-0" — 53.3

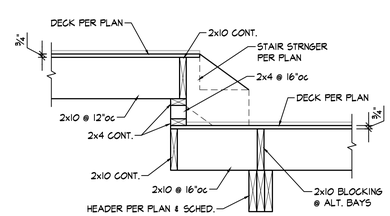

SECTION 10 — 3/4" = 1'-0" — 53.3

JonesGillamRenz
730 N. Ninth 1881 Main Street, Suite 301
Salina, KS 67401 Kansas City, MO 64108
785.827.0386 jgr@jgrarchitects.com

ANDOVER SENIOR LIVING

NEW APARTMENTS

ANDOVER, KANSAS

MICHAEL J. FALDYN — LICENSED — 10296 — 1-3-2025 — KANSAS PROFESSIONAL ENGINEER

REVISION:

DATE: 1-03-2025
JOB: 24-3385
SHEET NO.:

S3.3

BOB D. CAMPBELL & CO.
Structural Engineers Since 1957
4338 Belleview Ave. 816.531.4144
Kansas City, MO 64111 www.bdc-engrs.com

COPYRIGHT©

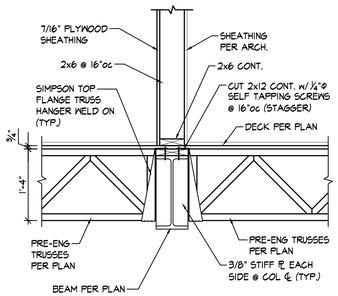

SECTION 1 — ¾" = 1'-0" — 53.4

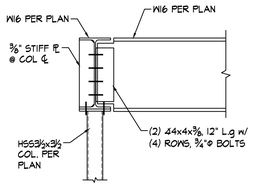

SECTION 2 — ¾" = 1'-0" — 53.4

NOTE: WOOD FRAMING OMITTED FOR CLARITY.

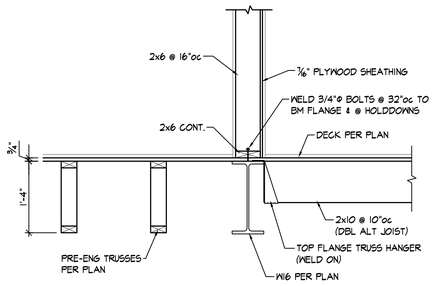

SECTION 3 — ¾" = 1'-0" — 53.4

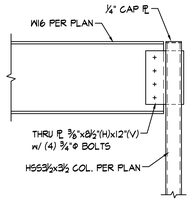

SECTION 4 — ¾" = 1'-0" — 53.4

NOTE: WOOD FRAMING OMITTED FOR CLARITY.

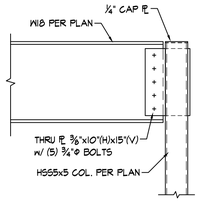

SECTION 5 — ¾" = 1'-0" — 53.4

NOTE: WOOD FRAMING OMITTED FOR CLARITY.

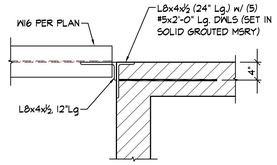

DETAIL 6 — ¾" = 1'-0" — 53.4

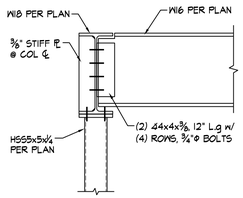

SECTION 7 — ¾" = 1'-0" — 53.4

NOTE: WOOD FRAMING OMITTED FOR CLARITY.

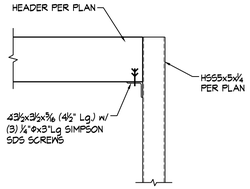

SECTION 8 — ¾" = 1'-0" — 53.4

NOTE: WOOD FRAMING OMITTED FOR CLARITY.

Wichita-Sedgwick County
Metropolitan Area Building
and Construction Department

REVIEWED FOR CODE COMPLIANCE

CORRECTIONS OR COMMENTS MADE ON THESE DRAWINGS AND THIS DOCUMENT DURING THIS REVIEW DO NOT RELIEVE CONTRACTOR FROM COMPLIANCE WITH ALL REQUIREMENTS OF THE CODE OF THE MABCD, THE CITY OF WICHITA OR SEDGWICK COUNTY. THIS REVIEW IS ONLY FOR GENERAL CONFORMANCE OF THE CODE. THE CONTRACTOR IS RESPONSIBLE FOR CONFORMING AND CORRELATING ALL TECHNIQUES OF CONSTRUCTION. THIS APPROVAL IS SUBJECT TO PROVISIONS OF SECTION 107.4 OF THE 2012 INTERNATIONAL BUILDING CODE.

DATE: 02/19/25 BY: William Jerauld Jr

JonesGillamRenz
730 N. Ninth 1881 Main Street, Suite 301
Salina, KS 67401 Kansas City, MO 64108
785.827.0386 jgr@jgrarchitects.com

ANDOVER SENIOR LIVING

NEW APARTMENTS

ANDOVER, KANSAS



REVISION:

DATE: 1-03-2025

JOB: 24-3385

SHEET NO.:

S3.4

BOB D. CAMPBELL & CO.
Structural Engineers Since 1957
4338 Belleview Ave. 816.531.4144
Kansas City, MO 64111 www.bdc-engrs.com

COPYRIGHTED ©

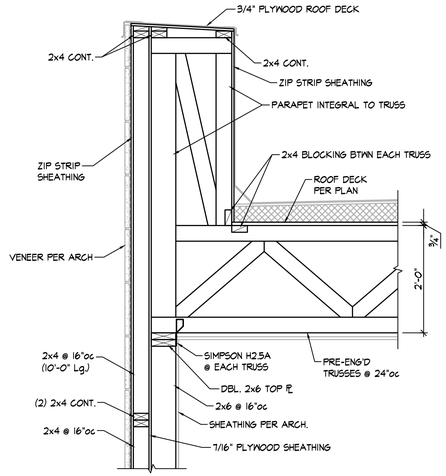

SECTION 1 — 3/4" = 1'-0" — S3.5

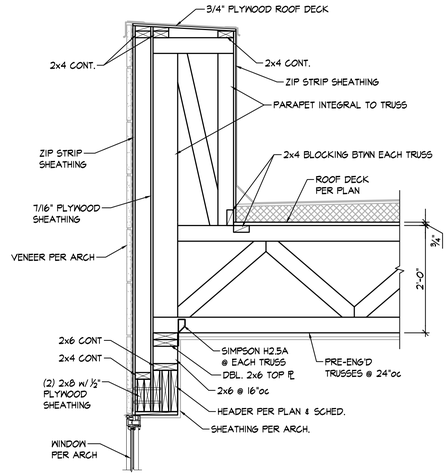

SECTION 1A — 3/4" = 1'-0" — S3.5

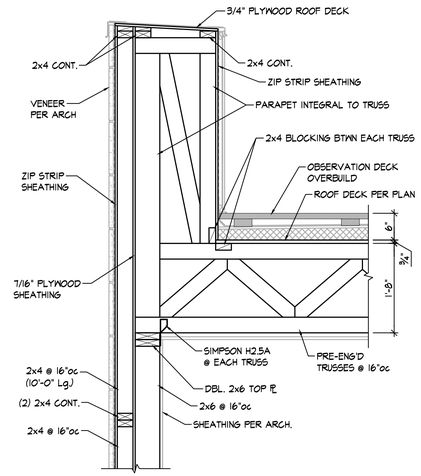

SECTION 2 — 3/4" = 1'-0" — S3.5

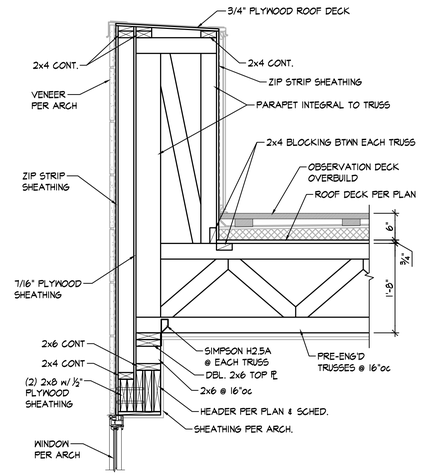

SECTION 2A — 3/4" = 1'-0" — S3.5

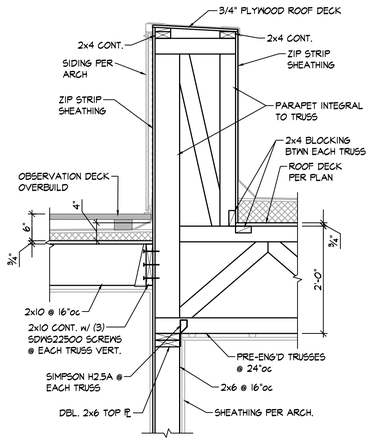

SECTION 3 — 3/4" = 1'-0" — S3.5

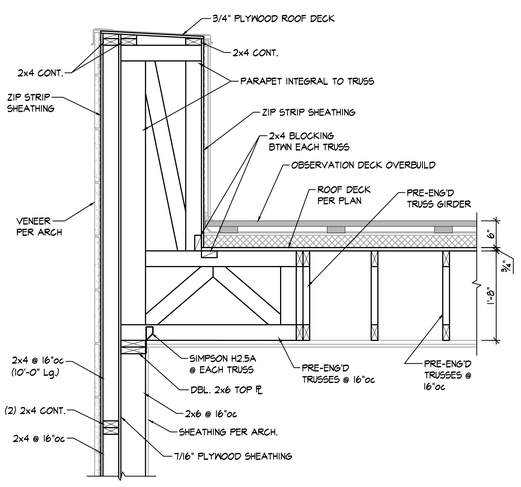

SECTION 4 — 3/4" = 1'-0" — S3.5

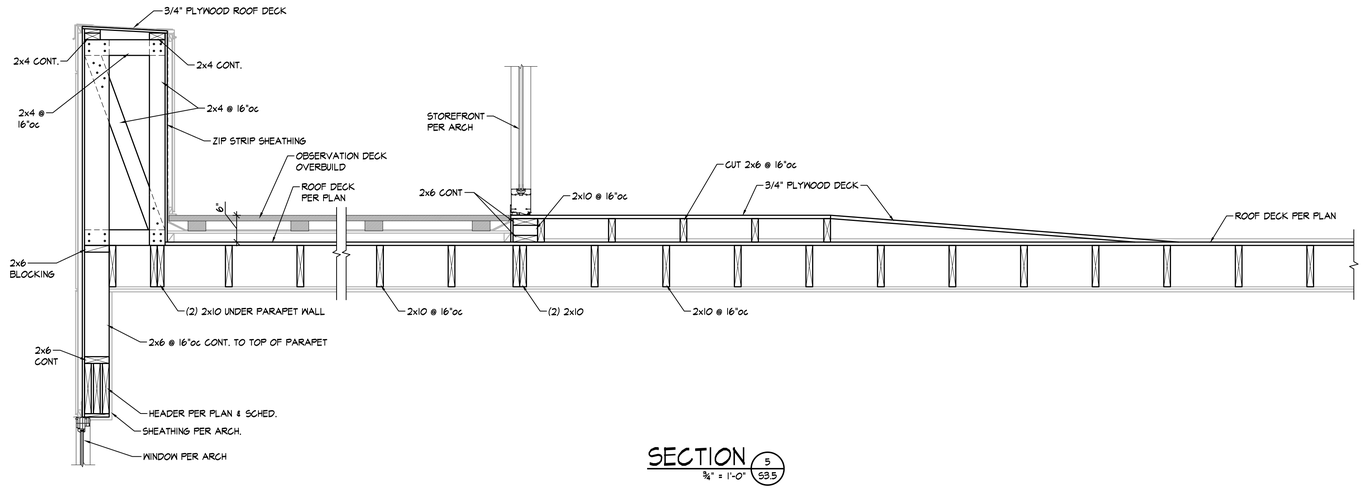

SECTION 5 — 3/4" = 1'-0" — S3.5

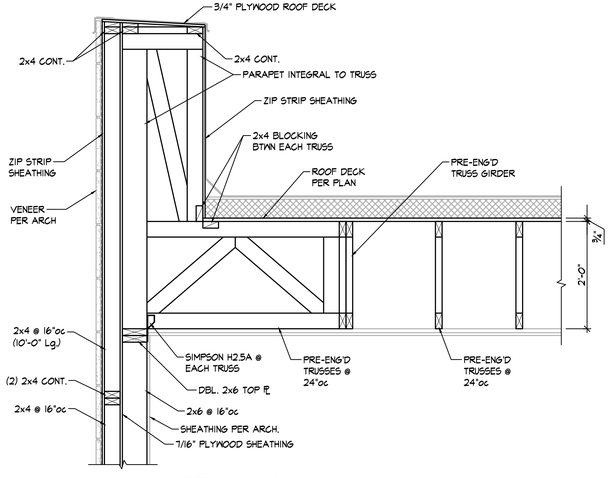

SECTION 6 — 3/4" = 1'-0" — S3.5

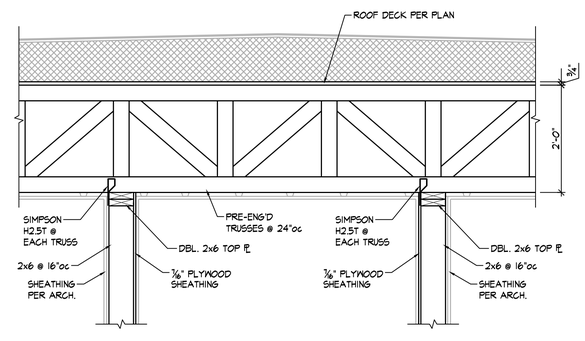

SECTION 7 — 3/4" = 1'-0" — S3.5

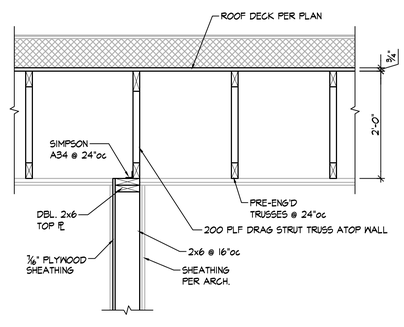

SECTION 8 — 3/4" = 1'-0" — S3.5

Wichita-Sedgwick County
Metropolitan Area Building
and Construction Department

REVIEWED FOR CODE COMPLIANCE

CORRECTIONS OR COMMENTS MADE ON THESE DRAWINGS AND THIS DOCUMENT DURING THIS REVIEW DO NOT RELIEVE CONTRACTOR FROM COMPLIANCE WITH ALL REQUIREMENTS OF THE CODE OF THE MABCD, THE CITY OF WICHITA OR SEDGWICK COUNTY. THIS REVIEW IS ONLY FOR GENERAL CONFORMANCE OF THE CODE. THE CONTRACTOR IS RESPONSIBLE FOR CONFORMING AND CORRELATING ALL TECHNIQUES OF CONSTRUCTION. THIS APPROVAL IS SUBJECT TO PROVISIONS OF SECTION 107.4 OF THE 2012 INTERNATIONAL BUILDING CODE.

DATE: 02/19/25 BY: William Jerauld Jr

JonesGillamRenz
730 N. Ninth 1881 Main Street, Suite 301
Salina, KS 67401 Kansas City, MO 64108
785.827.0386 jgr@jgrarchitects.com

ANDOVER SENIOR LIVING

NEW APARTMENTS

ANDOVER, KANSAS

MICHAEL J. FALZ
LICENSED
10296
1-3-2025
KANSAS
PROFESSIONAL ENGINEER

REVISION:

DATE: 1-03-2025
JOB: 24-3385
SHEET NO.:

S3.5

BOB D. CAMPBELL & CO.
Structural Engineers Since 1957
4338 Belleview Ave. 816.531.4144
Kansas City, MO 64111 www.bdc-engrs.com

COPYRIGHT©

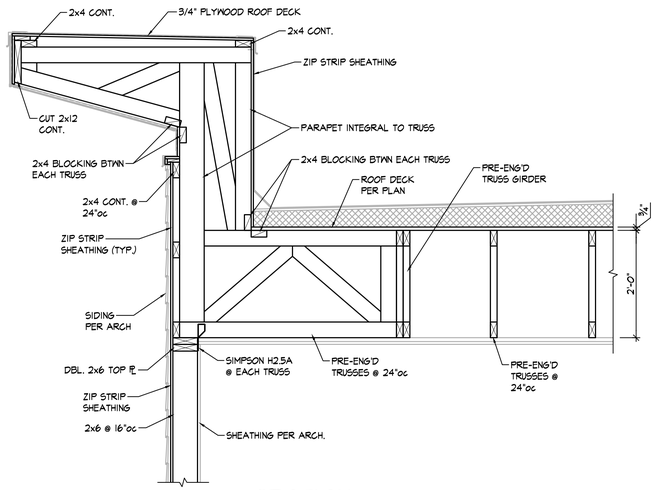

SECTION 1 S3.6
3/4" = 1'-0"

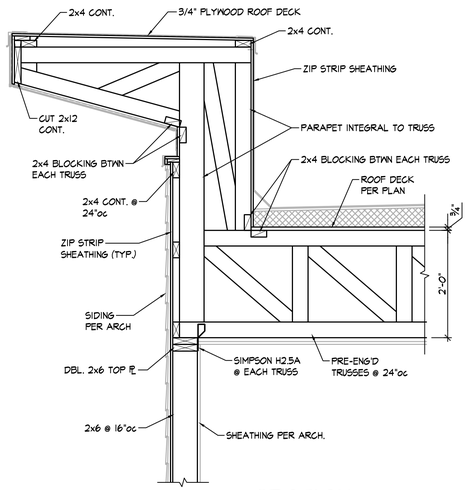

SECTION 2 S3.6
3/4" = 1'-0"

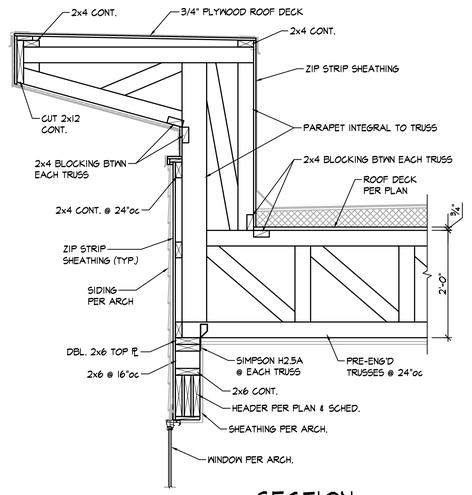

SECTION 2A S3.6
3/4" = 1'-0"

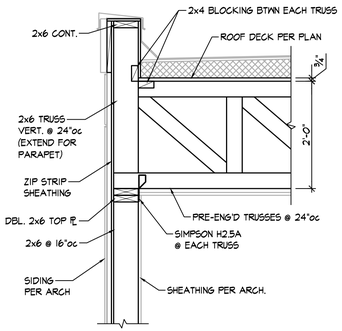

SECTION 3 S3.6
3/4" = 1'-0"

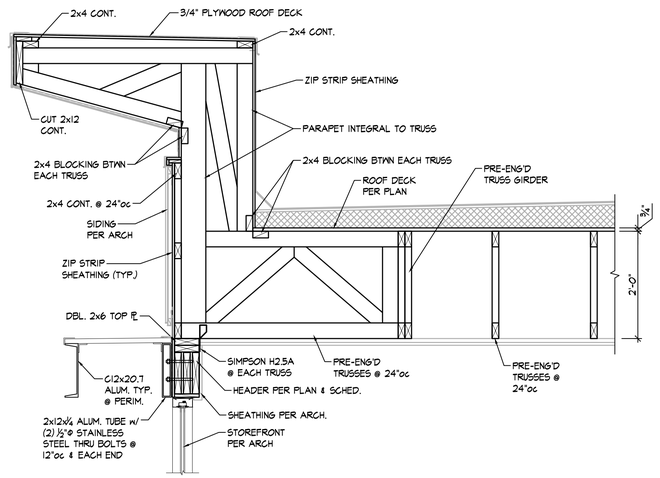

SECTION 4 S3.6
3/4" = 1'-0"

Wichita-Sedgwick County
Metropolitan Area Building
and Construction Department

REVIEWED FOR CODE COMPLIANCE

CORRECTIONS OR COMMENTS MADE ON THESE DRAWINGS AND THIS DOCUMENT DURING THIS REVIEW DO NOT RELIEVE CONTRACTOR FROM COMPLIANCE WITH ALL REQUIREMENTS OF THE CODE OF THE MARCH, THE CITY OF WICHITA OR SEDGWICK COUNTY. THIS REVIEW IS ONLY FOR GENERAL CONFORMANCE OF THE CODE. THE CONTRACTOR IS RESPONSIBLE FOR CONFORMING AND CORRELATING ALL TECHNIQUES OF CONSTRUCTION. THIS APPROVAL IS SUBJECT TO PROVISIONS OF SECTION 107.4 OF THE 2012 INTERNATIONAL BUILDING CODE.

DATE: 02/19/25 BY: William Jerauld Jr

JonesGillamRenz
730 N. Ninth 1881 Main Street, Suite 301
Salina, KS 67401 Kansas City, MO 64108
785.827.0386 jgr@jgrarchitects.com

ANDOVER SENIOR LIVING

NEW APARTMENTS

ANDOVER, KANSAS

MICHAEL J. FALL LICENSED 10290 1-3-2025 KANSAS PROFESSIONAL ENGINEER

REVISION:

DATE: 1-03-2025
JOB: 24-3385
SHEET NO.:

S3.6

BOB D. CAMPBELL & CO.
Structural Engineers Since 1957
4338 Belleview Ave. 816.531.4144
Kansas City, MO 64111 www.bdc-engrs.com

COPYRIGHTED ©

Electrical Abbreviations

Abbreviation	Meaning
1P	1 Pole (2P, 3P, 4P, ETC.)
A, Amp	Ampere
AC	Above Counter
ACLG	Above Ceiling
ADO	Automatic Door Opener
AF	Amp Frame
AFF	Above Finished Floor
AFG	Above Finished Grade
AFI	Arc Fault Circuit Interrupter
AHU	Air Handling Unit
AL	Aluminum
ALT	Alternate
AMP	Ampere
AMPL	Amplifier
ANNUN	Annunciator
APPROX	Approximately
AQ-STAT	Aquastat
ARCH	Architect, Architectural
AS	Amp Switch
AT	Amp Trip
ATS	Automatic Transfer Switch
AUTO	Automatic
AUX	Auxiliary
AV	Audio Visual
AWG	American Wire Gauge
BATT	Battery
BD	Board
BLDG	Building
BMS	Building Management System
C	Conduit
CAB	Cabinet
CAT	Catalog
CATV	Cable Television
CB	Circuit Breaker
CCTV	Closed Circuit Television
CKT	Circuit
CLG	Ceiling
COMB	Combination
CMPR	Compressor
CONN	Connection
CONST	Construction
CONT	Continuation Or Continuous
CONTR	Contractor
CONV	Convector
CP	Circulating Pump
CRT	Cathode-Ray Tube
CT	Current Transformer
CTR	Center
CU	Copper
DCP	Domestic Water Circulating Pump
DEPT	Department
DET	Detail
DIA	Diameter
DISC	Disconnect
DIST	Distribution
DN	Down
DPR	Damper
DS	Safety Disconnect Switch
DT	Double Throw
DWG	Drawing
EC	Electrical Contractor
ELEC	Electric, Electrical
ELEV	Elevator
ELU	Emergency Lighting Unit
EM	Emergency
EMS	Energy Management System
EMT	Electrical Metallic Tubing
EP	Electric Pneumatic
EQUIP	Equipment
EWC	Electric Water Cooler
EXIST	Existing
EXH	Exhaust
EXP	Explosion Proof
FA	Fire Alarm
FABP	Fire Alarm Booster Power Supply Panel
FACP	Fire Alarm Control Panel
FCU	Fan Coil Unit
FIXT	Fixture
FLR	Floor
FLUOR	Fluorescent
FU	Fuse
FUDS	Fused Safety Disconnect Switch
GA	Gauge
GAL	Gallon
GALV	Galvanized
GC	General Contractor
GEN	Generator
GFI	Ground Fault Circuit Interrupter
GFP	Ground Fault Protector
GND	Ground
GRS	Galvanized Rigid Steel (Conduit)
GYP BD	Gypsum Board
HOA	Hands-Off-Automatic Switch
HORIZ	Horizontal
HP	Horsepower
HPF	High Power Factor
HT	Height
HTG	Heating
HTR	Heater
HV	High Voltage
HVAC	Heating, Ventilating And Air Conditioning
IC	Interrupting Capacity
IG	Isolated Ground
IMC	Intermediate Metal Conduit
INCAND	Incandescent
IR	Infrared
I/W	Interlock With
J-BOX	Junction Box
KV	Kilovolt
KVA	Kilovolt-Ampere
KVAR	Kilovolt-Ampere Reactive
KW	Kilowatt
KWH	Kilowatt Hour
LOC	Locate Or Location
LT	Light
LTG	Lighting
LTNG	Lightning
LV	Low Voltage
MAX	Maximum
MAG.S	Magnetic Starter
M/C	Momentary Contact
MC	Mechanical Contractor

Abbreviation	Meaning
MCB	Main Circuit Breaker
MCC	Motor Control Center
MDC	Main Distribution Center
MDP	Main Distribution Panel
MFR	Manufacturer
MFS	Main Fused Disconnect Switch
MH	Manhole
MIC	Microphone
MIN	Minimum
MISC	Miscellaneous
MLO	Main Lugs Only
MMS	Manual Motor Starter
MOA	Multioutlet Assembly
MSP	Motor Starter Panelboard
MSBD	Main Switchboard
MSS	Motor Starter Switch
MT	Mount
MT.C	Empty Conduit
MTS	Manual Transfer Switch
MTR	Motor, Motorized
N.C.	Normally Closed
NEC	National Electrical Code
NEMA	National Electrical Manufacturer's Association
NFDS	Non-Fused Safety Disconnect Switch
NIC	Not In Contract
NL	Night Light
N.O.	Normally Open
NPF	Normal Power Factor
NTS	Not To Scale
OC	On Center
OH	Overhead
OL	Overloads
PA	Public Address
PB	Pull Box Or Pushbutton
PE	Pneumatic Electric
PED	Pedestal
PF	Power Factor
PH	Phase
PIV	Post Indicating Valve
PNL	Panel
PP	Power Pole
PR	Pair
PRI	Primary
PROJ	Projection
PRV	Power Roof Ventilator
PT	Potential Transformer
PVC	Polyvinyl Chloride (Conduit)
PWR	Power
QUAN	Quantity
RCPT	Receptacle
REQD	Required
RM	Room
RSC	Rigid Steel Conduit
RTU	Roof Top Unit
SC	Surface Conduit
SEC	Secondary
SHT	Sheet
SIM	Similar
SLD	Single-Line Diagram
S/N	Solid Neutral
SPEC	Specification
SPKR	Speaker
SP	Spare
SPP	Single-Point Power
SR	Surface Raceway
SS	Stainless Steel
SSW	Selector Switch
S/S	Stop/Start Pushbuttons
STA	Station
STD	Standard
SURF	Surface Mounted
SW	Switch
SWBD	Switchboard
SYM	Symmetrical
SYS	System
TEL	Telephone
TERM	Terminal
TL	Twist Lock
TR	Tamper Resistant
T-STAT	Thermostat
TTC	Telephone Terminal Cabinet
TV	Television
TVTC	Television Terminal Cabinet
TYP	Typical
UC	Under Counter
UE	Underground Electrical
UG	Underground
UH	Unit Heater
UT	Underground Telephone
UTIL	Utility
UV	Ultraviolet
V	Volt
VA	Volt-Amperes
VDT	Video Display Terminal
VERT	Vertical
VFD	Variable Frequency Drive
VOL	Volume
W	Watt
W/	With
WG	Wire Guard
WH	Water Heater
W/O	Without
WP	Weatherproof
XFMR	Transformer
XFR	Transfer
∠	Angle
@	At
▲	Delta
'	Feet
"	Inches
#	Number
Ø	Phase
C	Center Line
P	Plate

Electrical Symbol Legend

Lighting Symbols

- Lighting Fixtures, Typical, Rectangular (Various Symbols)
- Lighting Fixtures, Typical, Round (Various Symbols) Center dot indicates pendant. Chevron indicates wall wash.
- Wall-mounted fixtures, Typical (Various Symbols)
- Strip Fixture
- Directional Light, Track Light, Flood Light
- Linear Light, Tape Light
- Emergency Lighting Unit, Ceiling-Mounted, Integral Battery
- Emergency Lighting Unit, Ceiling-Mounted, Remote Battery
- Emergency Lighting Unit, Wall-Mounted, Integral Battery
- Emergency Lighting Unit, Wall-Mounted, Remote Battery
- Exit Light, Ceiling-Mounted. Shading and arrows indicate faces and directional chevrons.
- Exit Light, Wall-Mounted. Shading and arrows indicate faces and directional chevrons.
- Exit/ELU Combo
- Pole/Area Lights
- Post-Top Area Light
- Bollard Light
- Hatch indicates light on an emergency or life safety circuit.
- $ Single-Pole Switch
- $ Two-Pole Switch
- $ Three-Pole Switch

Switch Modifiers:

3: 3-Way	OS: Occupancy Sensor
4: 4-Way	VS: Vacancy Sensor
K: Keyed	CT: Above-Counter
D: Dimming	LV: Low-Voltage
T: Timer	M: Motor-Rated

- Lighting Contactor
- LC Lighting Control Panel
- OS Occupancy Sensor
- DL Daylight Harvesting Sensor

Lighting Tags

A
MDP:1a

- Top Value: Fixture Type ID (Underlined)
- Bottom Value, Lowercase Letter: Switch ID
- Bottom Value, Number(s): Circuit Number
- Bottom Value, Uppercase Letter(s): Panel

Absence of a switch designation on a lighting fixture indicates fixture is controlled by the only switch in the space. An "x" in place of the switch designation indicates unswitched.

Switch ID indicated by a lowercase letter. Switch IDs are unique per space. A switch with an ID "a" controls all devices within the space in which it is located tagged with "a". A switch without a tagged ID controls all lighting fixtures within a space. ID tags may be used on control devices other than switches, such as occupancy sensors or contactors.

Miscellaneous

- Area Not in Contract
- # Note by Symbol
- Callout: Top Value: Detail Number on Sheet; Bottom Value: Sheet Number of Detail
- Room 1 — Room Name and Number

Power Symbols

Wall / Ceiling / Floor

- Simplex Receptacle
- Duplex Receptacle
- Quadruplex Receptacle
- 6-30 Special Receptacle, Type as Indicated

Receptacle Modifiers:
- ##": Height AFF(to center)
- CT: Device Mounted Above Counter Top
- IG: Isolated Ground
- H: Device Mounted Horizontally
- WP: Weatherproof In-Use Cover

- Half shading indicates split (typically switched)
- Outside shading indicates tamperproof device
- Center shading indicates GFI type
- Full shading indicates tamperproof GFI type
- Multioutlet Assembly. Filled squares indicate 120V outlet. Open squares indicate with USB
- Cord Reel, Device Varies
- Drop Cord, Device Varies
- J Junction Box
- F1 Floor Box, see schedule for type
- Emergency Power Off
- DO Door Opener Push Plate
- M Power Meter
- Safety Switch, Fused
- Safety Switch, Unfused
- Motor Starter
- Combination Starter/Disconnect
- Contactor

Power Device and Equipment Tags

LP1A:1 — Electrical DeviceTags: Uppercase letter(s) indicates Panel ID and circuit number. Lowercase letter indicates designation of controlling switch (where applicable).

XX-1 — Equipment Tags: Equipment ID is indicated by an underlined tag adjacent to the equipment. See the equipment connection schedule for description, electrical requirements, and panel and circuit number. Symbols/graphic appearance of equipment varies.

Wiring

Solid, arced lines connecting equipment, devices, or fixtures indicate unswitched power circuiting. Wires are only intended to indicate to what circuit devices are connected. Actual connections, circuit routing, installtion, junction boxes, etc. shall be field-determined by the contractor.

Dashed, arced lines connecting equipment, devices, or fixtures indicate switched power.

Home run to branch circuit panelboard. The equipment name and circuit number(s) are indicated, separated by a hyphen. Homeruns are only intended to indicate panel and circuit number. Actual homerun location shall be field-determined by the contractor.

Power Distribution Equipment

SB1 MDP HP1A LP1A

Hatched fill indicates distribution panel or switchboard.
Solid fill indicates branch panel or load center.
Dashed box indicates code-required clearance (width and depth).
Door indicates front of recessed panel.

Devices and fixtures are tagged with Panel and circuit number. For example, a device tagged with "A:1" indicates the device is circuited to panel designated "A," circuit number 1.

T1 — Transformer: Typically transformer names begin with or contain the letter "T". See Single-Line Diagram for description and requirements.

Telecom Symbols

Wall / Ceiling / Floor

- Data Outlet
- Telephone Outlet
- Data/Telephone Outlet

Outlet Modifiers:
- ##": Height AFF (to center)
- CT: Mounted Above Counter Top

- Wireless Access Point
- 84" TV TV Outlet

GENERAL ELECTRICAL NOTES

A. COORDINATE INSTALLATION OF ELECTRICAL WORK ABOVE THE CEILING TO PROVIDE THE GREATEST POSSIBLE CLEARANCE FOR INSTALLATION OF PLUMBING AND MECHANICAL INSTALLATION. CONDUITS SHALL BE ROUTED THROUGH JOIST WEBS WHERE POSSIBLE.
B. VERIFY EXACT PLACEMENT OF ALL LUMINAIRES, DEVICES, AND EQUIPMENT SHOWN ON THE ELECTRICAL CONSTRUCTION DOCUMENTS WITH ARCHITECTURAL, MECHANICAL AND PLUMBING DRAWINGS PRIOR TO FINAL PLACEMENT.
C. ELECTRICAL EQUIPMENT AND DEVICES SHALL BE "LISTED" AND "IDENTIFIED" AS RATED FOR A MINIMUM OF 75°C CONDUCTOR TERMINATION.
D. DEFINITION OF TERMS

"SHALL":	ACTION THAT IS REQUIRED WITHOUT OPTION OR QUALIFICATION.
"FURNISH":	CONTRACTOR SHALL BE RESPONSIBLE FOR OBTAINING.
"INSTALL":	CONTRACTOR SHALL BE RESPONSIBLE FOR LABOR AND CONSTRUCTION EQUIPMENT NECESSARY TO SET IN PLACE, CONNECT, CALIBRATE AND TEST EQUIPMENT FURNISHED BY HIM OR OTHERS.
"PROVIDE":	CONTRACTOR SHALL FURNISH AND INSTALL.

MOUNTING HEIGHT REQUIREMENTS:

UNLESS SPECIFICALLY INDICATED OTHERWISE, THE FOLLOWING MOUNTING HEIGHTS SHALL APPLY:

• RECEPTACLES	16" TO BOTTOM
• TELECOMMUNICATIONS OUTLETS	16" TO BOTTOM
• LIGHT SWITCHES	48" TO TOP
• THERMOSTATS	48" TO TOP
• HUMIDISTATS	48" TO TOP
• FIRE ALARM PULL STATIONS	48" TO TOP
• FIRE ALARM NOTIFICATION DEVICES	LOWER OF: 88" TO BOTTOM OR TOP AT 6" BELOW CEILING

GENERAL LIGHTING NOTES

A. THE CIRCUITING OF ALL LUMINAIRES HAS BEEN SHOWN ON THE PLANS, AND THE CONTRACTOR SHALL FOLLOW THIS CIRCUITING LAYOUT.
B. CIRCUIT ALL EMERGENCY LIGHTS, NIGHT LIGHTS AND EXIT LIGHTS TO AN UNSWITCHED HOT CONDUCTOR, UPSTREAM OF ALL CONTROLS.
C. DIRECT CURRENT POWER WIRING FROM EXIT SIGNS TO REMOTE EXTERIOR EMERGENCY LIGHTING HEADS SHALL BE (2) #10 IN 1/2" CONDUIT UNLESS NOTED OTHERWISE.
D. IN AREAS WHERE CEILING MOUNTED OCCUPANCY SENSORS ARE USED FOR LIGHTING CONTROL IN CONJUNCTION WITH WALL SWITCHES, OCCUPANCY SENSOR/POWER PACK SHALL SWITCH LEG SHALL BE WIRED IN SERIES WITH WALL SWITCHES TO PROVIDE OVERRIDE "OFF" CONTROL FOR LIGHTS.
E. CONTROL WIRING FOR 0-10 V-dc DIMMING SIGNAL CIRCUITS SHALL BE NEC CLASS 1, ROUTED IN SAME RACEWAY/CABLE WITH LIGHTING CIRCUIT POWER CONDUCTORS. WIRING SHALL CONSIST OF (2) #16 SOLID CU THHN OR TFN CONDUCTORS. CONDUCTOR INSULATION COLOR SHALL BE VIOLET (+ V-dc) AND PINK (- V-dc). WHERE MC-CABLE IS USED FOR FINAL 6' POWER CONNECTION WHIP TO LUMINAIRE, UTILIZE "LUMINARY" TYPE MC-CABLE WITH INTEGRAL CLASS 1 CONTROL WIRING.

GENERAL POWER NOTES

A. THE CIRCUITING OF ALL DEVICES HAS BEEN SHOWN ON THE PLANS, AND THE CONTRACTOR SHALL FOLLOW THIS CIRCUITING LAYOUT.
B. VERIFY EXACT LOCATIONS OF HVAC AND PLUMBING EQUIPMENT WITH THE GENERAL CONTRACTOR AND ASSOCIATED SUBCONTRACTORS. COORDINATE CONDUIT STUB-UP AND POWER CONNECTIONS PRIOR TO COMMENCING ROUGH-IN WORK. ELECTRICAL DEVICES (DISCONNECTS, RECEPTACLES, ETC.) INSTALLED ON EQUIPMENT SHALL BE MOUNTED ON A NON-REMOVABLE PANEL OF THE EQUIPMENT. FIELD COORDINATE EXACT DEVICE MOUNTING LOCATIONS PRIOR TO INSTALLATION.
C. WALL MOUNTED HVAC CONTROL DEVICES (THERMOSTATS, TEMPERATURE SENSORS, HUMIDISTATS, CO_2 SENSORS, ETC) SHALL BE PROVIDED BY MECHANICAL CONTRACTOR. UNLESS NOTED OTHERWISE, ELECTRICAL CONTRACTOR SHALL PROVIDE SINGLE GANG WALL BOX WITH 1/2" CONDUIT STUBBED OUT TO ABOVE ACCESSIBLE CEILING WITH NYLON BUSHINGS AND PULLSTRING IN RACEWAY. REFER TO MECHANICAL DRAWINGS FOR LOCATIONS OF DEVICES.

GENERAL TELECOMMUNICATIONS NOTES

A. PROVIDE THE FOLLOWING RACEWAY ROUGH-IN FOR TELECOMMUNICATIONS OUTLET TYPES INDICATED:
   - WALL PHONE OUTLET: 2"x4"x2-1/8" DEEP DEVICE BOX WITH (1) 3/4" CONDUIT TO ABOVE ACCESSIBLE CEILING.
   - PHONE/DATA OUTLET: 4-11/16" SQUARE x 3-1/4" DEEP BOX (RACO #260 OR EQUAL) WITH 1-GANG DEVICE RING AND 1-1/4" CONDUIT TO ABOVE ACCESSIBLE CEILING.
   - TV OUTLET: 4-11/16" SQUARE x 3-1/4" DEEP BOX (RACO #260 OR EQUAL) WITH 2-GANG DEVICE RING AND (1) 2" CONDUIT TO ABOVE ACCESSIBLE CEILING.
B. PROVIDE NYLON BUSHINGS FOR ALL CONDUIT ENDS NOT CONNECTED TO A BOX OR FITTING TO PROTECT CABLING FROM DAMAGE.
C. CONDUITS FROM EACH OUTLET SHALL BE STUBBED 2" ABOVE THE FINISHED CEILINGS IN AREAS WITH ACCESSIBLE TILES. IN AREAS WITH OPEN CEILINGS, STUB CONDUIT INTO STRUCTURAL JOIST SPACE.
D. PROVIDE BLANK, STAINLESS STEEL COVER PLATES FOR ALL OUTLETS NOT ACTIVATED BY OWNER.
E. PROVIDE SUITABLE PULL STRING IN ALL CONDUITS.

GENERAL FIRE ALARM NOTES

A. FIRE ALARM CABLING SHALL BE INSTALLED IN CONDUIT WHERE EXPOSED, INACCESSIBLE, AND WHERE SUBJECT TO PHYSICAL DAMAGE.
B. AT LOCATION OF SMOKE DAMPERS AND COMBINATION FIRE/SMOKE DAMPERS, PROVIDE DUCT OR AREA SMOKE DETECTOR (AS SHOWN ON PLANS) WITHIN 5' OF DAMPER AND WIRE TO FIRE ALARM CONTROL PANEL. PROVIDE FIRE ALARM RELAY FOR CONTROL OF 120V POWER TO DAMPER ACTUATOR. DAMPER SHALL CLOSE UPON DETECTION OF SMOKE.
C. IN ADDITION TO VALVES INSTALLED ON FIRE SPRINKER SYSTEM RISER, ALL VALVES INSTALLED OUTSIDE THE BUILDING (POST INDICATOR VALVE, TAPPING SLEEVE VALVE, ETC.) SHALL BE SUPERVISED BY THE FIRE ALARM SYSTEM. PROVIDE ADDRESSABLE MONITORING MODULE AND SURGE PROTECTION DEVICE (DITEK #DTK-2MHLP48B) FOR EACH MONITORED VALVE. COORDINATE WITH GC AND SITE WORK CONTACTOR FOR ALL VALVES INSTALLED. MONITORING IS NOT REQUIRED FOR VALVES INSTALLED IN ROADWAY BOXES BY THE MUNICIPALITY/PUBLIC UTILITY.

Wichita-Sedgwick County
Metropolitan Area Building
and Construction Department

REVIEWED FOR CODE COMPLIANCE

CORRECTIONS OR COMMENTS MADE ON THESE DRAWINGS AND THIS DOCUMENT DURING THIS REVIEW DO NOT RELIEVE CONTRACTOR FROM COMPLIANCE WITH ALL REQUIREMENTS OF THE CODE OF THE MABCD, THE CITY OF WICHITA OR SEDGWICK COUNTY. THIS REVIEW IS ONLY FOR GENERAL CONFORMANCE OF THE CODE. THE CONTRACTOR IS RESPONSIBLE FOR CONFORMING AND CORRELATING ALL TECHNIQUES OF CONSTRUCTION. THIS APPROVAL IS SUBJECT TO PROVISIONS OF SECTION 107.4 OF THE 2012 INTERNATIONAL BUILDING CODE.

DATE: 02/19/25 BY: William Jerauld Jr

Electrical Sheet List

E1.1	ELECTRICAL PLANS
E1.2	ELECTRICAL PLANS
E1.3	SPECIAL SYSTEMS PLANS
E1.4	SPECIAL SYSTEMS PLANS
E4.1	ENLARGED ELECTRICAL PLANS
E4.2	ENLARGED ELECTRICAL PLANS
E6.1	ELECTRICAL SCHEDULES AND DETAILS
E6.3	ELECTRICAL SCHEDULES
E0.1	ELECTRICAL TITLE SHEET
E6.2	ELECTRICAL LOAD AND RISER DIAGRAMS

LST Consulting Engineers, PA
Manhattan, Kansas
785.587.8042

Wichita, Kansas
316.285.0696

www.LSTengineers.com
mail@LSTengineers.com

Project 24061

JGR JonesGillamRenz
730 N. Ninth
Salina, KS 67401
785.827.0386
1881 Main Street, Suite 301
Kansas City, MO 64108
jgr@jgrarchitects.com

THE RESIDENCE AT HERATIGE WEST

NEW SENIOR LIVING FACILITY

ANDOVER, KANSAS

RYAN PATRICK LIES
LICENSED
24155
KANSAS
PROFESSIONAL ENGINEER
2025.01.10
16:38:35-06'00'

REVISIONS:

DATE: 01-10-2025
JOB: 24-3379
SHEET NO.:

E0.1

COPYRIGHTED ©

Wichita-Sedgwick County
Metropolitan Area Building
and Construction Department

REVIEWED FOR CODE COMPLIANCE

CORRECTIONS OR COMMENTS MADE ON THESE DRAWINGS AND THIS DOCUMENT DURING THIS REVIEW DO NOT RELIEVE CONTRACTOR FROM COMPLIANCE WITH ALL REQUIREMENTS OF THE CODE OF THE MABCD, THE CITY OF WICHITA OR SEDGWICK COUNTY. THIS REVIEW IS ONLY FOR GENERAL CONFORMANCE OF THE CODE. THE CONTRACTOR IS RESPONSIBLE FOR CONFORMING AND CORRELATING ALL TECHNIQUES OF CONSTRUCTION. THIS APPROVAL IS SUBJECT TO PROVISIONS OF SECTION 107.4 OF THE 2012 INTERNATIONAL BUILDING CODE.

DATE: 02/19/25 BY: William Jerauld Jr

LST Consulting Engineers, PA
Manhattan, Kansas
785.587.8042

Wichita, Kansas
316.285.0696

www.LSTengineers.com
mail@LSTengineers.com
Project 24061

JonesGillamRenz
730 N. Ninth
Salina, KS 67401
785.827.0386
1881 Main Street, Suite 301
Kansas City, MO 64108
jgr@jgrarchitects.com

NOTES BY SYMBOL

1. ROUTE CIRCUIT THROUGH CONTACTOR INDICATED ON DETAIL 2:E6.1.
2. PROVIDE 30A/2P, SINGLE THROW, MANUAL MOTOR CONTROLLER SNAP SWITCH IN NEMA 1 ENCLOSURE. HUBBELL #HBL7832D OR EQUAL. MAKE FINAL FLEXIBLE CONNECTION TO BLOWER COIL/ELECTRIC HEAT.
3. CONNECT FIXTURE TO LIGHTING INVERTER IN MECH 105 FOR EMERGENCY OPERATION.
4. 120V POWER FOR FIRE SPRINKLER SYSTEM FLOW SWITCH(ES) AND BELL. PROVIDE #8 CU BONDING JUMPER FROM CIRCUIT EQUIPMENT GROUNDING CONDUCTOR TO METAL SPRINKLER SYSTEM PIPING AT AN ACCESSIBLE LOCATION PER NEC 250.104(B). COORDINATE WORK WITH FIRE SPRINKLER SYSTEM INSTALLER.
5. PROVIDE 120V POWER CONNECTION TO ELEVATOR SUMP PUMP ALARM PANEL AND 1" CONDUIT WITH PULL STRING STUBBED INTO ELEVATOR PIT FOR CONTROL CABLING. COORDINATE ALL WORK WITH PLUMBING CONTRACTOR.
6. PROVIDE 50A/2P, SINGLE THROW, MANUAL MOTOR CONTROLLER SNAP SWITCH IN NEMA 1 ENCLOSURE. HUBBELL #HBL7852D OR EQUAL. MAKE FINAL FLEXIBLE CONNECTION TO BLOWER COIL/ELECTRIC HEAT.
7. TIMECLOCK AND CONTACTORS FOR EXTERIOR LIGHTING AND OFFICE RECEPTACLE CONTROL, RE: 2:E6.1.
8. PHOTOCELL FOR CONTROL OF EXTERIOR LIGHTS. SEE 2:E6.1 FOR MORE INFORMATION.

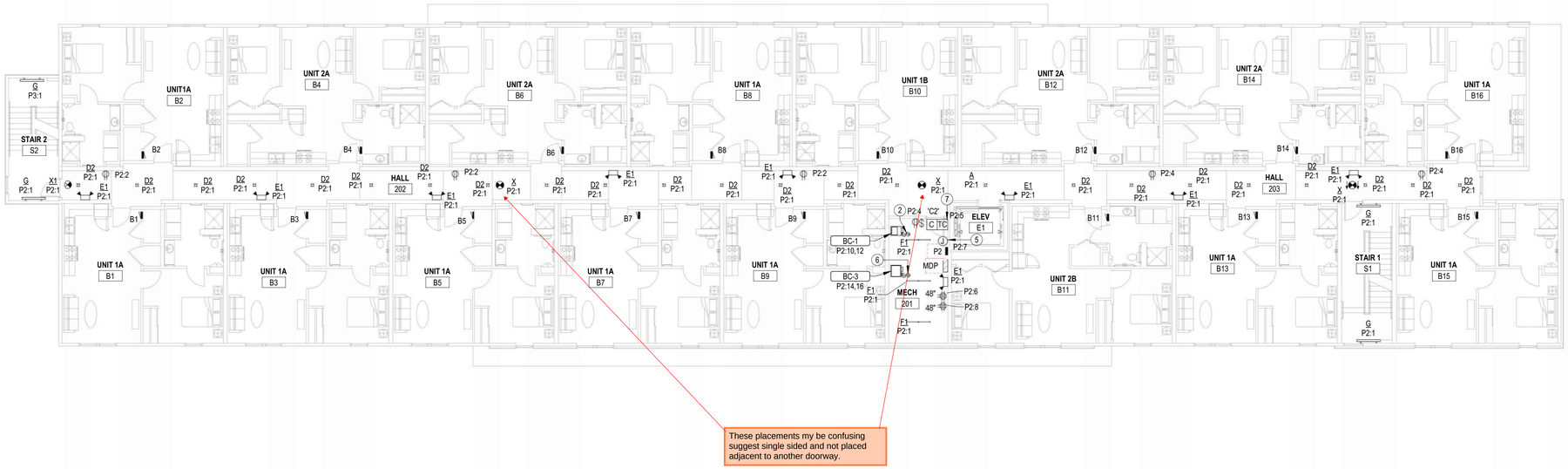

2 E1.1 SECOND FLOOR ELECTRICAL PLAN
3/32" = 1'-0"
0 8' 16' 24'

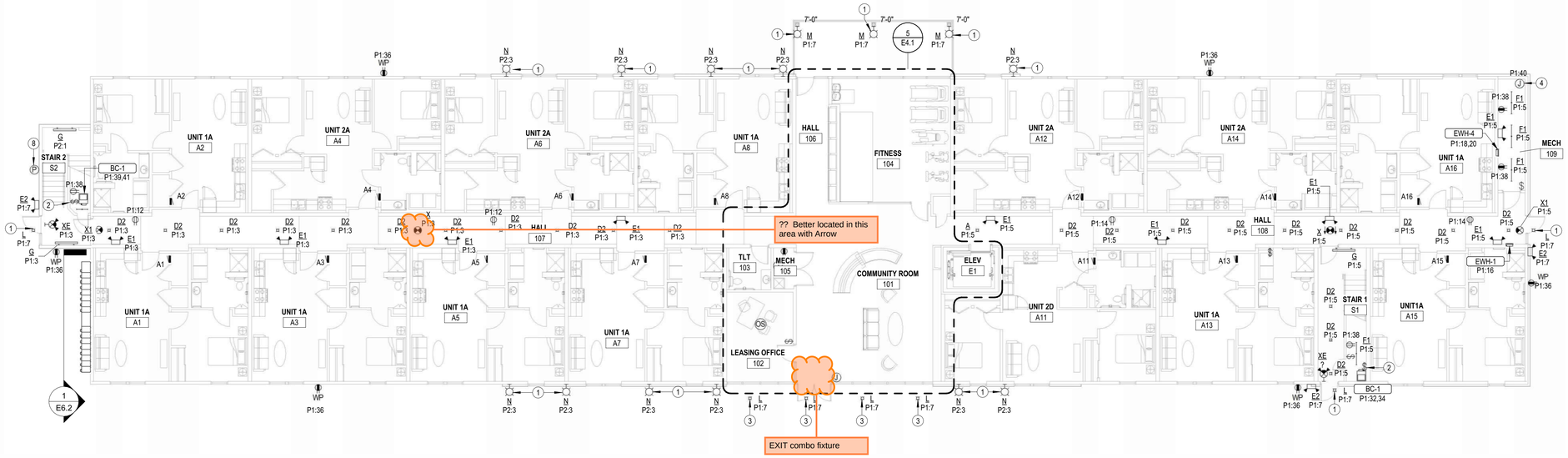

1 E1.1 FIRST FLOOR ELECTRICAL PLAN
3/32" = 1'-0"
0 8' 16' 24'

THE RESIDENCE AT HERATIGE WEST
NEW SENIOR LIVING FACILITY
ANDOVER, KANSAS

RYAN PATRICK LIES
LICENSED
24155
KANSAS
PROFESSIONAL ENGINEER
2025-01-10
16:38:55-06'00'

REVISIONS:

DATE: 01-10-2025
JOB: 24-3379
SHEET NO.:

E1.1

COPYRIGHTED ©

Wichita-Sedgwick County
Metropolitan Area Building
and Construction Department

REVIEWED FOR CODE COMPLIANCE

CORRECTIONS OR COMMENTS MADE ON THESE DRAWINGS AND THIS DOCUMENT DURING THIS REVIEW DO NOT RELIEVE CONTRACTOR FROM COMPLIANCE WITH ALL REQUIREMENTS OF THE CODE OF THE MABCD, THE CITY OF WICHITA OR SEDGWICK COUNTY. THIS REVIEW IS ONLY FOR GENERAL CONFORMANCE OF THE CODE. THE CONTRACTOR IS RESPONSIBLE FOR CONFORMING AND CORRELATING ALL TECHNIQUES OF CONSTRUCTION. THIS APPROVAL IS SUBJECT TO PROVISIONS OF SECTION 107.4 OF THE 2012 INTERNATIONAL BUILDING CODE.

DATE: 02/19/25 BY: William Jerauld Jr

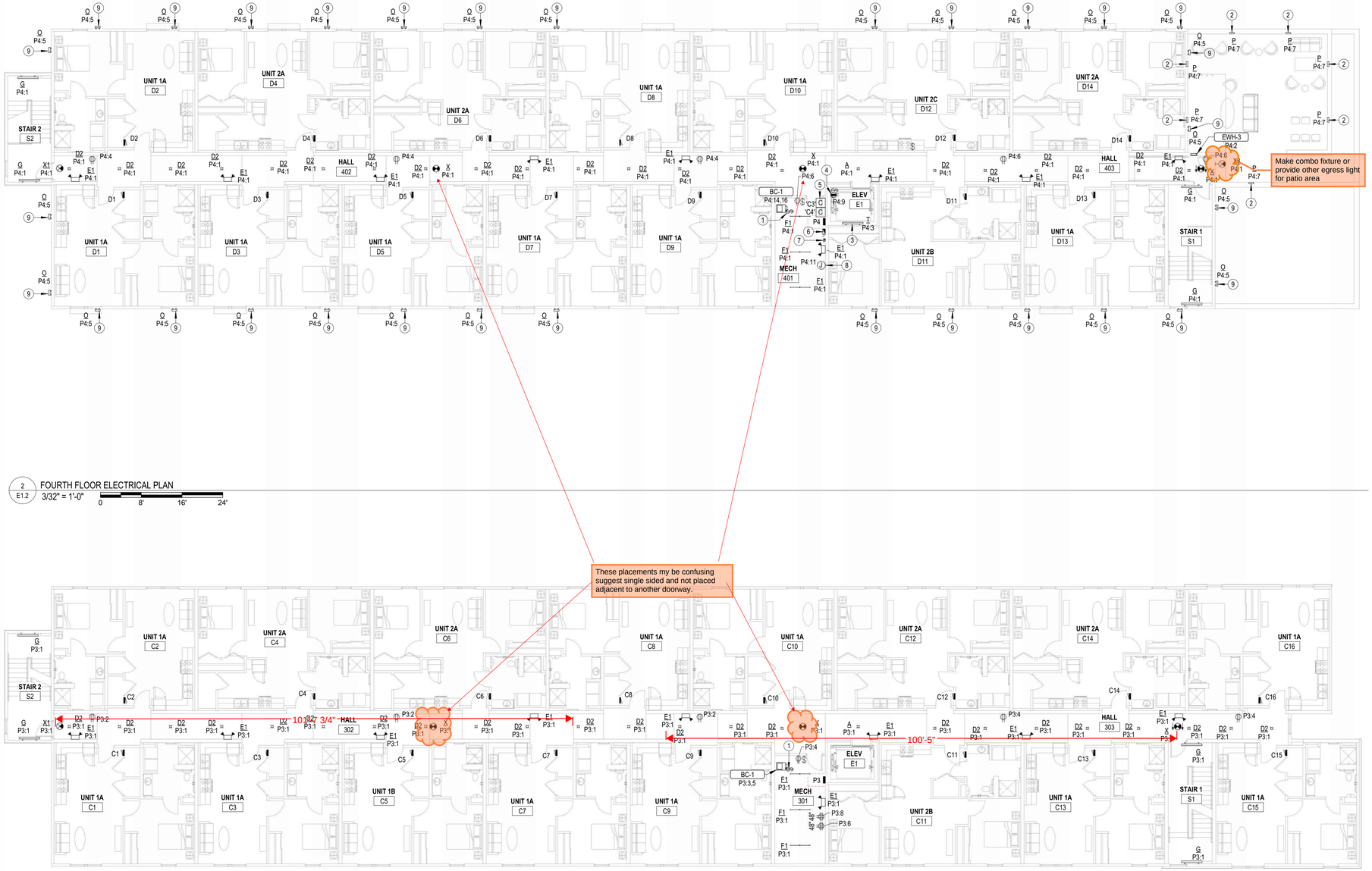

2 E1.2 FOURTH FLOOR ELECTRICAL PLAN
3/32" = 1'-0"
0 8' 16' 24'

1 E1.2 THIRD FLOOR ELECTRICAL PLAN
3/32" = 1'-0"
0 8'-1 3/4" 16' 24'

NOTES BY SYMBOL

1. PROVIDE 30A/2P, SINGLE THROW, MANUAL MOTOR CONTROLLER SNAP SWITCH IN NEMA 1 ENCLOSURE. HUBBELL #HBL7832D OR EQUAL. MAKE FINAL FLEXIBLE CONNECTION TO BLOWER COIL/ELECTRIC HEAT.
2. INSTALL FIXTURE APPROXIMATELY 24" ABOVE ROOFTOP DECKING SYSTEM. COORDINATE EXACT LOCATION WITH PARAPET FRAMING.
3. INSTALL LIGHT FIXTURE, SWITCH, AND RECEPTACLE AT TOP OF HOISTWAY. VERIFY EXACT MOUNTING LOCATION AND REQUIREMENTS WITH ELEVATOR INSTALLER.
4. INSTALL RECEPTACLE ON WALL OF ELEVATOR HOISTWAY. VERIFY EXACT LOCATION WITH ELEVATOR EQUIPMENT INSTALLER.
5. TIMECLOCK AND CONTACTORS FOR EXTERIOR LIGHTING AND OFFICE RECEPTACLE CONTROL. RE: 2:E6.1.
6. ELEVATOR POWER MODULE SWITCH: 60A/208V/3P SWITCH COMPLETE WITH 60A DUAL ELEMENT, TIME DELAY CLASS 'J' FUSES, 120V CONTROL TRANSFORMER, FIRE ALARM SAFETY INTERFACE RELAY, KEY TEST SWITCH, GREEN PILOT LIGHT, AUXILIARY CONTACTS FOR ELEVATOR RECALL, AND FIRE ALARM VOLTAGE MONITORING RELAY. EATON BUSSMAN #PS-6-T20-R1-K-G-B-F1 OR EQUAL. COORDINATE EXACT MOUNTING LOCATION AND REQUIREMENTS WITH ELEVATOR EQUIPMENT INSTALLER, AND PROVIDE FINAL ELECTRICAL CONNECTION TO ELEVATOR CONTROLLER. SEE DETAIL 1:E6.1.
7. 30A DISCONNECT SWITCH, LOCKABLE IN "OFF" POSITION, WITH SOLID NEUTRAL AND (1) 20A DUAL-ELEMENT, TIME DELAY FUSE IN NEMA 1 ENCLOSURE FOR ELEVATOR CAB LIGHTS & EXHAUST. MOUNT AT 6'-0" AFF TO TOP AND LABEL WITH CORRESPONDING ELEVATOR CAR NUMBER AND CIRCUIT NUMBER. COORDINATE EXACT MOUNTING LOCATION AND REQUIREMENTS WITH ELEVATOR EQUIPMENT INSTALLER. PROVIDE FINAL ELECTRICAL CONNECTION TO ELEVATOR CONTROLLER.
8. PROVIDE POWER FOR ELEVATOR SHUNT TRIP CONTROL. SEE 1:E6.1 FOR MORE INFORMATION.
9. ROUTE CIRCUIT THROUGH CONTACTOR INDICATED ON DETAIL 2:E6.1.

LST Consulting Engineers, PA
Manhattan, Kansas
785.587.8042

Wichita, Kansas
316.285.0696

www.LSTengineers.com
mail@LSTengineers.com
Project 24061

JonesGillamRenz
730 N. Ninth
Salina, KS 67401
785.827.0386
1881 Main Street, Suite 301
Kansas City, MO 64108
jgr@jgrarchitects.com

THE RESIDENCE AT HERATIGE WEST

NEW SENIOR LIVING FACILITY

ANDOVER, KANSAS

RYAN PATRICK LIEB LICENSED 24155 KANSAS PROFESSIONAL ENGINEER
2025.01.10 16:39:12-06'00'

REVISIONS:

DATE: 01-10-2025
JOB: 24-3379
SHEET NO.:

E1.2

COPYRIGHTED ©

Wichita-Sedgwick County
Metropolitan Area Building
and Construction Department

REVIEWED FOR CODE COMPLIANCE

CORRECTIONS OR COMMENTS MADE ON THESE DRAWINGS AND THIS DOCUMENT DURING THIS REVIEW DO NOT RELIEVE CONTRACTOR FROM COMPLIANCE WITH ALL REQUIREMENTS OF THE CODE OF THE MABCD, THE CITY OF WICHITA OR SEDGWICK COUNTY. THIS REVIEW IS ONLY FOR GENERAL CONFORMANCE OF THE CODE. THE CONTRACTOR IS RESPONSIBLE FOR CONFORMING AND CORRELATING ALL TECHNIQUES OF CONSTRUCTION. THIS APPROVAL IS SUBJECT TO PROVISIONS OF SECTION 107.4 OF THE 2012 INTERNATIONAL BUILDING CODE.

DATE: 02/19/25 BY: William Jerauld Jr

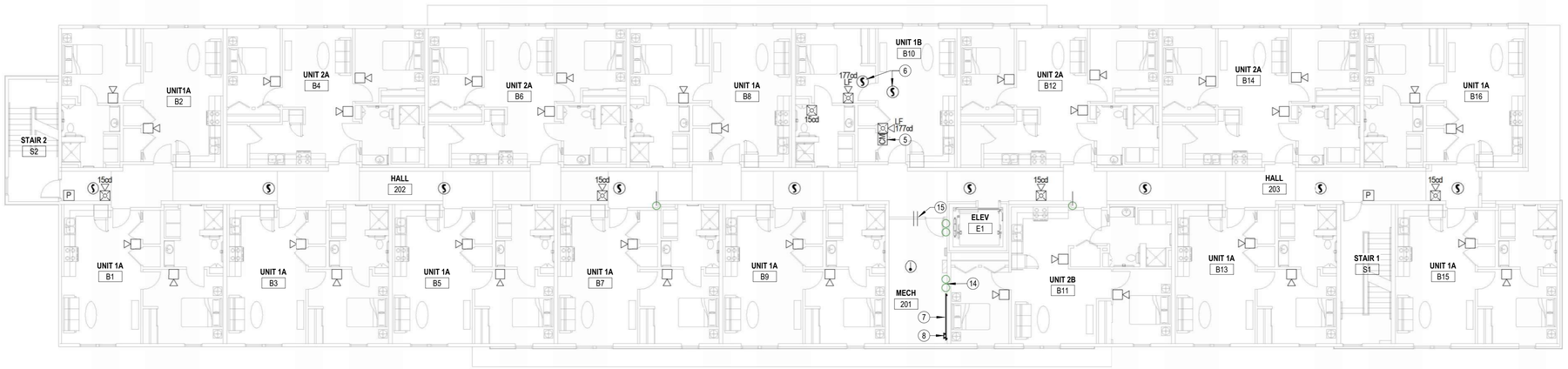

2 / E1.3 SECOND FLOOR SPECIAL SYSTEMS PLAN
3/32" = 1'-0"
0 8' 16' 24'

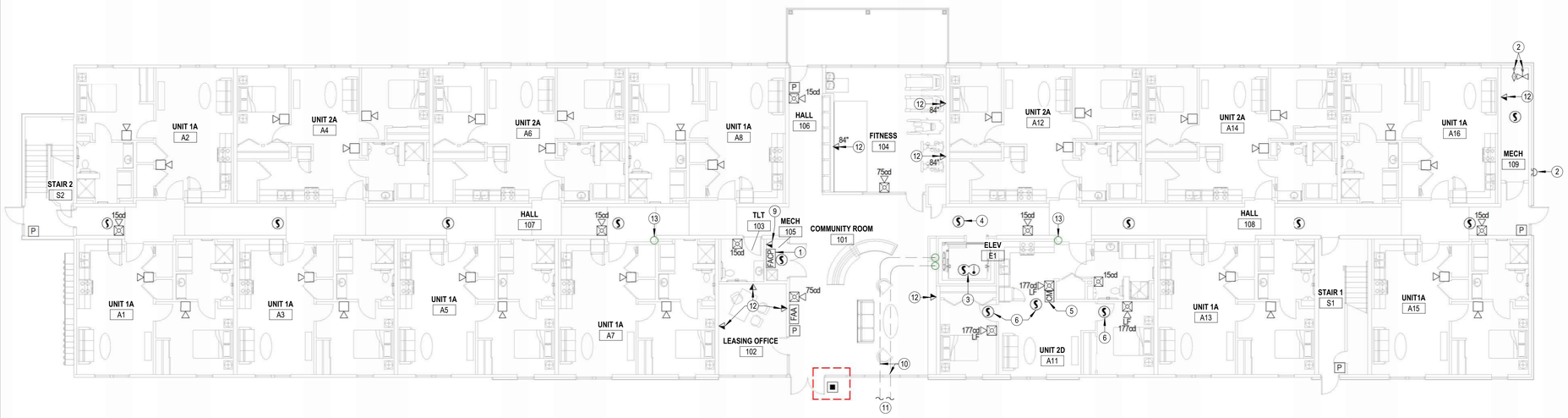

COMMUNICATIONS HOMERUNS FROM APARTMENTS SHALL BE ROUTED TO TELEPHONE TERMINA BOARD IN 'MECH 201'

1 / E1.3 FIRST FLOOR SPECIAL SYSTEMS PLAN
3/32" = 1'-0"
0 8' 16' 24'

NOTES BY SYMBOL

1. PROVIDE (2) CAT 5e UTP, NEC TYPE 'CMP' CABLES (SUPERIOR ESSEX #51-241-48 OR EQUAL) IN 3/4" CONDUIT FROM FACP TO MAIN TELECOM TERMINAL BOARD FOR CONNECTION TO FA SYSTEM DACT FOR REMOTE MONITORING.
2. PROVIDE ADDRESSABLE FIRE ALARM RELAYS AND MONITORING MODULES FOR ALL FIRE SPRINKLER FLOW SWITCHES, TAMPER SWITCHES AND BELL/GONG. COORDINATE QUANTITIES AND LOCATIONS WITH FIRE SPRINKLER CONTRACTOR.
3. SMOKE DETECTOR AND HEAT DETECTOR AT TOP OF ELEVATOR HOISTWAY FOR RECALL AND SHUT-DOWN. SEE DETAIL 1, SHEET E6.1.
4. ELEVATOR LOBBY SMOKE DETECTOR FOR ELEVATOR RECALL. SEE DETAIL 1, SHEET E6.1.
5. FIRE ALARM ADDRESSABLE CONTROL MODULE FOR CONTROL OF APARTMENT UNIT'S NOTIFICATION APPLIANCE CIRCUIT. MODULE SHALL BE PROGRAMMED TO ACTIVATE APARTMENT UNIT'S NOTIFICATION APPLIANCES UPON GENERAL BUILDING FIRE ALARM AND UPON ACTIVATION OF ANY SMOKE DETECTOR OR CO DETECTOR WITHIN APARTMENT UNIT. MOUNT FLUSH IN WALL AT 8'-0" AFF.
6. FIRE ALARM SYSTEM SMOKE DETECTOR.
7. PROVIDE 8' LONG SHEET OF 3/4" ACX FIRE RETARDANT PLYWOOD INSTALLED VERTICALLY WITH BOTTOM AT 6" AFF. WIDTH AS REQUIRED. PLYWOOD SHALL BE PERMANENTLY FASTENED TO THE WALL BY MEANS OF WALL ANCHORS UTILIZING GALVANIZED, ZINC PLATED, OR STAINLESS STEEL HARDWARE WITH A FLAT HEAD. FINISHED INSTALLATION SHALL HAVE FLUSH APPEARANCE WITH COUNTERSUNK SCREW HEADS TO PREVENT SPLITTING OF THE PLYWOOD. DRYWALL SCREWS ARE NOT ACCEPTABLE. PAINT WITH TWO COATS OF LIGHT GRAY FIRE RETARDANT SEALER PRIOR TO INSTALLATION OF ANY EQUIPMENT.
8. TELECOMMUNICATIONS GROUND BAR SHALL BE 13-1/4"W x 2"H x 1/4" THICK ELECTRO-TIN PLATED COPPER BUS BAR, COMPLETE WITH INSULATED STAND-OFFS AND STAINLESS STEEL BRACKETS, ERICO #TGBA14L06PT OR EQUAL. MOUNT AT 18" AFF. ALL CONNECTIONS TO GROUND BAR SHALL BE MADE USING COMPRESSION TYPE LUGS.
9. PROVIDE 1" CONDUIT WITH PULL STRING FROM TELECOM OUTLET TO MAIN TELEPHONE TERMINAL BOARD IN MECH 108.
10. PROVIDE (2) 3" CONDUITS FOR COMMUNICATIONS SERVICES. PROVIDE PULL STRING IN EACH RACEWAY.
11. SEE SITE PLAN FOR CONTINUATION.
12. COORDINATE FINAL LOCATIONS OF ALL CATV AND PHONE OUTLETS WITH OWNER.
13. 4" CONDUIT DOWN FROM SECOND FLOOR. WHERE CONDUIT PENETRATES FIRE RATED ASSEMBLY, PROVIDE WITH FIRESTOPPING FITTINGS (WIREMOLD #FS4R-RED) AT BOTH ENDS. TERMINATE CONDUIT ABOVE ACCESSIBLE CEILING.
14. 4" EMT CONDUIT SLEEVES THROUGH 2ND AND 3RD FLOOR FOR COMMUNICATIONS CABLING. PROVIDE WITH FIRESTOPPING FITTINGS (WIREMOLD #FS4R-RED) AT BOTH ENDS.
15. EMT CONDUIT SLEEVE(S) THROUGH WALL WITH NYLON BUSHINGS FOR COMMUNICATIONS CABLING. QUANTITY AND SIZE AS REQUIRED. INSTALL ABOVE ACCESSIBLE CEILING. WHERE CONDUITS PENETRATE FIRE WALL, PROVIDE WITH FIRESTOPPING FITTINGS (WIREMOLD #FS4R-RED) AT BOTH ENDS.

LST Consulting Engineers, PA
Manhattan, Kansas
785.587.8042

Wichita, Kansas
316.285.0696

www.LSTengineers.com
mail@LSTengineers.com
Project 24061

JonesGillamRenz
730 N. Ninth 1881 Main Street, Suite 301
Salina, KS 67401 Kansas City, MO 64108
785.827.0386 jgr@jgrarchitects.com

THE RESIDENCE AT HERATIGE WEST

NEW SENIOR LIVING FACILITY

ANDOVER, KANSAS

BRYAN PATRICK LYNN LICENSED 24155 PROFESSIONAL ENGINEER KANSAS
2025.01.10 16:39:30-06'00'

REVISIONS:

DATE: 01-10-2025
JOB: 24-3379
SHEET NO.:

E1.3

COPYRIGHTED ©

Wichita-Sedgwick County
Metropolitan Area Building
and Construction Department

REVIEWED FOR CODE COMPLIANCE

CORRECTIONS OR COMMENTS MADE ON THESE DRAWINGS AND THIS DOCUMENT DURING THIS REVIEW DO NOT RELIEVE CONTRACTOR FROM COMPLIANCE WITH ALL REQUIREMENTS OF THE CODE OF THE MABCD, THE CITY OF WICHITA OR SEDGWICK COUNTY. THIS REVIEW IS ONLY FOR GENERAL CONFORMANCE OF THE CODE. THE CONTRACTOR IS RESPONSIBLE FOR CONFORMING AND CORRELATING ALL TECHNIQUES OF CONSTRUCTION. THIS APPROVAL IS SUBJECT TO PROVISIONS OF SECTION 107.4 OF THE 2012 INTERNATIONAL BUILDING CODE.

DATE: 02/19/25 BY: William Jerauld Jr

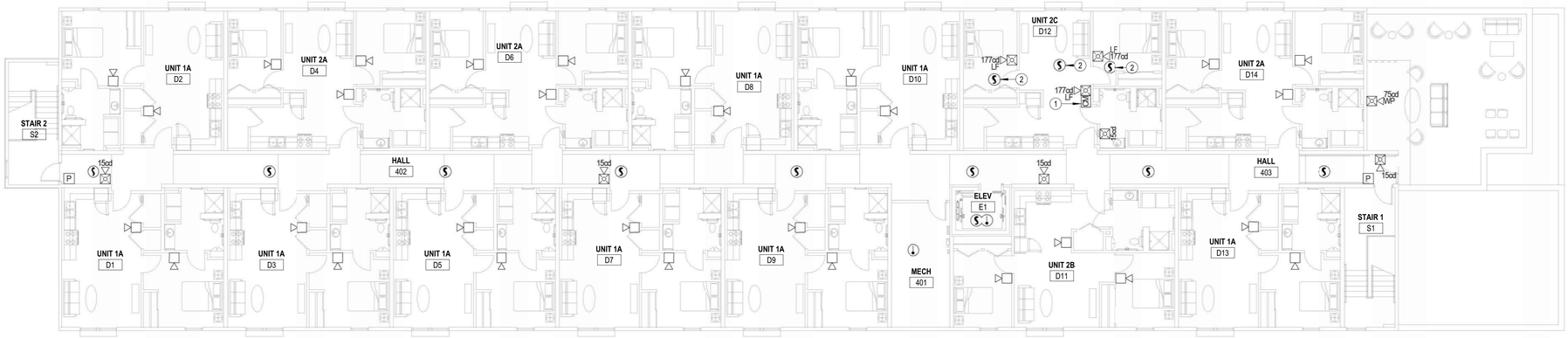

COMMUNICATIONS HOMERUNS FROM APARTMENTS SHALL BE ROUTED TO TELEPHONE TERMINA BOARD IN 'MECH 301'

NOTES BY SYMBOL

1. FIRE ALARM ADDRESSABLE CONTROL MODULE FOR CONTROL OF APARTMENT UNIT'S NOTIFICATION APPLIANCE CIRCUIT. MODULE SHALL BE PROGRAMMED TO ACTIVATE APARTMENT UNIT'S NOTIFICATION APPLIANCES UPON GENERAL BUILDING FIRE ALARM AND UPON ACTIVATION OF ANY SMOKE DETECTOR OR CO DETECTOR WITHIN APARTMENT UNIT. MOUNT FLUSH IN WALL AT 8'-0" AFF.
2. FIRE ALARM SYSTEM SMOKE DETECTOR.
3. TELECOMMUNICATIONS GROUND BAR SHALL BE 13-1/4"W x 2"H x 1/4" THICK ELECTRO-TIN PLATED COPPER BUS BAR. COMPLETE WITH INSULATED STAND-OFFS AND STAINLESS STEEL BRACKETS, ERICO #TGBA14L06PT OR EQUAL. MOUNT AT 18" AFF. ALL CONNECTIONS TO GROUND BAR SHALL BE MADE USING COMPRESSION TYPE LUGS.
4. PROVIDE 8' LONG SHEET OF 3/4" ACX FIRE RETARDANT PLYWOOD INSTALLED VERTICALLY WITH BOTTOM AT 6" AFF. WIDTH AS REQUIRED. PLYWOOD SHALL BE PERMANENTLY FASTENED TO THE WALL BY MEANS OF WALL ANCHORS UTILIZING GALVANIZED, ZINC PLATED, OR STAINLESS STEEL HARDWARE WITH A FLAT HEAD. FINISHED INSTALLATION SHALL HAVE FLUSH APPEARANCE WITH COUNTERSUNK SCREW HEADS TO PREVENT SPLITTING OF THE PLYWOOD. DRYWALL SCREWS ARE NOT ACCEPTABLE. PAINT WITH TWO COATS OF LIGHT GRAY FIRE RETARDANT SEALER PRIOR TO INSTALLATION OF ANY EQUIPMENT.
5. EMT CONDUIT SLEEVE(S) THROUGH WALL WITH NYLON BUSHINGS FOR COMMUNICATIONS CABLING. QUANTITY AND SIZE AS REQUIRED. INSTALL ABOVE ACCESSIBLE CEILING. WHERE CONDUITS PENETRATE FIRE WALL, PROVIDE WITH FIRESTOPPING FITTINGS (WIREMOLD #FS4R-RED) AT BOTH ENDS.
6. 4" EMT CONDUIT SLEEVES THROUGH 2ND AND 3RD FLOOR FOR COMMUNICATIONS CABLING. PROVIDE WITH FIRESTOPPING FITTINGS (WIREMOLD #FS4R-RED) AT BOTH ENDS.

2 E1.4 FOURTH FLOOR SPECAIL SYSTEMS PLAN
3/32" = 1'-0"

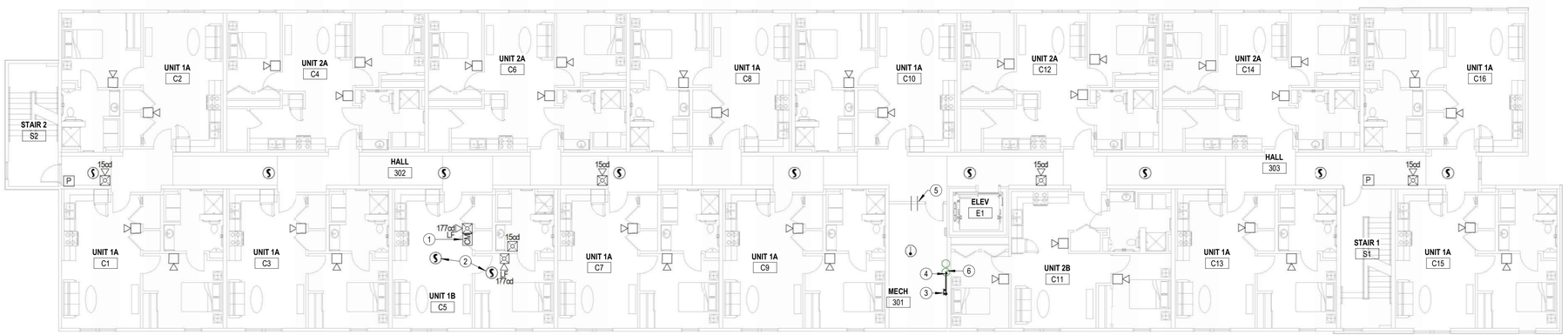

1 E1.4 THIRD FLOOR SPECIAL SYSTEMS PLAN
3/32" = 1'-0"

LST Consulting Engineers, PA
Manhattan, Kansas
785.587.8042

Wichita, Kansas
316.285.0696

www.LSTengineers.com
mail@LSTengineers.com
Project 24061

JonesGillamRenz
730 N. Ninth 1881 Main Street, Suite 301
Salina, KS 67401 Kansas City, MO 64108
785.827.0386 jgr@jgrarchitects.com

THE RESIDENCE AT HERATIGE WEST
NEW SENIOR LIVING FACILITY
ANDOVER, KANSAS



REVISIONS:

DATE: 01-10-2025
JOB: 24-3379
SHEET NO.:

E1.4

COPYRIGHTED ©

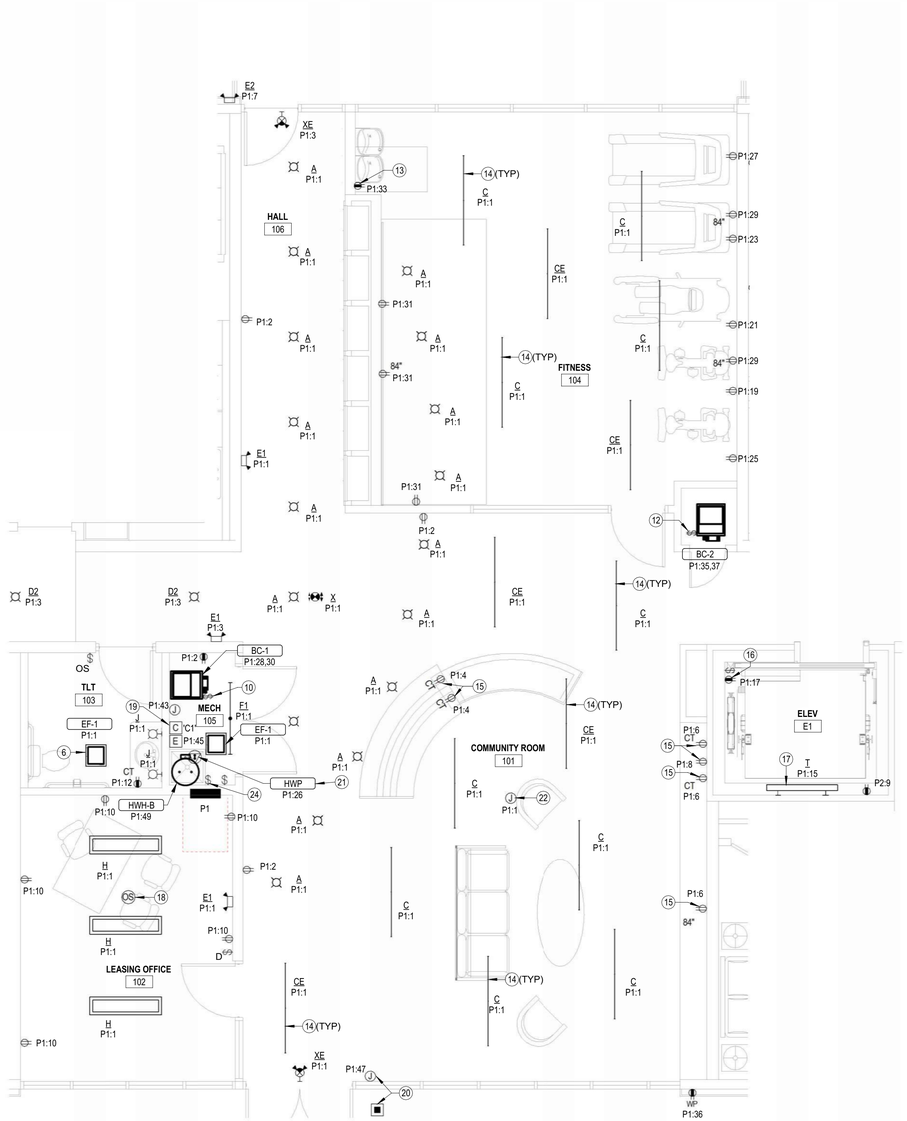

5 COMMON SPACE ENLARGED ELECTRICAL PLAN
E4.1 1/4" = 1'-0"
0 2' 4' 8'

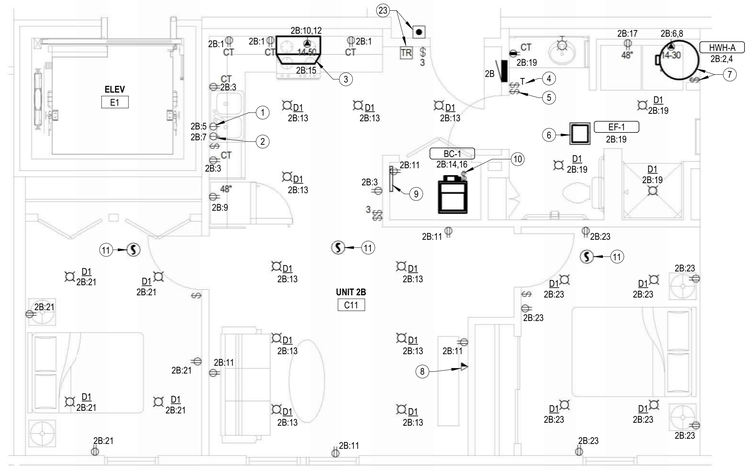

4 2 BEDROOM (UNIT 2B) ENLARGED ELECTRICAL PLAN
E4.1 1/4" = 1'-0"
0 2' 4' 8'

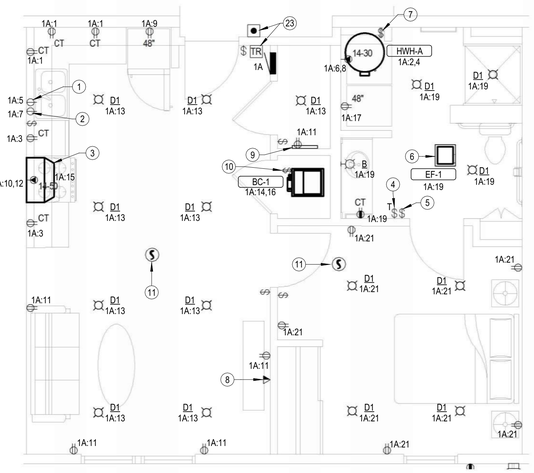

2 1 BEDROOM (UNIT 1A) ENLARGED ELECTRICAL PLAN
E4.1 1/4" = 1'-0"
0 2' 4' 8'

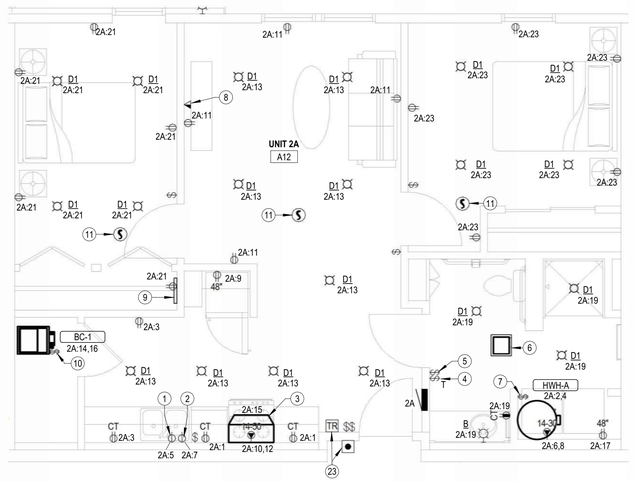

3 2 BEDROOM (UNIT 2A) ENLARGED ELECTRICAL PLAN
E4.1 1/4" = 1'-0"
0 2' 4' 8'

Wichita-Sedgwick County
Metropolitan Area Building
and Construction Department

REVIEWED FOR CODE COMPLIANCE

CORRECTIONS OR COMMENTS MADE ON THESE DRAWINGS AND THIS DOCUMENT DURING THIS REVIEW DO NOT RELIEVE CONTRACTOR FROM COMPLIANCE WITH ALL REQUIREMENTS OF THE CODE OF THE MABCD, THE CITY OF WICHITA OR SEDGWICK COUNTY. THIS REVIEW IS ONLY FOR GENERAL CONFORMANCE OF THE CODE. THE CONTRACTOR IS RESPONSIBLE FOR CONFORMING AND CORRELATING ALL TECHNIQUES OF CONSTRUCTION. THIS APPROVAL IS SUBJECT TO PROVISIONS OF SECTION 107.4 OF THE 2012 INTERNATIONAL BUILDING CODE.

DATE: 02/19/25 BY: William Jerauld Jr

NOTES BY SYMBOL

1 SWITCHED RECEPTACLE BELOW COUNTER FOR GARBAGE DISPOSAL. COORDINATE EXACT LOCATION OF SWITCH WITH ARCHITECT.
2 PROVIDE RECEPTACLE BELOW COUNTER FOR CORD AND PLUG CONNECTION OF DISHWASHER. PROVIDE CORD AND GROUNDING PLUG AS REQUIRED.
3 PROVIDE 120V CONNECTION TO RANGE HOOD/MICROWAVE. STANDARD AND ADAPTABLE UNITS WILL HAVE MICROWAVE ABOVE RANGE. ACCESSIBLE UNITS WILL HAVE RANGE HOOD. COORDINATE EXACT ELECTRICAL ROUGH-IN REQUIREMENTS WITH EQUIPMENT PROVIDED. IF EQUIPMENT IS CORD AND PLUG, PROVIDE RECEPTACLE INSIDE CABINET ABOVE RANGE.
4 PROVIDE TIMER SWITCH EQUAL TO AIR CYCLER 'SMART EXHAUST' FOR CONTROL OF EXHAUST FAN. SET SWITCH PER MANUFACTURER'S INSTRUCTIONS TO OPERATE FAN AS INDICATED BELOW:
1 BEDROOM: 36 MINUTES PER HOUR
2 BEDROOM: 54 MINUTES PER HOUR
NOTE: CONTRACTOR MAY OMIT TIMER SWITCH IN 2 BEDROOM UNITS AND WIRE EXHAUST FAN FOR CONTINUOUS OPERATION.
5 SWITCH CLOSEST TO DOOR SHALL CONTROL ALL LIGHTS IN BATHROOM, AND THE OTHER SWITCH SHALL CONTROL THE EXHAUST FAN.
6 CONNECT EXHAUST FAN/LIGHT PROVIDED BY MECHANICAL CONTRACTOR.
7 PROVIDE 30A/2P SNAP SWITCH AND CONNECT WATER HEATER. INSTALL SWITCH ADJACENT TO WATER HEATER.
8 COORDINATE FINAL LOCATIONS OF ALL CATV AND PHONE OUTLETS WITH OWNER.
9 TELECOM DISTRIBUTION DEVICE APPROXIMATELY 4'-0" AFF. COORDINATE EXACT REQUIREMENTS WITH UTILITY PROVIDER SELECTED BY OWNER.
10 PROVIDE 30A/2P, SINGLE THROW, MANUAL MOTOR CONTROLLER SNAP SWITCH IN NEMA 1 ENCLOSURE. HUBBELL #HBL7832D OR EQUAL. MAKE FINAL FLEXIBLE CONNECTION TO BLOWER COIL/ELECTRIC HEAT.
11 CEILING MOUNTED SMOKE ALARM IN APARTMENTS TO BE 120VAC WITH 9V BATTERY BACKUP, INTERCONNECTED TO OTHERS IN SAME APARTMENT. DEVICE SHALL HAVE CARBON MONOXIDE DETECTOR AND PHOTELECTRIC TYPE SMOKE DETECTOR WITH SOUNDER HORN HAVING AN 85 dB OUTPUT AT 10', SHALL HAVE A SINGLE BUTTON FOR TEST/SILENCE AND LED INDICATOR LIGHTS, AND SHALL BE UL 217 LISTED, BRK #SC7010B OR EQUAL.
12 PROVIDE 40A/2P, SINGLE THROW, MANUAL MOTOR CONTROLLER SNAP SWITCH IN NEMA 1 ENCLOSURE. HUBBELL #HBL7842D OR EQUAL. MAKE FINAL FLEXIBLE CONNECTION TO BLOWER COIL/ELECTRIC HEAT.
13 COORDINATE EXACT MOUNTING LOCATION OF DRINKING FOUNTAIN RECEPTACLE WITH PLUMBING CONTRACTOR.
14 INSTALL LIGHT FIXTURES IN ARCHITECTURAL DROP CEILING. COORDINATE REQUIREMENTS WITH G.C. AND ARCHITECT.
15 COORDINATE ELECTRICAL ROUGH-IN LOCATIONS WITH FINAL CASEWORK DESIGN.
16 INSTALL RECEPTACLE ON WALL OF ELEVATOR PIT. VERIFY EXACT LOCATION WITH ELEVATOR EQUIPMENT INSTALLER.
17 INSTALL LUMINAIRE ON WALL OF ELEVATOR PIT. VERIFY EXACT LOCATION WITH ELEVATOR EQUIPMENT INSTALLER. INSTALL LIGHT SWITCH ADJACENT TO PIT LADDER AT 48" ABOVE FLOOR LANDING.
18 PROVIDE LINE VOLTAGE OCCUPANCY SENSOR FOR CONTROL OF ROOM LIGHTS.
19 TIMECLOCK AND CONTACTORS FOR EXTERIOR LIGHTING AND OFFICE RECEPTACLE CONTROL, RE: 2:E6.1.
20 PROVIDE PUSH BUTTON ROUGH-IN AND PREP DOOR JAM WITH RACEWAY AS INDICATED IN DETAIL 3:M6.1 FOR AUTOMATIC DOOR OPENER. COORDINATE EXACT REQUIREMENTS WITH OWNER.
21 ROUTE 120V CIRCUIT FOR HOT WATER RECIRCULATION PUMP THROUGH ADJACENT AQUASTAT. PROVIDE 20A/1P SNAP SWITCH ADJACENT TO PUMP AND MAKE FINAL FLEXIBLE CONNECTION. COORDINATE WITH PLUMBING CONTRACTOR.
22 ROUGH-IN FOR DECORATIVE LIGHT FIXTURE. FIXTURE TO BE SELECTED BY INTERIOR DESIGNER, PROVIDED BY E.C.
23 INSTALL DOORBELL SYSTEM AS SELECTED BY INTERIOR DESIGNER. CIRCUIT TRANSFORMER TO NEAREST UNSWITCHED LIGHTING CIRCUIT. PROVIDE ALL COMPONENTS REQUIRED FOR COMPLETE INSTALLATION. COORDINATE EXACT REQUIREMENTS WITH ARCHITECT AND G.C.
24 PROVIDE 30A/1P SNAP SWITCH AND CONNECT WATER HEATER. INSTALL SWITCH ADJACENT TO WATER HEATER.

LST Consulting Engineers, PA
Manhattan, Kansas
785.587.8042
Wichita, Kansas
316.285.0696
www.LSTengineers.com
mail@LSTengineers.com
Project 24061

JonesGillamRenz
730 N. Ninth
Salina, KS 67401
1881 Main Street, Suite 301
Kansas City, MO 64108
jgr@jgrarchitects.com
785.827.0386

THE RESIDENCE AT HERATIGE WEST
NEW SENIOR LIVING FACILITY
ANDOVER, KANSAS

KEVIN PATRICK LYNCH LICENSED 24155 KANSAS PROFESSIONAL ENGINEER
2025.01.10 16:40:08-06'00'

REVISIONS:

DATE: 01-10-2025
JOB: 24-3379
SHEET NO.:

E4.1

COPYRIGHTED ©

Designation: 1A

Installed Location: 1 Bedroom Unit (1A)
Voltage: 120/208 1PH 3W-1Ph-3W
Mounting: Flush
Enclosure: NEMA 1

Bus Amps: 100
MCB Amps: MLO
Features & Modifications: PROVIDE SURGE PROTECTION DEVICE

SCCR/AIC: 22.0 kA
Mains FN/Note: -

Ckt	Description	Circuitry	Trip (A)	FN	A		B		FN	Trip (A)	Circuitry	Description	Ckt
1A:1	Counter Top Receptacles	1/2"C,1#12,#12N,#12G	20	GA	4.5 A	21....				30	1/2"C,2#10,#10G	Electric Water Heating	1A:2
1A:3	Counter Top Receptacle	1/2"C,1#12,#12N,#12G	20	GA			3.0 A	21....					1A:4
1A:5	Disposal	1/2"C,1#12,#12N,#12G	20	GA	4.2 A	40....			G	60	3/4"C,2#4,#10G	Clothes Dryer	1A:6
1A:7	Dishwasher	1/2"C,1#12,#12N,#12G	20	GA			4.2 A	40....					1A:8
1A:9	Refrigerator	1/2"C,1#12,#12N,#12G	20	GA	1.5 A	40....			G	60	3/4"C,2#4,#10G	Range	1A:10
1A:11	Living Room Receptacles	1/2"C,1#12,#12N,#12G	20	A			7.5 A	40....					1A:12
1A:13	Kitchen/Living Room Lights	1/2"C,1#12,#12N,#12G	20	A	0.8 A	20....				30	1/2"C,2#10,#10G	Blower Coil	1A:14
1A:15	Hood/Microwave	1/2"C,1#12,#12N,#12G	20	GA			2.1 A	20....					1A:16
1A:17	Clothes Washer Receptacle	1/2"C,1#12,#12N,#12G	20	A	1.5 A	11....				20	1/2"C,2#12,#12G	Heat Pump	1A:18
1A:19	Bathroom	1/2"C,1#12,#12N,#12G	20				2.8 A	11....					1A:20
1A:21	Bedroom 1	1/2"C,1#12,#12N,#12G	20	A	7.9 A	--				--	--	Surge Protection	1A:22
1A:23	Space	--	--				--	--		--	--	Surge Protection	1A:24

Designation: 1B

Installed Location: 1 Bedroom Unit (1B)
Voltage: 120/208 1PH 3W-1Ph-3W
Mounting: Flush
Enclosure: NEMA 1

Bus Amps: 100
MCB Amps: MLO
Features & Modifications: PROVIDE SURGE PROTECTION DEVICE

SCCR/AIC: 22.0 kA
Mains FN/Note: -

Ckt	Description	Circuitry	Trip (A)	FN	A		B		FN	Trip (A)	Circuitry	Description	Ckt
1B:1	Counter Top Receptacles	1/2"C,1#12,#12N,#12G	20	GA	4.5 A	21....				30	1/2"C,2#10,#10G	Electric Water Heating	1B:2
1B:3	Counter Top Receptacles	1/2"C,1#12,#12N,#12G	20	GA			3.0 A	21....					1B:4
1B:5	Disposal	1/2"C,1#12,#12N,#12G	20	GA	4.2 A	40....			G	60	3/4"C,2#4,#10G	Clothes Dryer	1B:6
1B:7	Dishwasher	1/2"C,1#12,#12N,#12G	20	GA			4.2 A	40....					1B:8
1B:9	Refrigerator	1/2"C,1#12,#12N,#12G	20	GA	1.5 A	40....			G	60	3/4"C,2#4,#10G	Range	1B:10
1B:11	Living Room Receptacles	1/2"C,1#12,#12N,#12G	20	A			7.5 A	40....					1B:12
1B:13	Kitchen/Living Room Lights	1/2"C,1#12,#12N,#12G	20	A	0.8 A	20....				30	1/2"C,2#10,#10G	Blower Coil	1B:14
1B:15	Hood/Microwave	1/2"C,1#12,#12N,#12G	20	GA			2.1 A	20....					1B:16
1B:17	Clothes Washer Receptacle	1/2"C,1#12,#12N,#12G	20	A	1.5 A	11....				20	1/2"C,2#12,#12G	Heat Pump	1B:18
1B:19	Bathroom	1/2"C,1#12,#12N,#12G	20				2.8 A	11....					1B:20
1B:21	Bedroom	1/2"C,1#12,#12N,#12G	20	A	7.9 A	--				--	--	Surge Protection	1B:22
1B:23	Space	--	--				--	--		--	--	Surge Protection	1B:24

Designation: 2A

Installed Location: 2 Bedroom Unit (2A)
Voltage: 120/208 1PH 3W-1Ph-3W
Mounting: Flush
Enclosure: NEMA 1

Bus Amps: 100
MCB Amps: MLO
Features & Modifications: PROVIDE SURGE PROTECTION DEVICE

SCCR/AIC: 22.0 kA
Mains FN/Note: -

Ckt	Description	Circuitry	Trip (A)	FN	A		B		FN	Trip (A)	Circuitry	Description	Ckt
2A:1	Counter Top Receptacles	1/2"C,1#12,#12N,#12G	20	GA	3.0 A	21....				30	1/2"C,2#10,#10G	Electric Water Heating	2A:2
2A:3	Counter Top/Kitchen Receptacles	1/2"C,1#12,#12N,#12G	20	GA			3.0 A	21....					2A:4
2A:5	Disposal	1/2"C,1#12,#12N,#12G	20	GA	4.2 A	40....			G	60	3/4"C,2#4,#10G	Clothes Dryer	2A:6
2A:7	Dishwasher	1/2"C,1#12,#12N,#12G	20	GA			4.2 A	40....					2A:8
2A:9	Refrigerator	1/2"C,1#12,#12N,#12G	20	GA	1.5 A	40....			G	60	3/4"C,2#4,#10G	Range	2A:10
2A:11	Living Room Receptacles	1/2"C,1#12,#12N,#12G	20	A			6.0 A	40....					2A:12
2A:13	Kitchen/Living Room Lights	1/2"C,1#12,#12N,#12G	20	A	0.8 A	20....				30	1/2"C,2#10,#10G	Blower Coil	2A:14
2A:15	Hood/Microwave	1/2"C,1#12,#12N,#12G	20	GA			2.1 A	20....					2A:16
2A:17	Clothes Washer Receptacle	1/2"C,1#12,#12N,#12G	20	A	1.5 A	11....				20	1/2"C,2#12,#12G	Heat Pump	2A:18
2A:19	Bathroom	1/2"C,1#12,#12N,#12G	20				2.8 A	11....					2A:20
2A:21	Bedroom 1	1/2"C,1#12,#12N,#12G	20	A	7.9 A	--				--	--	Surge Protection	2A:22
2A:23	Bedroom 2	1/2"C,1#12,#12N,#12G	20	A			7.9 A	--		--	--	Surge Protection	2A:24

Designation: 2B

Installed Location: 2 Bedroom Unit (2B)
Voltage: 120/208 1PH 3W-1Ph-3W
Mounting: Flush
Enclosure: NEMA 1

Bus Amps: 100
MCB Amps: MLO
Features & Modifications: PROVIDE SURGE PROTECTION DEVICE

SCCR/AIC: 22.0 kA
Mains FN/Note: -

Ckt	Description	Circuitry	Trip (A)	FN	A		B		FN	Trip (A)	Circuitry	Description	Ckt
2B:1	Counter Top Receptacles	1/2"C,1#12,#12N,#12G	20	GA	4.5 A	21....				30	1/2"C,2#10,#10G	Electric Water Heating	2B:2
2B:3	Counter Top/Kitchen Receptacles	1/2"C,1#12,#12N,#12G	20	GA			4.5 A	21....					2B:4
2B:5	Disposal	1/2"C,1#12,#12N,#12G	20	GA	4.2 A	40....			G	60	3/4"C,2#4,#10G	Clothes Dryer	2B:6
2B:7	Dishwasher	1/2"C,1#12,#12N,#12G	20	GA			4.2 A	40....					2B:8
2B:9	Refrigerator	1/2"C,1#12,#12N,#12G	20	GA	1.5 A	40....			G	60	3/4"C,2#4,#10G	Range	2B:10
2B:11	Living Room Receptacles	1/2"C,1#12,#12N,#12G	20	A			7.5 A	40....					2B:12
2B:13	Kitchen/Living Room Lights	1/2"C,1#12,#12N,#12G	20	A	0.9 A	20....				30	1/2"C,2#10,#10G	Blower Coil	2B:14
2B:15	Hood/Microwave	1/2"C,1#12,#12N,#12G	20	GA			2.1 A	20....					2B:16
2B:17	Clothes Washer Receptacle	1/2"C,1#12,#12N,#12G	20	A	1.5 A	11....				20	1/2"C,2#12,#12G	Heat Pump	2B:18
2B:19	Bathroom	1/2"C,1#12,#12N,#12G	20				2.8 A	11....					2B:20
2B:21	Bedroom 1	1/2"C,1#12,#12N,#12G	20	A	4.9 A	--				--	--	Surge Protection	2B:22
2B:23	Bedroom 2	1/2"C,1#12,#12N,#12G	20	A			7.9 A	--		--	--	Surge Protection	2B:24

Designation: 2C

Installed Location: 2 Bedroom Unit (2C)
Voltage: 120/208 1PH 3W-1Ph-3W
Mounting: Flush
Enclosure: NEMA 1

Bus Amps: 100
MCB Amps: MLO
Features & Modifications: PROVIDE SURGE PROTECTION DEVICE

SCCR/AIC: 22.0 kA
Mains FN/Note: -

Ckt	Description	Circuitry	Trip (A)	FN	A		B		FN	Trip (A)	Circuitry	Description	Ckt
2C:1	Counter Top Receptacles	1/2"C,1#12,#12N,#12G	20	GA	3.0 A	21....				30	1/2"C,2#10,#10G	Electric Water Heating	2C:2
2C:3	Counter Top/Kitchen Receptacles	1/2"C,1#12,#12N,#12G	20	GA			3.0 A	21....					2C:4
2C:5	Disposal	1/2"C,1#12,#12N,#12G	20	GA	4.2 A	40....			G	60	3/4"C,2#4,#10G	Clothes Dryer	2C:6
2C:7	Dishwasher	1/2"C,1#12,#12N,#12G	20	GA			4.2 A	40....					2C:8
2C:9	Refrigerator	1/2"C,1#12,#12N,#12G	20	GA	1.5 A	40....			G	60	3/4"C,2#4,#10G	Range	2C:10
2C:11	Living Room Receptacles	1/2"C,1#12,#12N,#12G	20	A			6.0 A	40....					2C:12
2C:13	Kitchen/Living Room Lights	1/2"C,1#12,#12N,#12G	20	A	0.8 A	20....				30	1/2"C,2#10,#10G	Blower Coil	2C:14
2C:15	Hood/Microwave	1/2"C,1#12,#12N,#12G	20	GA			2.1 A	20....					2C:16
2C:17	Clothes Washer Receptacle	1/2"C,1#12,#12N,#12G	20	A	1.5 A	11....				20	1/2"C,2#12,#12G	Heat Pump	2C:18
2C:19	Bathroom	1/2"C,1#12,#12N,#12G	20				2.8 A	11....					2C:20
2C:21	Bedroom 1	1/2"C,1#12,#12N,#12G	20	A	7.9 A	--				--	--	Surge Protection	2C:22
2C:23	Bedroom 2	1/2"C,1#12,#12N,#12G	20	A			7.9 A	--		--	--	Surge Protection	2C:24

Designation: 2D

Installed Location: 2 Bedroom Unit (2D)
Voltage: 120/208 1PH 3W-1Ph-3W
Mounting: Flush
Enclosure: NEMA 1

Bus Amps: 100
MCB Amps: MLO
Features & Modifications: PROVIDE SURGE PROTECTION DEVICE

SCCR/AIC: 22.0 kA
Mains FN/Note: -

Ckt	Description	Circuitry	Trip (A)	FN	A		B		FN	Trip (A)	Circuitry	Description	Ckt
2D:1	Counter Top Receptacles	1/2"C,1#12,#12N,#12G	20	GA	4.5 A	21....				30	1/2"C,2#10,#10G	Electric Water Heating	2D:2
2D:3	Counter Top/Kitchen Receptacles	1/2"C,1#12,#12N,#12G	20	GA			4.5 A	21....					2D:4
2D:5	Disposal	1/2"C,1#12,#12N,#12G	20	GA	4.2 A	40....			G	60	3/4"C,2#4,#10G	Clothes Dryer	2D:6
2D:7	Dishwasher	1/2"C,1#12,#12N,#12G	20	GA			4.2 A	40....					2D:8
2D:9	Refrigerator	1/2"C,1#12,#12N,#12G	20	GA	1.5 A	40....			G	60	3/4"C,2#4,#10G	Range	2D:10
2D:11	Living Room Receptacles	1/2"C,1#12,#12N,#12G	20	A			7.5 A	40....					2D:12
2D:13	Kitchen/Living Room Lights	1/2"C,1#12,#12N,#12G	20	A	0.9 A	20....				30	1/2"C,2#10,#10G	Blower Coil	2D:14
2D:15	Hood/Microwave	1/2"C,1#12,#12N,#12G	20	GA			2.1 A	20....					2D:16
2D:17	Clothes Washer Receptacle	1/2"C,1#12,#12N,#12G	20	A	1.5 A	11....				20	1/2"C,2#12,#12G	Heat Pump	2D:18
2D:19	Bathroom	1/2"C,1#12,#12N,#12G	20				2.8 A	11....					2D:20
2D:21	Bedroom 1	1/2"C,1#12,#12N,#12G	20	A	4.9 A	--				--	--	Surge Protection	2D:22
2D:23	Bedroom 2	1/2"C,1#12,#12N,#12G	20	A			7.9 A	--		--	--	Surge Protection	2D:24

Breaker Function Schedule

A	Arc-Fault Interrupter (AFCI) Protection
AG	Combination Arc and Ground Fault Circuit Interrupter Protection
G	Ground-Fault Circuit Interrupter (GFCI) Protection (5 mA)
L	Provide breaker with lock-on clip

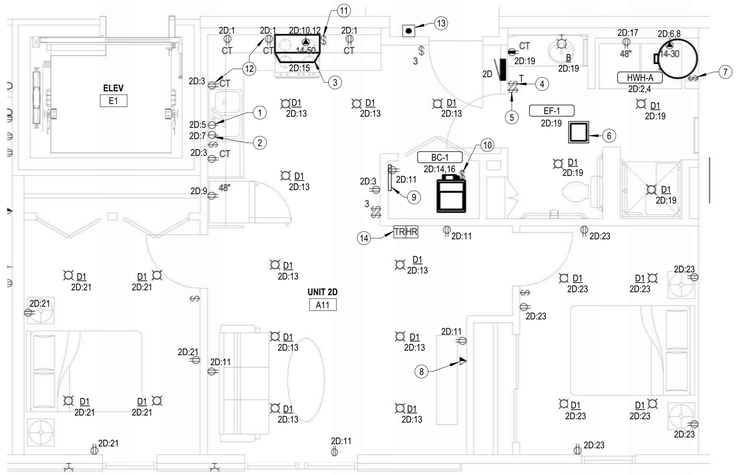

3 E4.2 2 BEDROOM (UNIT 2D) ACCESSIBLE ENLARGED ELECTRICAL PLAN
1/4" = 1'-0"
0 2' 4' 8'

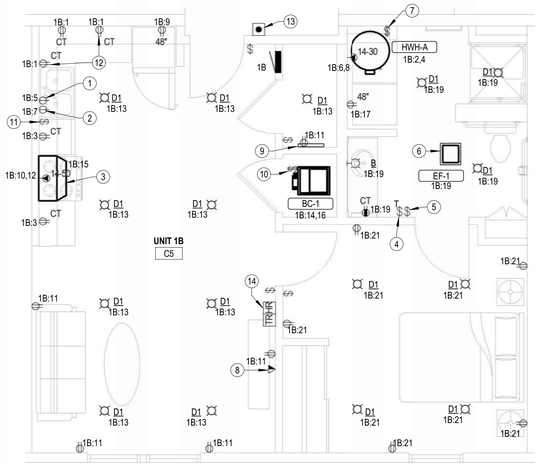

1 E4.2 1 BEDROOM ACCESSIBLE (UNIT 1B) ENLARGED ELECTRICAL PLAN
1/4" = 1'-0"
0 2' 4' 8'

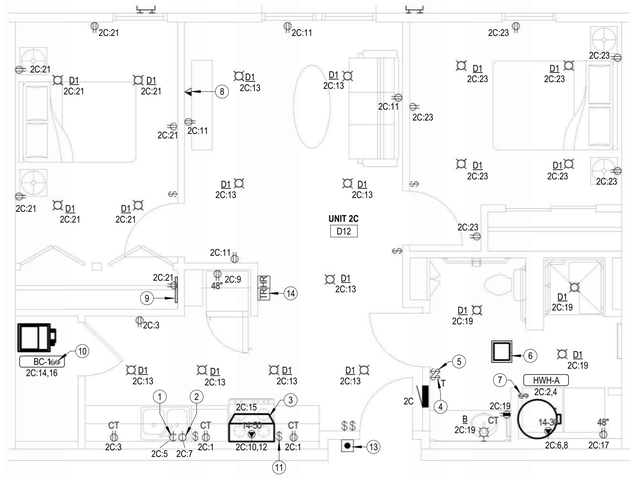

2 E4.2 2 BEDROOM ACCESSIBLE (UNIT 2C) ENLARGED ELECTRICAL PLAN
1/4" = 1'-0"
0 2' 4' 8'

NOTES BY SYMBOL

1. SWITCHED RECEPTACLE BELOW COUNTER FOR GARBAGE DISPOSAL. COORDINATE EXACT LOCATION OF SWITCH WITH ARCHITECT.
2. PROVIDE RECEPTACLE BELOW COUNTER FOR CORD AND PLUG CONNECTION OF DISHWASHER. PROVIDE CORD AND GROUNDING PLUG AS REQUIRED.
3. PROVIDE 120V CONNECTION TO RANGE HOOD/MICROWAVE. STANDARD AND ADAPTABLE UNITS WILL HAVE MICROWAVE ABOVE RANGE. ACCESSIBLE UNITS WILL HAVE RANGE HOOD. COORDINATE EXACT ELECTRICAL ROUGH-IN REQUIREMENTS WITH EQUIPMENT PROVIDED. IF EQUIPMENT IS CORD AND PLUG, PROVIDE RECEPTACLE INSIDE CABINET ABOVE RANGE.
4. PROVIDE TIMER SWITCH EQUAL TO AIR CYCLER 'SMART EXHAUST' FOR CONTROL OF EXHAUST FAN. SET SWITCH PER MANUFACTURER'S INSTRUCTIONS TO OPERATE FAN AS INDICATED BELOW:
   1 BEDROOM: 36 MINUTES PER HOUR
   2 BEDROOM: 54 MINUTES PER HOUR
   NOTE: CONTRACTOR MAY OMIT TIMER SWITCH IN 2 BEDROOM UNITS AND WIRE EXHAUST FAN FOR CONTINUOUS OPERATION.
5. SWITCH CLOSEST TO DOOR SHALL CONTROL ALL LIGHTS IN BATHROOM, AND THE OTHER SWITCH SHALL CONTROL THE EXHAUST FAN.
6. CONNECT EXHAUST FAN/LIGHT PROVIDED BY MECHANICAL CONTRACTOR.
7. PROVIDE 30A/2P SNAP SWITCH AND CONNECT WATER HEATER. INSTALL SWITCH ADJACENT TO WATER HEATER.
8. COORDINATE FINAL LOCATIONS OF ALL CATV AND PHONE OUTLETS WITH OWNER.
9. TELECOM DISTRIBUTION DEVICE APPROXIMATELY 4'-0" AFF. COORDINATE EXACT REQUIREMENTS WITH UTILITY PROVIDER SELECTED BY OWNER.
10. PROVIDE 30A/2P, SINGLE THROW, MANUAL MOTOR CONTROLLER SNAP SWITCH IN NEMA 1 ENCLOSURE. HUBBELL #HBL7832D OR EQUAL. MAKE FINAL FLEXIBLE CONNECTION TO BLOWER COIL/ELECTRIC HEAT.
11. PROVIDE SWITCH IN ACCESSIBLE UNITS FOR CONTROL OF RANGE HOOD
12. IN ACCESSIBLE UNITS, INSTALL COUNTERTOP RECEPTACLES A MINIMUM 36" AWAY FROM CORNER PER FAIR HOUSING ACT DESIGN MANUAL CHAPTER 5 'SIDE REACH OVER AN OBSTRUCTION' REQUIREMENTS. WHERE AN OBSTRUCTION PREVENTS 36" DISTANCE REQUIREMENT, INSTALL RECEPTACLE AS FAR FROM CORNER AS POSSIBLE. PROVIDE ADDITIONAL OUTLETS WITHIN 36" OF CORNER TO ENSURE COMPLIANCE WITH NEC PACING REQUIREMENTS.
13. PROVIDE PUSH BUTTON AT 48" AFF FOR ANNUNCIATOR SYSTEM AT ALL ACCESSIBLE APARTMENTS AND ALSO AT APARTMENTS DESIGNATED FOR HEARING-IMPAIRED. REFER TO ARCH DRAWINGS FOR APPLICABLE ROOMS. REFER TO DETAIL 4, SHEET E6.1.
14. PROVIDE DOOR ANNUNCIATOR SYSTEM A/V HORN/STROBE DEVICE AND LOW VOLTAGE TRANSFORMER AT ALL ACCESSIBLE APARTMENTS AND ALSO AT APARTMENTS DESIGNATED FOR HEARING-IMPAIRED GUESTS. REFER TO ARCH DRAWINGS FOR APPLICABLE ROOMS. INSTALL HORN/STROBE APPLIANCE AT 80" AFF PER ADA. INSTALL TRANSFORMER IN DOUBLE GANG JUNCTION BOX ABOVE HORN/STROBE WITH BLANK COVER LATE AND PROVIDE LOW VOLTAGE CONTROL WIRING. REFER TO DETAIL 4, SHEET E6.1. PROVIDE ENGRAVED SIGN AT THE HORN/STROBE DEVICE TO READ "DOOR".

Wichita-Sedgwick County
Metropolitan Area Building
and Construction Department

REVIEWED FOR CODE COMPLIANCE

CORRECTIONS OR COMMENTS MADE ON THESE DRAWINGS AND THIS DOCUMENT DURING THIS REVIEW DO NOT RELIEVE CONTRACTOR FROM COMPLIANCE WITH ALL REQUIREMENTS OF THE CODE OF THE MABCD, THE CITY OF WICHITA OR SEDGWICK COUNTY. THIS REVIEW IS ONLY FOR GENERAL CONFORMANCE OF THE CODE. THE CONTRACTOR IS RESPONSIBLE FOR CONFORMING AND CORRELATING ALL TECHNIQUES OF CONSTRUCTION. THIS APPROVAL IS SUBJECT TO PROVISIONS OF SECTION 107.4 OF THE 2012 INTERNATIONAL BUILDING CODE.

DATE: 02/19/25 BY: William Jerauld Jr

LST Consulting Engineers, PA
Manhattan, Kansas
785.587.8042
Wichita, Kansas
316.285.0696
www.LSTengineers.com
mail@LSTengineers.com

Project 24061

JonesGillamRenz
730 N. Ninth
Salina, KS 67401
785.827.0386
1881 Main Street, Suite 301
Kansas City, MO 64108
jgr@jgrarchitects.com

THE RESIDENCE AT HERATIGE WEST

NEW SENIOR LIVING FACILITY

ANDOVER, KANSAS

ADAM PATRICK LIPP LICENSED 24155 KANSAS PROFESSIONAL ENGINEER
2025.01.10 16:40:30-06'00'

REVISIONS:

DATE: 01-10-2025
JOB: 24-3379
SHEET NO.:

E4.2

COPYRIGHTED ©

LIGHT FIXTURE SCHEDULE

MARK	MANUFACTURER	MODEL NUMBER	WATTAGE	LUMEN OUTPUT	DRIVER	MOUNTING	FINISH	DESCRIPTION	NOTES
A	---	---			STANDARD	CEILING SURFACE	---	SURFACE MOUNTED DOWNLIGHT SELECTED BY INTERIOR DESIGNER	13
B	SEAGULL	FML-WL-48-35	29 W		STANDARD	SURFACE WALL	WHITE	3 LAMP VANITY LIGHT	--
C	T-BAR LED	TBSL-MN-5-15-B2-B	40 W	2190 lm	0-10V DIMMING TO 10%	CEILING SURFACE	BLACK	5' T-BAR LED WITH BLOCK CLEAR DUFFUSING LENS INTEGRAL TO SUSPENDED CEILING	13
CE	T-BAR LED	TBSL-MN-5-15-B2-B	40 W	2190 lm	0-10V DIMMING TO 10%	CEILING SURFACE	BLACK	5' T-BAR LED WITH BLOCK CLEAR DUFFUSING LENS INTEGRAL TO SUSPENDED CEILING WITH EMERGENCY BATTERY BACKUP OPTION	13
D1	HALO	SMD6R6930WH	10 W	750 lm	0-10V DIMMING TO 10%	CEILING SURFACE	WHITE	6" DIA ROUND SURFACE MOUNT DOWNLIGHT	6
D2	HALO	SMD6R12930WH	15 W	1200 lm	0-10V DIMMING TO 10%	CEILING SURFACE	WHITE	6" DIA ROUND SURFACE MOUNT DOWNLIGHT	--
E1	LITHONIA	ELM6L UVOLT LTP	3 W		--	SURFACE WALL	WHITE	LED DUAL-HEAD EMERGENCY LIGHT	1
E2	LITHONIA	AFB-OEL-DDBTXD-UVOLT-N-WT	3 W		--	SURFACE WALL	WHITE	DIE-CAST ALUMINUM EMERGENCY LIGHT WITH POLYCARBONATE LENS, INTEGRAL BATTER	1,2,3
F1	DAY-BRITE CFI	FSS440L840-UNV-DIM	30 W	4077 lm	0-10V DIMMING TO 10%	CEILING SURFACE	WHITE	4' STANDARD STRIP WITH CURVED FROSTED ACRYLIC LENS	--
F2	DAY-BRITE CFI	FSS220L840-UNV-DIM	17 W	2049 lm	0-10V DIMMING TO 10%	CEILING SURFACE	WHITE	2' STANDARD STRIP WITH CURVED FROSTED ACRYLIC LENS	--
G	LITHOINA	WL4-40L-EZ1-LP830-MSD7-DIM50-E10WLCP	40 W	3927 lm	STANDARD	SURFACE WALL	WHITE	4 FT. WALL MOUNTED STAIRWELL LIGHT WITH EMERGENCY BATTERY BACKUP	8
H	LITHONIA	FMFL-30840-CAML-WH	35 W	2800 lm	STANDARD	SURFACE	WHITE	LED DECORATIVE SURFACE	--
J	---	---			STANDARD	SURFACE WALL	WHITE	VERTICAL VANITY LIGHT SELECTED BY INTERIOR DESIGNER	13
L	LIGHTOLIER	P6RDL15940MCL-Z10UI	12 W	1500 lm	STANDARD	SURFACE	WHITE	6" ROUND SURFACE MOUNTED DOWNLIGHT	1,4
M	GARDCO	GCS-A01-840-T3M-UNV	10 W	1500 lm	STANDARD	SURFACE WALL	WHITE	AREA WALL SCONCE WITH TYPE 3 IES DISTRIBUTION	17
N	GARDCO	GCM-B04-840-PEN-U-STP-UNV-FAWS	16 W	1611 lm	STANDARD	SURFACE WALL	WHITE	UP/DOWN WALL SCONCE WITH SPOT DISTRIBUTION	14,16
O	BOCA	NANO-X-3W-4000K-120V-120-A-H-E-LD-SQ	3 W	573 lm	STANDARD	SURFACE WALL	WHITE	1" LED 120° WALL WASH UP LIGHT	3,15
P	GARDCO	941L-21L-NW-LV-UNV	32 W	466 lm	STANDARD	SURFACE WALL	WHITE	LED STEP LIGHTS	3
R1	COOPER LIGHTING	GALN-SA1C-840-U-T2-HSS	57 W	7154 lm	LED DRIVER	ROUND POLE	BLACK	LED AREA LIGHT, SINGLE HEAD FULL CUT-OFF WITH IES TYPE II DISTRIBUTION AND HOUSE SIDE SHEILD	3,7,10
R2	COOPER LIGHTING	GALN-SA3C-840-U-T3-HSS	160 W	20812 lm	LED DRIVER	ROUND POLE	BLACK	LED AREA LIGHT, SINGLE HEAD FULL CUT-OFF WITH IES TYPE III DISTRIBUTION AND HOUSE SIDE SHEILD	3,7,11
R3	COOPER LIGHTING	GALN-SA3C-840-U-5WQ	160 W	21966 lm	LED DRIVER	ROUND POLE	BLACK	LED AREA LIGHT, SINGLE HEAD FULL CUT-OFF WITH IES TYPE V DISTRIBUTION	3,7,12
S	ACCLAIM	DFB-111-AKEU	50 W	2455 lm	STANDARD	GRADE	BLACK	IP-66 RATED, GRADE MOUNTED LED FLOOR LIGHT	
T	LITHOINA	FEM-L48-4000LM-IMAFL-WD-MVOLT-GZ10-35K-80CRI	24 W	3615 lm	STANDARD	SURFACE WALL	WHITE	4 FT. FULLY ENCLOSED AND GASKETED INDUSTRIAL FIXTURE WITH FROSTED, RIBBED, IMPACT-RESISTANT ACRYLIC LENS	--
X	LIFE SAFETY LIGHTING	LSXS2RWEMSDT			--	CEILING	WHITE	UNIVERSAL SINGLE/DOUBLE FACE POLYCARBONATE EXIT SIGN	
X1	LITHONIA	EDGR 1 R EL			--	CEILING	WHITE	SINGLE FACE LED EXIT SIGN	1,2
X3	LITHONIA	EDG 1 R EL WM			--	WALL	WHITE	SINGLE FACE LED EXIT SIGN	1,2
XE	LITHONIA	LHQM LED R HO			--	WALL	WHITE	COMBO EXIT/EMERGENCY LIGHTING UNIT	1,2

GENERAL:

- ALL LED FIXTURES SHALL ADHERE TO LM79 AND LM80 STANDARDS
- PROVIDE MANUFACTURER'S FLANGE KIT WHERE LAY-IN FIXTURES ARE TO BE INSTALLED IN GYP.
- ALL APARTMENT LIGHT FIXTURES SHALL BE ENERGY STAR CERTIFIED

NOTES:

1. PROVIDE FIXTURE WITH EMERGENCY BATTERY INTEGRAL CHARGER WITH SELF-DIAGNOSTIC/SELF-TESTING ELECTRONICS.
2. FIXTURE SHALL BE CAPABLE OF WALL OR CEILING MOUNT APPLICATIONS AND SHALL HAVE BREAK-OUT DIRECTIONAL CHEVRONS.
3. U.L. LISTED FOR 'WET LOCATION'.
4. U.L LISTED FOR 'DAMP LOCATION'.
5. FIXTURE TO COMPLY WITH NEC 410.16(C)(5).
6. WHERE INSTALLED IN BATHROOMS TO BE 'DAMP LOCATION' U.L. LISTED, WHERE ABOVE SHOWERS TO BE 'WET LOCATION' U.L. LISTED.
7. FIXTURE/POLE ASSEMBLY SHALL BE RATED FOR 100 MPH WIND LOADS. PROVIDE WITH VIBRATION DAMPER PER MANUFACTURER'S RECOMMENDATIONS.
8. PROVIDE FIXTURE WITH INTEGRAL OCCUPANCY SENSOR AND CONTROLS TO DIM FIXTURE TO 50% LIGHT OUTPUT WITH UNOCCUPIED.
9. WHERE INSTALLED IN FIRE RATED ASSEMBLY, PROVIDE FIRE RATED RECSSED LIGHT COVER EQUAL TO TENMAT FF109. VERIFY RATING REQUIREMENTS WITH ARCHITECT.
10. PROVIDE FIXTURE/POLE ASSEMBLY WITH 11' ROUND STRAIGHT STEEL POLE, BLACK TO MATCH FIXTURE. FIXTURE HEIGHT SHALL NOT EXCEED 7'-0".
11. PROVIDE FIXTURE/POLE ASSEMBLY WITH 14' ROUND STRAIGHT STEEL POLE, BLACK TO MATCH FIXTURE. FIXTURE HEIGHT SHALL NOT EXCEED 7'-0".
12. PROVIDE FIXTURE/POLE ASSEMBLY WITH 22' ROUND STRAIGHT STEEL POLE, BLACK TO MATCH FIXTURE. FIXTURE HEIGHT SHALL NOT EXCEED 7'-0".
13. FIXTURE TO BE SELECTED BY INTERIOR DESIGNER, COORDINATE ALL REQUIREMENTS WITH INTERIOR DESIGNER.
14. CONTRACTOR SHALL ADJUST LUMEN OUTPUT AS DIRECTED BY OWNER. COORDINATION SHALL OCCUR AFTER DARK TO ENSURE DESIRED ILLUMINATION.
15. INSTALL FIXTURE 41' ABOVE FIRST FLOOR FINISHED FLOOR.
16. INSTALL FIXTURE 10' ABOVE FINISHED FLOOR.
17. INSTALL FIXTURE 7' ABOVE FINISHED FLOOR.

Wichita-Sedgwick County
Metropolitan Area Building
and Construction Department

REVIEWED FOR CODE COMPLIANCE

CORRECTIONS OR COMMENTS MADE ON THESE DRAWINGS AND THIS DOCUMENT DURING THIS REVIEW DO NOT RELIEVE CONTRACTOR FROM COMPLIANCE WITH ALL REQUIREMENTS OF THE CODE OF THE MABCD, THE CITY OF WICHITA OR SEDGWICK COUNTY. THIS REVIEW IS ONLY FOR GENERAL CONFORMANCE OF THE CODE. THE CONTRACTOR IS RESPONSIBLE FOR CONFORMING AND CORRELATING ALL TECHNIQUES OF CONSTRUCTION. THIS APPROVAL IS SUBJECT TO PROVISIONS OF SECTION 107.4 OF THE 2012 INTERNATIONAL BUILDING CODE.

DATE: 02/19/25 BY: William Jerauld Jr

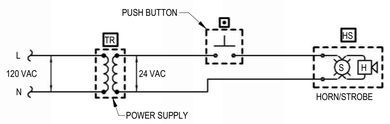

DOOR ALARM BUZZER SYSTEM NOTES

1. PROVIDE DOOR ANNUNCIATOR SYSTEM COMPLETE WITH PUSH BUTTON, HORN/STROBE(S), POWER SUPPLIES AND ALL WIRING REQUIRED. HORN/STROBE SHALL ACTIVATE WHEN PUSH BUTTON IS DEPRESSED.
2. HORN/STROBE SHALL OPERATE AT 24VAC, HAVE A CLEAR LENS WITH 50cd STROBE AND HORN WITH 82dB AT 10', UL 1638 LISTED, EDWARDS #6536-G5. FLUSH MOUNT IN WALL AT 6'-8" AFF.
3. PUSH BUTTON SHALL BE SELECTED BY INTERIOR DESIGNER, MOUNT AT 48" AFF. ENSURE COMPATIBILITY WITH ACCESSIBLE UNIT HORN STROBE.
4. POWER SUPPLY SHALL BE A LOW VOLTAGE CLASS 2 TRANSFORMER COMPATIBLE WITH DOORBELL SELECTED BY INTERIOR DESIGNER. FLUSH MOUNT IN 2-GANG WALL BOX WITH BLANK COVER PLATE, DIRECTLY ABOVE HORN/STROBE.
5. LOW VOLTAGE CLASS 2 CABLING SHALL BE MINIMUM 18 AWG UNSHIELDED.

4 E6.1 ACCESSIBLE APARTMENT DOORBELL WIRING SCHEMATIC
NO SCALE

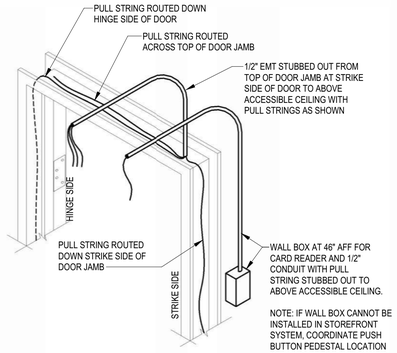

3 E6.1 DOOR ACCESS CONTROL ROUGH-IN DIAGRAM
NO SCALE

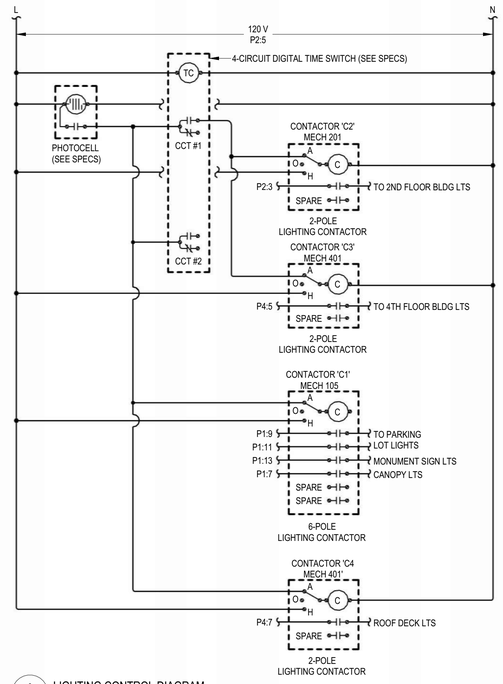

2 E6.1 LIGHTING CONTROL DIAGRAM
NO SCALE

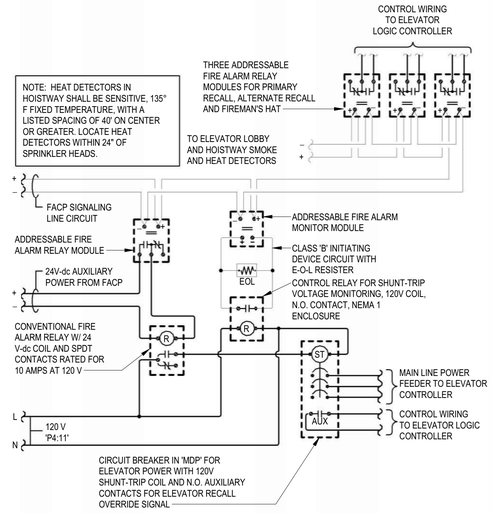

ELEVATOR RECALL AND SHUT-DOWN SEQUENCE OF OPERATION:

1. UPON SENSING SMOKE FROM ONE OR MORE ELEVATOR LOBBY OR HOISTWAY, THE SMOKE DETECTOR SHALL SIGNAL THE FIRE ALARM CONTROL PANEL, WHICH WILL FORWARD THE SIGNAL TO THE ELEVATOR LOGIC CONTROLLER VIA ADDRESSABLE RELAY MODULES TO RECALL ELEVATOR CAB TO THE PRIMARY RECALL FLOOR. IF PRIMARY RECALL FLOOR'S LOBBY SMOKE DETECTOR SENSES SMOKE AT THAT FLOOR, THE ELEVATOR CONTROLLER WILL SEND THE ELEVATOR CAB TO THE NEXT FLOOR CLEAR OF SMOKE. ONCE THE ELEVATOR CAB HAS REACHED THE DESIGNATED FLOOR, THE ELEVATOR CAB DOORS WILL OPEN AND THE CONTROLLER WILL LOCK THE ELEVATOR CAB AT THAT FLOOR, DISABLING THE ELEVATOR CAB CONTROLS, UNLESS A FIREMAN'S KEY IS USED TO OVERRIDE AUTOMATIC CONTROLS.
2. ALL SMOKE DETECTORS ASSOCIATED WITH ELEVATOR RECALL (LOBBY AND HOISTWAY) SHALL TRANSMIT A SEPARATE AND DISTINCT VISIBLE ANNUNCIATION AT THE FIRE ALARM CONTROL PANEL.
3. UPON SENSING A HEAT ALARM CONDITION IN THE ELEVATOR HOISTWAY, THE HEAT DETECTOR SHALL SIGNAL THE FIRE ALARM CONTROL PANEL, WHICH WILL FORWARD THE SIGNAL TO THE ADDRESSABLE RELAY MODULE TO ACTIVATE (VIA A CONVENTIONAL FIRE ALARM RELAY) THE SHUNT-TRIP BREAKER POWERING THE ELEVATOR SO AS TO DISCONNECT POWER TO THAT CIRCUIT. THIS IS TO BE A NON-AUTO RESET SWITCH. WHEN THE SPRINKLER HEAD HAS REACHED ITS CRITICAL TEMPERATURE OF 165° F., THE HEAD WILL BEGIN DISCHARGE OF WATER.

1 E6.1 ELEVATOR RECALL AND SHUT-DOWN WIRING DIAGRAM
NO SCALE

LST Consulting Engineers, PA
Manhattan, Kansas
785.587.8042
Wichita, Kansas
316.285.0696
www.LSTengineers.com
mail@LSTengineers.com

Project 24061

JonesGillamRenz
730 N. Ninth
Salina, KS 67401
785.827.0386
1881 Main Street, Suite 301
Kansas City, MO 64108
jgr@jgrarchitects.com

THE RESIDENCE AT HERATIGE WEST

NEW SENIOR LIVING FACILITY

ANDOVER, KANSAS



REVISIONS:

DATE: 01-10-2025
JOB: 24-3379
SHEET NO.:

E6.1

© COPYRIGHTED

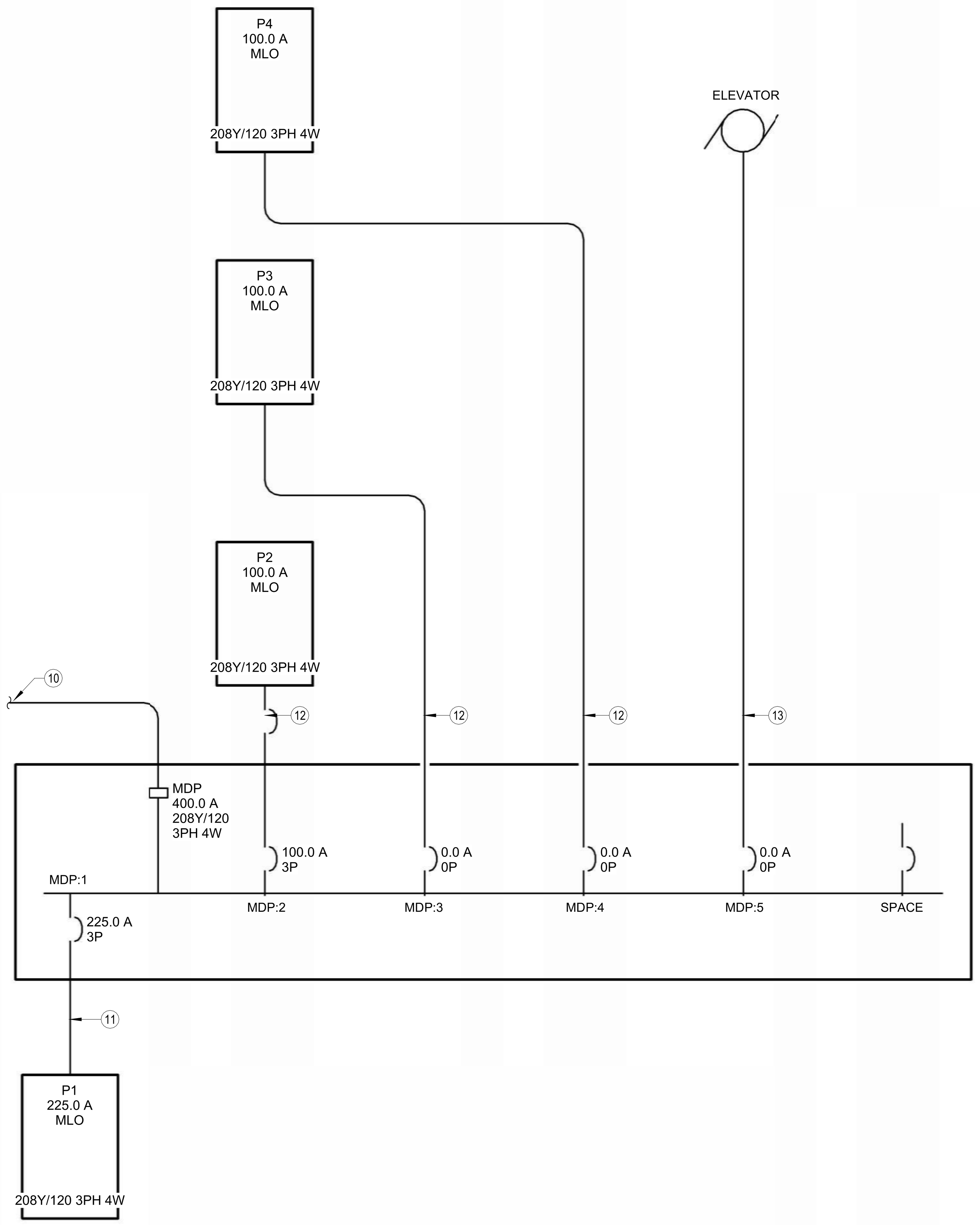

2 E6.2 HOUSE ELECTRIC SERVICE RISER DIAGRAM
1" = 1'-0"

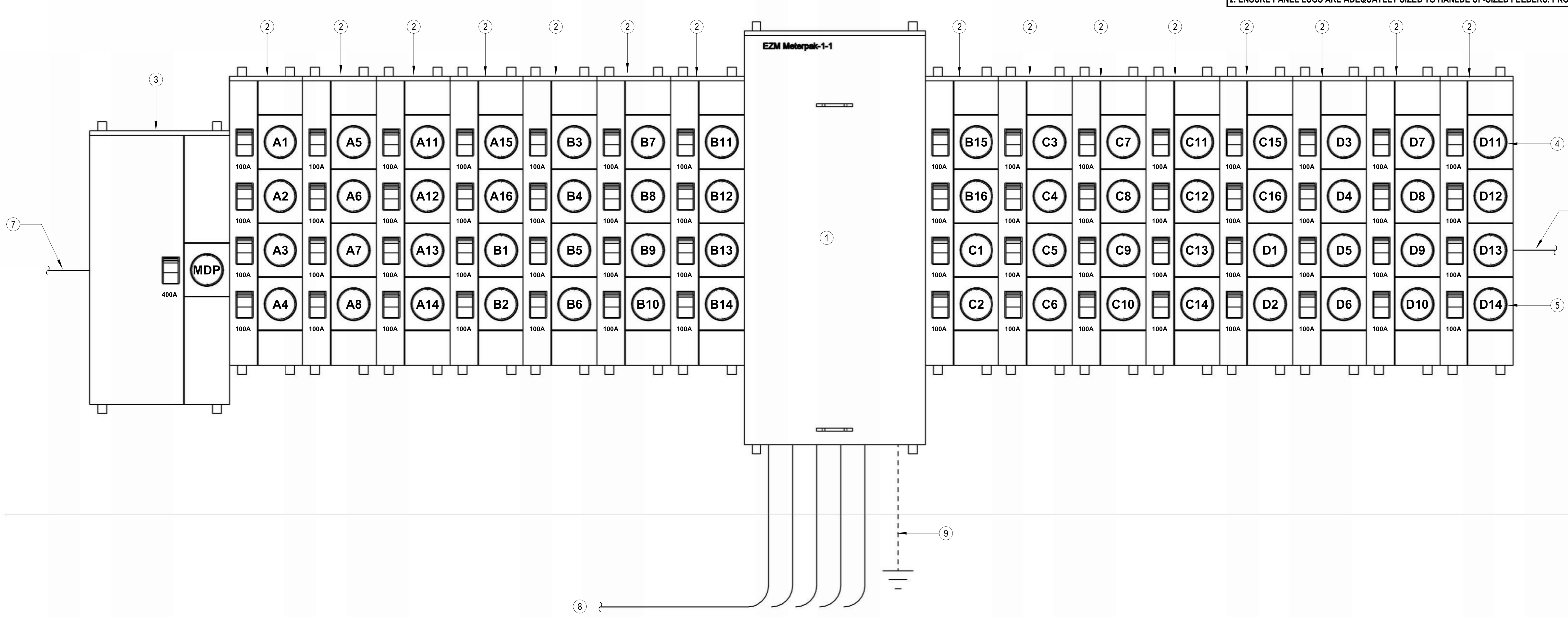

1 E6.2 ELECTRICAL RISER DIAGRAM
1" = 1'-0"

DWELLING UNIT FEEDER CALCULATION

UNIT TYPE: 2BR

AREA: 800 SF

FEEDER AND SERVICE LOADS PER NEC 220.82 PART IV

					Connected Load (VA)	Demand Load (VA)
(B)	*General Loads*					
(B1)	General Lighting and Receptacles (220.82 (B)(1))					
	a) Lighting and Receptacles	3 VA per Square Foot			2400 VA	
(B2)	Small Appliance & Laundry Branch Circuits (220.82 (B)(2))					
	a) Laundry Circuit	1500 VA per Circuit	1 Circuit		1500 VA	
	b) Kitchen Circuits	1500 VA per Circuit	2 Circuits		3000 VA	
(B3)	Nameplate Ratings of Equipment (220.82 (B)(3))					
	a1) Dishwasher	840 VA each	Qty.	1	840 VA	
	a2) Refrigerator	1000 VA each	Qty.	1	1000 VA	
	a3) Microwave	1000 VA each	Qty.	1	1000 VA	
	a4) Disposal	1175 VA each	Qty.	1	1175 VA	
	b) Electric Range	8000 VA each	Qty.	1	8000 VA	
	c) Clothes Dryer	5000 VA each	Qty.	1	5000 VA	
	d) Water Heater	4500 VA each	Qty.	1	4500 VA	
(B4)	Nameplate Ratings of Motors (220.82 (B)(4))					
	a) HVAC Blower Fan	336 VA each	Qty.	1	336 VA	
	b) Exhaust Fans	21 VA each	Qty.	1	21 VA	
		Part (B) Connect Load Total			28772 VA	
	Part (B) Demand Load Total (100% of 1st 10 KVA + 40% of remainder)					17509 VA
(C)	*Heating and Air Conditioning Load*					
(C1)	100% Namplate Rating of Air Conditioner (220.82 (C)(1))					
	a) A/C Unit #1	0 VA each	Qty.	0	0 VA	
	b) A/C Unit #2	0 VA each	Qty.	0	0 VA	
		Part (C1) Connect Load Total			0 VA	
(C2)	100% Namplate Rating of Heat Pump w/o Supplemental Heat (220.82 (C)(2))					
	a) Heat Pump Unit #1	0 VA each	Qty.	0	0 VA	
	b) Heat Pump Unit #2	0 VA each	Qty.	0	0 VA	
		Part (C2) Connect Load Total			0 VA	
(C3)	100% of Heat Pump & 65% Supplemental Electric Heat (220.82 (C)(3))					
	a1) Heat Pump Unit #1	0 VA each	Qty.	0	0 VA	
	a2) Electric Heat #1	0 VA each	Qty.	0	0 VA	
	b1) Heat Pump Unit #2	0 VA each	Qty.	0	0 VA	
	b2) Electric Heat #2	0 VA each	Qty.	0	0 VA	
		Part (C3) Connect Load Total			0 VA	
(C4)	65% of Total Electric Heat if < 4 Separately Controlled Units (220.82 (C)(4))					
	a) Electric Heat #1	3900 VA each	Qty.	1	2535 VA	
	b) Electric Heat #2	0 VA each	Qty.	0	0 VA	
		Part (C4) Connect Load Total			2535 VA	
(C5)	40% of Total Electric Heat if > 4 Separately Controlled Units (220.82 (C)(5))					
	a) Electric Heat #1	0 VA each	Qty.	0	0 VA	
	b) Electric Heat #2	0 VA each	Qty.	0	0 VA	
		Part (C5) Connect Load Total			0 VA	
		Part (C) Connect Load Total			2535 VA	
		Part (C) Demand Load (Largest of C1 - C5)				2535 VA
		Total Dwelling Unit Demand (VA)				20044 VA
		Total Amps @ 208 V /120V-1Ph-3W				96.4 A

Provide 100A Load Center & Feed with 100A/2P Breaker

DWELLING UNIT FEEDER CALCULATION

UNIT TYPE: 1BR

AREA: 650 SF

FEEDER AND SERVICE LOADS PER NEC 220.82 PART IV

					Connected Load (VA)	Demand Load (VA)
(B)	*General Loads*					
(B1)	General Lighting and Receptacles (220.82 (B)(1))					
	a) Lighting and Receptacles	3 VA per Square Foot			1950 VA	
(B2)	Small Appliance & Laundry Branch Circuits (220.82 (B)(2))					
	a) Laundry Circuit	1500 VA per Circuit	1 Circuit		1500 VA	
	b) Kitchen Circuits	1500 VA per Circuit	2 Circuits		3000 VA	
(B3)	Nameplate Ratings of Equipment (220.82 (B)(3))					
	a1) Dishwasher	840 VA each	Qty.	1	840 VA	
	a2) Refrigerator	1000 VA each	Qty.	1	1000 VA	
	a3) Microwave	1000 VA each	Qty.	1	1000 VA	
	a4) Disposal	1175 VA each	Qty.	1	1175 VA	
	b) Electric Range	8000 VA each	Qty.	1	8000 VA	
	c) Clothes Dryer	5000 VA each	Qty.	1	5000 VA	
	d) Water Heater	4500 VA each	Qty.	1	4500 VA	
(B4)	Nameplate Ratings of Motors (220.82 (B)(4))					
	a) HVAC Blower Fan	336 VA each	Qty.	1	336 VA	
	b) Exhaust Fans	21 VA each	Qty.	1	21 VA	
		Part (B) Connect Load Total			28322 VA	
	Part (B) Demand Load Total (100% of 1st 10 KVA + 40% of remainder)					17329 VA
(C)	*Heating and Air Conditioning Load*					
(C1)	100% Namplate Rating of Air Conditioner (220.82 (C)(1))					
	a) A/C Unit #1	0 VA each	Qty.	0	0 VA	
	b) A/C Unit #2	0 VA each	Qty.	0	0 VA	
		Part (C1) Connect Load Total			0 VA	
(C2)	100% Namplate Rating of Heat Pump w/o Supplemental Heat (220.82 (C)(2))					
	a) Heat Pump Unit #1	0 VA each	Qty.	0	0 VA	
	b) Heat Pump Unit #2	0 VA each	Qty.	0	0 VA	
		Part (C2) Connect Load Total			0 VA	
(C3)	100% of Heat Pump & 65% Supplemental Electric Heat (220.82 (C)(3))					
	a1) Heat Pump Unit #1	0 VA each	Qty.	0	0 VA	
	a2) Electric Heat #1	0 VA each	Qty.	0	0 VA	
	b1) Heat Pump Unit #2	0 VA each	Qty.	0	0 VA	
	b2) Electric Heat #2	0 VA each	Qty.	0	0 VA	
		Part (C3) Connect Load Total			0 VA	
(C4)	65% of Total Electric Heat if < 4 Separately Controlled Units (220.82 (C)(4))					
	a) Electric Heat #1	3900 VA each	Qty.	1	2535 VA	
	b) Electric Heat #2	0 VA each	Qty.	0	0 VA	
		Part (C4) Connect Load Total			2535 VA	
(C5)	40% of Total Electric Heat if > 4 Separately Controlled Units (220.82 (C)(5))					
	a) Electric Heat #1	0 VA each	Qty.	0	0 VA	
	b) Electric Heat #2	0 VA each	Qty.	0	0 VA	
		Part (C5) Connect Load Total			0 VA	
		Part (C) Connect Load Total			2535 VA	
		Part (C) Demand Load (Largest of C1 - C5)				2535 VA
		Total Dwelling Unit Demand (VA)				19864 VA
		Total Amps @ 208 V /120V-1Ph-3W				95.5 A

Provide 100A Load Center & Feed with 100A/2P Breaker

Wichita-Sedgwick County
Metropolitan Area Building
and Construction Department

REVIEWED FOR CODE COMPLIANCE

CORRECTIONS OR COMMENTS MADE ON THESE DRAWINGS AND THIS DOCUMENT DURING THIS REVIEW DO NOT RELIEVE CONTRACTOR FROM COMPLIANCE WITH ALL REQUIREMENTS OF THE CODE OF THE MABCD, THE CITY OF WICHITA OR SEDGWICK COUNTY. THIS REVIEW IS ONLY FOR GENERAL CONFORMANCE OF THE CODE. THE CONTRACTOR IS RESPONSIBLE FOR CONFORMING AND CORRELATING ALL TECHNIQUES OF CONSTRUCTION. THIS APPROVAL IS SUBJECT TO PROVISIONS OF SECTION 107.4 OF THE 2012 INTERNATIONAL BUILDING CODE.

DATE: 02/19/25 BY: William Jerauld Jr

METER CENTER DEMAND CALCULATION

DWELLING UNIT QTY: 60

AREA: 43500 SF

FEEDER AND SERVICE LOADS PER NEC 220.84 PART IV

					Connected Load (VA)	Demand Load (VA)
(C)	*Calculated Loads*					
(C1)	General Lighting and Receptacles (220.84 (C)(1))					
	a) Lighting and Receptacles	3 VA per Square Foot			130500 VA	
(C2)	Required Circuits (220.84 (C)(2))					
	a) Laundry Circuit	1500 VA per Circuit	60 Circuits		90000 VA	
	b) Kitchen Circuits	1500 VA per Circuit	120 Circuits		180000 VA	
(C3)	Nameplate Ratings of Equipment (220.84 (C)(3))					
	a1) Dishwasher	840 VA each	Qty.	60	50400 VA	
	a2) Refrigerator	1000 VA each	Qty.	60	60000 VA	
	a3) Microwave	1000 VA each	Qty.	60	60000 VA	
	a4) Disposal	1175 VA each	Qty.	60	70500 VA	
	b) Electric Range	8000 VA each	Qty.	60	480000 VA	
	c) Clothes Dryer	5000 VA each	Qty.	60	300000 VA	
	d) Water Heater	4500 VA each	Qty.	60	270000 VA	
(C4)	Nameplate Ratings of Motors (220.84 (C)(4))					
	a) HVAC Blower Fan	336 VA each	Qty.	30	10080 VA	
	b) Exhaust Fans	21 VA each	Qty.	30	630 VA	
(C5)	Larger of A/C or Electric Heat (220.84 (C)(5))					
	a) A/C or Heat #1	3900 VA each	Qty.	30	117000 VA	
	b) A/C or Heat #2	0 VA each	Qty.	0	0 VA	
		Connected Load Total			1819110 VA	

Dwelling Unit Demand Factor from Table 220.84 = 0.24

Total Apartment Demand (VA)	436586 VA
Total House Load Demand (VA)	115000 VA
Total Building Demand (VA)	551586 VA
Total Meter Center Demand Load (Amperes) @ 208 V /120V- 3 Ph, 4 W	1531.1 A

Provide 1600A Meter Center

APARTMENT FEEDER SCHEDULE (COPPER)

APARTMENT PANEL NUMBER	FEEDER SIZE
A1, A2, A3, A4, A5, A6, A7, B1, B2, B3, B4, B5, B6, C1, C2, C3, C4, C5, D1, D2, D3, D4, D5,	(3)#1, #8G, 1-1/4"C.
A8, B8, B9, C6, C7, C8, C9, D6, D7	(3)#1/0, #6G, 1-1/2"C.
A11, B10, C10, D8, D9, D10	(3)#2/0, #4G, 2"C.
A12, A13, B11, B12, C11, C12, D11	(3)#3/0, #4G, 2"C.
A14, A15, A16, B13, B14, B15, B16, C13, C14, C15, C16, D12, D13, D14	(3)#4/0, #4G, 2"C.

NOTES:
1. VOLTAGE DROP HAS BEEN ACCOUNTED FOR IN SIZES INDICATED, FURTHER UPSIZING OF FEEDERS IS NOT...
2. ENSURE PANEL LUGS ARE ADEQUATELY SIZED TO HANLDE UP-SIZED FEEDERS. PROVIDE LUG ADAPTER KI...

APARTMENT FEEDER SCHEDULE (ALUMINUM)

APARTMENT PANEL NUMBER	FEEDER SIZE
A1, A2, A3, A4, A5, B1, B2, B3, B4, C1, C2, C3, D1, D2, D3	(3)#1, #8G, 1-1/4"C.
B5, C4, C5, D4	(3)#1/0, #6G, 1-1/2"C.
A6, A7, B6, B7, D5	(3)#2/0, #4G, 2"C.
A8, B8, B9, C6, C7, D6, D7	(3)#3/0, #3G, 2"C.
A11, B10, C8, C9, C10, D8, D9, D10	(3)#4/0, #2G, 2"C.
A12, A13, B11, B12, C11	(3)#250 KCMIL, #1G, 2-1/2"C.
A14, B13, C12, C13, D11, D12	(3)#300 KCMIL, #1/0G, 2-1/2"C.
A15, A16, B14, C14, D13	(3)#350 KCMIL, #2/0G, 2-1/2"C.
B15, B16, C15, C16, D14	(3)#400 KCMIL, #2/0G, 2-1/2"C.

NOTES:
1. VOLTAGE DROP HAS BEEN ACCOUNTED FOR IN SIZES INDICATED, FURTHER UPSIZING OF FEEDERS IS NOT NECESSARY
2. ENSURE PANEL LUGS ARE ADEQUATELY SIZED TO HANLDE UP-SIZED FEEDERS. PROVIDE LUG ADAPTER KITS IF REQUIRED.

NOTES BY SYMBOL

1 METER CENTER MAIN, 3-PH IN; 3-PH OUT, 208/120V-3PH, 4 WIRE WITH 1000A/3P MAIN BREAKER, 65 KAIC RATED, SERVICE ENTRANCE RATED WITH INTEGRAL SURGE PROTECTION DEVICE. SQUARE D 'EZ METER-PAK' #EZM31000CB.
2 5-SOCKET BRANCH UNITS, 3-PH IN; 1-PH OUT, WITH (5) 100A BRANCH BREAKERS AS INDICATED. METER SOCKETS SHALL BE RINGLESS TYPE, 5-JAW WITH HORN BYPASS SQUARE D 'EZ METER-PAK' #EZMH315125. PROVIDE PERMANENT LABEL ON EACH METER SOCKET BREAKER INDICATING THE APARTMENT BEING SERVED.
3 1-SOCKET BRANCH UNITS, 3-PH IN; 3-PH OUT, WITH (1) 400A BRANCH BREAKER. METER SOCKETS SHALL BE RINGLESS TYPE, 5-JAW WITH HORN BYPASS SQUARE D 'EZ METER-PAK' #EZMH331400. PROVIDE PERMANENT LABEL ON METER SOCKET BREAKER TO READ 'HOUSE'.
4 MAXIMUM HEIGHT TO CENTERLINE OF TOP METER SOCKET SHALL BE 5'-6" AFG.
5 MINIMUM HEIGHT TO BOTTOM OF METER SOCKET ASSEMBLY SHALL BE 18" AFG.
6 SEE FEEDER SCHEDULE, THIS SHEET FOR SIZES TO APARTMENT UNIT LOAD CENTERS.
7 (2) PARALLEL 2" CONDUITS, EACH WITH (4) #3/0 KCMIL, #3G COPPER, OR (2) PARALLEL 3" CONDUITS, EACH WITH (4)#300KCMIL, #2/0 GROUND ALUMINUM TO PANEL 'MDP'.
8 (5) PARALLEL 4" CONDUITS EACH WITH (4) #400 KCMIL COPPER FROM TRANSFORMER TO METER CENTER.
9 #3/0 CU GROUNDING ELECTRODE CONDUCTOR TO CONCRETE ENCASED ELECTRODE, UNDERGROUND METAL WATER PIPE, AND DRIVEN GROUND ROD. BOND ALL ITEMS IN ACCORDANCE WITH NEC ARTICLE 250.
10 SEE 1:E6.2 FOR CONTINUATION.
11 (4)#3/0, #6G., 2"C.
12 (4)#1, #8G., 1-1/2"C.
13 (4)#4, #10G., 1"C.

NOTES:
- Meter Center main circuit breaker shall be 65 kAIC fully rated. Feeder breakers may be series rated with main breaker for a 42 kAIC rating.
- All conductor sizes are based on copper, U.N.O.
- Entire installation shall comply with NEC.
- Coordinate all responsibilities and requirements with power utility company and pay associated fees.
  Contact Information:
  Evergy
  Abby Brungardt
  TD Design IV
  (785) 508-2715
  Abby.Brungardt@evergy.com
- Coordinate final location of meter assemblies with utility company. Provide shop drawings of proposed equipment whether as specified or substituted to utility company for approval.
- All meter center components shall be NEMA 3R.
- All dimensions based on Square D equipment. It is the contractor's responsibility to verify the dimensions of substitute equipment.
- For each meter, provide a permanent brass, copper or aluminum tag identifying the apartment served. Tags shall be securely fastened to the meter base and be stamped with 1/8" letters, minimum.

LST Consulting Engineers, PA
Manhattan, Kansas
785.587.8042
Wichita, Kansas
316.285.0696
www.LSTengineers.com
mail@LSTengineers.com
Project 24061

JGR JonesGillamRenz
730 N. Ninth
Salina, KS 67401
785.827.0386
1881 Main Street, Suite 301
Kansas City, MO 64108
jgr@jgrarchitects.com

THE RESIDENCE AT HERATIGE WEST
NEW SENIOR LIVING FACILITY
ANDOVER, KANSAS

BRIAN PATRICK LIES
LICENSED
24155
KANSAS
PROFESSIONAL ENGINEER
2025.01.10
16:41:45-06'00'

REVISIONS:

DATE: 01-10-2025
JOB: 24-3379
SHEET NO.:

E6.2

COPYRIGHTED ©

Wichita-Sedgwick County
Metropolitan Area Building
and Construction Department

REVIEWED FOR CODE COMPLIANCE

CORRECTIONS OR COMMENTS MADE ON THESE DRAWINGS AND THIS DOCUMENT DURING THIS REVIEW DO NOT RELIEVE CONTRACTOR FROM COMPLIANCE WITH ALL REQUIREMENTS OF THE CODE OF THE MABCD, THE CITY OF WICHITA OR SEDGWICK COUNTY. THIS REVIEW IS ONLY FOR GENERAL CONFORMANCE OF THE CODE. THE CONTRACTOR IS RESPONSIBLE FOR CONFORMING AND CORRELATING ALL TECHNIQUES OF CONSTRUCTION. THIS APPROVAL IS SUBJECT TO PROVISIONS OF SECTION 107.4 OF THE 2012 INTERNATIONAL BUILDING CODE.

DATE: 02/19/25 BY: William Jerauld Jr

Designation: P2

Installed Location: Mech 201
Voltage: 208Y/120 3PH 4W-3Ph-4W
Mounting: Surface
Enclosure: NEMA 1

Bus Amps: 100
MCB Amps: MLO
Features & Modifications: -

SCCR/AIC: 22.0 kA
Mains FN/Note: -

Ckt	Description	Circuitry	Trip (A)	FN	A	B	C	FN	Trip (A)	Circuitry	Description	Ckt
P2:1	LTG - 2nd Floor Mech, Halls, Stairs	1/2"C,1#12,#12N,#12G	20		67...	54...			20	1/2"C,1#12,#12N,#12G	RCPT - Hall 202	P2:2
P2:3	LTG - Exterior Up/Dn Lights	1/2"C,1#12,#12N,#12G	20			19...	54...		20	1/2"C,1#12,#12N,#12G	RCPT - Hall 203	P2:4
P2:5	Exterior Lighting Controls	1/2"C,1#12,#12N,#12G	20				50...	10...	20	1/2"C,1#12,#12N,#12G	RCPT - Telecomm Backboard	P2:6
P2:7	Elevator Sump Pump Control Panel	1/2"C,1#12,#12N,#12G	20		36...	10...			20	1/2"C,1#12,#12N,#12G	RCPT - Telecomm Backboard	P2:8
P2:9	RCPT - Elevator Sump Pump	1/2"C,1#12,#12N,#12G	20			18...	20...		30	1/2"C,2#10,#10G	Blower Coil 'BC-1' - Second Floor Halls	P2:10
P2:11	Spare	--	20				0 VA	20...				P2:12
P2:13	Spare	--	20		0 VA	40...			50	3/4"C,2#6,#10G	Blower Coil 'BC-3' - First Floor Lobby	P2:14
P2:15	Space	--	--			--	40...					P2:16
P2:17	Space	--	--				--	--	--	--	Space	P2:18
P2:19	Space	--	--		--	--			--	--	Space	P2:20
P2:21	Space	--	--			--	--		--	--	Space	P2:22
P2:23	Space	--	--				--	--	--	--	Space	P2:24
				Connected Load:	6599 VA	7031 VA	3141 VA					
				Connected Amps:	59.4 A	63.0 A	26.2 A					

Designation: P3

Installed Location: Mech 301
Voltage: 208Y/120 3PH 4W-3Ph-4W
Mounting: Surface
Enclosure: NEMA 1

Bus Amps: 100
MCB Amps: MLO
Features & Modifications: -

SCCR/AIC: 22.0 kA
Mains FN/Note: -

Ckt	Description	Circuitry	Trip (A)	FN	A	B	C	FN	Trip (A)	Circuitry	Description	Ckt
P3:1	LTG - 3rd Floor Mech, Halls, Stairs	1/2"C,1#12,#12N,#12G	20		67...	54...			20	1/2"C,1#12,#12N,#12G	RCPT - Hall 302	P3:2
P3:3	Blower Coil 'BC-1' - Third Floor Halls	1/2"C,2#10,#10G	30			20...	54...		20	1/2"C,1#12,#12N,#12G	RCPT - Hall 303	P3:4
P3:5							20...	10...	20	1/2"C,1#12,#12N,#12G	RCPT - Telecomm Backboard	P3:6
P3:7	Spare	--	20		0 VA	10...			20	1/2"C,1#12,#12N,#12G	RCPT - Telecomm Backboard	P3:8
P3:9	Spare	--	20			0 VA	--		--	--	Space	P3:10
P3:11	Space	--	--				--	--	--	--	Space	P3:12
P3:13	Space	--	--		--	--			--	--	Space	P3:14
P3:15	Space	--	--			--	--		--	--	Space	P3:16
P3:17	Space	--	--				--	--	--	--	Space	P3:18
P3:19	Space	--	--		--	--			--	--	Space	P3:20
P3:21	Space	--	--			--	--		--	--	Space	P3:22
P3:23	Space	--	--				--	--	--	--	Space	P3:24
				Connected Load:	2214 VA	2631 VA	3091 VA					
				Connected Amps:	18.5 A	22.5 A	26.3 A					

Designation: P4

Installed Location: Mech 401
Voltage: 208Y/120 3PH 4W-3Ph-4W
Mounting: Surface
Enclosure: NEMA 1

Bus Amps: 100
MCB Amps: MLO
Features & Modifications: -

SCCR/AIC: 22.0 kA
Mains FN/Note: -

Ckt	Description	Circuitry	Trip (A)	FN	A	B	C	FN	Trip (A)	Circuitry	Description	Ckt
P4:1	LTG - 4th Floor Mech, Hall and Stairs	1/2"C,1#12,#12N,#12G	20		64...	18...			20	1/2"C,1#10,#10N,#10G	Electric Wall Heater - Hall 403	P4:2
P4:3	LTG - Elevator Hoistway	1/2"C,1#12,#12N,#12G	20			24...	54...		20	1/2"C,1#12,#12N,#12G	RCPT - Hall 402	P4:4
P4:5	LTG - Exterior Facade Lighting	1/2"C,1#12,#12N,#12G	20				93...	54...	20	1/2"C,1#12,#12N,#12G	RCPT - Hall 403	P4:6
P4:7	LTG - Roof Patio	1/2"C,1#12,#12N,#12G	20		22...	90...			20	1/2"C,1#12,#12N,#12G	RCPT - Rooftop	P4:8
P4:9	RCPT - Elevator Hoistway	1/2"C,1#12,#12N,#12G	20			18...	14...		20	1/2"C,1#10,#10N,#10G	Future Radon Fan	P4:10
P4:11	Other	1/2"C,1#12,#12N,#12G	20				36...	10...	20	1/2"C,1#12,#12N,#12G	Future Radon Fan	P4:12
P4:13	Heat Pump 'HP-2' - Fitness	1/2"C,2#12,#12G	20		12...	20...			30	1/2"C,2#10,#10G	Blower Coil 'BC-1A' - Fourth Floor Hall	P4:14
P4:15						12...	20...					P4:16
P4:17	Heat Pump 'HP-3' - Lobby/Office	1/2"C,2#10,#10G	30				17...	11...	20	1/2"C,2#10,#10G	Heat Pump 'HP-1' - North Stairs	P4:18
P4:19					17...	11...						P4:20
P4:21	Heat Pump 'HP-1' - First Floor Halls	1/2"C,2#12,#12G	20			11...	11...		20	1/2"C,2#12,#12G	Heat Pump 'HP-1' - South Stairs	P4:22
P4:23							11...	11...				P4:24
P4:25	Heat Pump 'HP-1' - Second Floor Halls	1/2"C,2#12,#12G	20		11...	0 VA			20	--	Spare	P4:26
P4:27						11...	0 VA		20	--	Spare	P4:28
P4:29	Heat Pump 'HP-1' - Third Floor Halls	1/2"C,2#12,#12G	20				11...	--	--	--	Space	P4:30
P4:31					11...	--			--	--	Space	P4:32
P4:33	Heat Pump 'HP-1' - Fourth Floor Halls	1/2"C,2#12,#12G	20			11...	--		--	--	Space	P4:34
P4:35							11...	--	--	--	Space	P4:36
P4:37	Space	--	--		--	--			--	--	Space	P4:38
P4:39	Space	--	--			--	--		--	--	Space	P4:40
P4:41	Space	--	--				--	--	--	--	Space	P4:42
				Connected Load:	12219 VA	10280 VA	9790 VA					
				Connected Amps:	102.5 A	86.3 A	81.6 A					

Panelboard: MDP

Location: Mech 201
Supply: Meter Center
Mounting: Surface
Enclosure: NEMA 1
Features & Modifications: -

Voltage: 208 V, 3 Ø, 4 W
Bus Rating: 400 A
Neutral: 100%
Mains Type: MLO
Mains Rating: 400 A
Mains FN/Note: -
SCCR: 22 kA

Ckt	Description	Frame (A)	Trip (A)	Poles	FN/Note	Load
MD...	P1	225	225	3		47172
MD...	P2	100	100	3		16771
MD...	P3	100	100	3		7935
MD...	P4	100	100	3		32289
MD...	Elevator	60	60	3		15500
MD...	100A Bussed Space	--	--	3		--

Load Summary

Load Classification	Connected	Factor	Demand	Panel Totals	
Motor	297 VA	110.00%	327 VA	**Connected Load:**	120 kVA
Other	4680 VA	100.00%	4680 VA	**Connected Current:**	332 A
Lighting - Interior	7247 VA	125.00%	9059 VA	**Demand Load:**	131 kVA
Receptacle - General	15960 VA	81.33%	12980 VA	**Demand Current:**	364 A
Receptacle - Dedicated	5800 VA	100.00%	5800 VA	**Non-Coincident...**	56.3 A
Electric Water Heating	2500 VA	125.00%	3125 VA	**Total Est. Demand - NC**	307.4 A
Electric Heat	47413 VA	125.00%	59266 VA		
Elevator	15500 VA	100.00%	15500 VA		
Cooling	20270 VA	100.00%	20270 VA		

Notes:
Provide with integral surge protection device per specifications.

Designation: P1

Installed Location: Leasing Office 102
Voltage: 208Y/120 3PH 4W-3Ph-4W
Mounting: Surface
Enclosure: NEMA 1

Bus Amps: 225
MCB Amps: MLO
Features & Modifications: -

SCCR/AIC: 22.0 kA
Mains FN/Note: -

Ckt	Description	Circuitry	Trip (A)	FN	A	B	C	FN	Trip (A)	Circuitry	Description	Ckt
P1:1	LTG - Community 101, Fitness 104, Hall 106	1/2"C,1#12,#12N,#12G	20		13...	72...			20	1/2"C,1#12,#12N,#12G	RCPT - Community Room and Hall	P1:2
P1:3	LTG - Hall 107	1/2"C,1#12,#12N,#12G	20			27...	36...		20	1/2"C,1#12,#12N,#12G	RCPT - Community Room 101 Island	P1:4
P1:5	LTG - Hall 108	1/2"C,1#12,#12N,#12G	20				39...	54...	20	1/2"C,1#12,#12N,#12G	RCPT - Community Room Bar	P1:6
P1:7	LTG - Exterior Canopy and Trellis	1/2"C,1#12,#12N,#12G	20		14...	80...			20	1/2"C,1#12,#12N,#12G	RCPT - Community Room Refrigerator	P1:8
P1:9	LTG - Parking Lot	3/4"C,2#8,#8G	20				13...	90...	20	1/2"C,1#12,#12N,#12G	RCPT - Office 102	P1:10
P1:11								13...	72...	20	1/2"C,1#12,#12N,#12G	RCPT - TLT 103, Hall 107	P1:12
P1:13	LTG - Monument Sign	3/4"C,1#10,#10N,#10G	20		22...	36...			20	1/2"C,1#12,#12N,#12G	RCPT - Hall 108	P1:14
P1:15	LTG - Elevator Pit	1/2"C,1#12,#12N,#12G	20			24...	18...		20	1/2"C,1#8,#8N,#8G	Electric Wall Heater 'EWH-1' - Hall 108	P1:16
P1:17	RCPT - Elevator Pit	1/2"C,1#12,#12N,#12G	20				18...	21...	30	1/2"C,2#8,#8G	Electric Wall Heater 'EWH-4' - Mech 109	P1:18
P1:19	RCPT - S. Fitness Equipment	1/2"C,1#12,#12N,#12G	20		10...	21...						P1:20
P1:21	RCPT - S. Fitness Equipment	1/2"C,1#12,#12N,#12G	20			10...						P1:22
P1:23	RCPT - S. Fitness Equipment	1/2"C,1#12,#12N,#12G	20				10...					P1:24
P1:25	RCPT - S. Fitness Equipment	1/2"C,1#12,#12N,#12G	20		10...	11...			20	1/2"C,1#12,#12N,#12G	Hot Water Recirculation Pump 'HWP'	P1:26
P1:27	RCPT - S. Fitness Equipment	1/2"C,1#12,#12N,#12G	20			10...	20...		30	1/2"C,2#10,#10G	Blower Coil 'BC-1' - First Floor Halls	P1:28
P1:29	RCPT - S. Fitness	1/2"C,1#12,#12N,#12G	20				36...	20...				P1:30
P1:31	RCPT - N. Fitness	1/2"C,1#12,#12N,#12G	20		54...	20...			30	1/2"C,2#10,#10G	Blower Coil 'BC-1' - Stairs 1	P1:32
P1:33	Electric Water Cooler - Fitness	1/2"C,1#12,#12N,#12G	20			80...	20...					P1:34
P1:35	Blower Coil 'BC-2' - Fitness	1/2"C,2#8,#10G	40				31...	12...	20	1/2"C,1#10,#10N,#10G	Exterior Receptacles	P1:36
P1:37					31...	72...			20	1/2"C,1#12,#12N,#12G	Mech/Stroage Receptacals	P1:38
P1:39	Blower Coil 'BC-1' - Stairs 2	1/2"C,2#8,#8G	30			20...	36...		L 20	1/2"C,1#12,#12N,#12G	Fire Sprinkler Switch Systems	P1:40
P1:41								20...	0 VA	20	--	Spare	P1:42
P1:43	FACP	1/2"C,1#12,#12N,#12G	20	L	36...	0 VA			20	--	Spare	P1:44
P1:45	Exterior Lighting Inverter	1/2"C,1#12,#12N,#12G	20			55...	0 VA		20	--	Spare	P1:46
P1:47	Door Access Control	1/2"C,1#12,#12N,#12G	20				36...	--	--	--	Space	P1:48
P1:49	Electric Water Heating	1/2"C,1#10,#10N,#10G	30		25...	--			--	--	Space	P1:50
P1:51	Space	--	--			--	--		--	--	Space	P1:52
P1:53	Space	--	--				--	--	--	--	Space	P1:54
				Connected Load:	17255 VA	14233 VA	15685 VA					
				Connected Amps:	145.7 A	118.6 A	132.6 A					

Breaker Function Schedule

A	Arc-Fault Interrupter (AFCI) Protection
AG	Combination Arc and Ground Fault Circuit Interrupter Protection
G	Ground-Fault Circuit Interrupter (GFCI) Protection (5 mA)
L	Provide breaker with lock-on clip

LST Consulting Engineers, PA
Manhattan, Kansas
785.587.8042

Wichita, Kansas
316.285.0696

www.LSTengineers.com
mail@LSTengineers.com
Project 24061

JonesGillamRenz
730 N. Ninth
Salina, KS 67401
785.827.0386
1881 Main Street, Suite 301
Kansas City, MO 64108
jgr@jgrarchitects.com

THE RESIDENCE AT HERATIGE WEST
NEW SENIOR LIVING FACILITY
ANDOVER, KANSAS

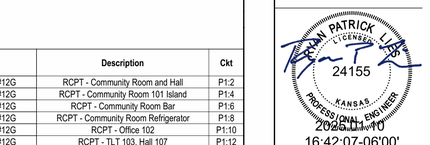

REVISIONS:

DATE: 01-10-2025
JOB: 24-3379
SHEET NO.:

E6.3

COPYRIGHTED ©

Wichita-Sedgwick County
Metropolitan Area Building
and Construction Department

REVIEWED FOR CODE COMPLIANCE

CORRECTIONS OR COMMENTS MADE ON THESE DRAWINGS AND THIS DOCUMENT DURING THIS REVIEW DO NOT RELIEVE CONTRACTOR FROM COMPLIANCE WITH ALL REQUIREMENTS OF THE CODE OF THE MABCD, THE CITY OF WICHITA OR SEDGWICK COUNTY. THIS REVIEW IS ONLY FOR GENERAL CONFORMANCE OF THE CODE. THE CONTRACTOR IS RESPONSIBLE FOR CONFORMING AND CORRELATING ALL TECHNIQUES OF CONSTRUCTION. THIS APPROVAL IS SUBJECT TO PROVISIONS OF SECTION 107.4 OF THE 2012 INTERNATIONAL BUILDING CODE.

DATE: 02/19/25 BY: William Jerauld Jr

General Plan Symbols

Symbol	Description
△	Plan Revision Number
- / ---	Detail Number on Sheet; Sheet Number Where Detail is Placed
(#)	Keynote Symbol
	Continuation Symbol
	Point Where New Connects To Existing
Room 1	Room Name / Number
	Area Being Demolished
	Area Not In Contract
	Electrical Equipment. Do not route HVAC installation above or below equipment. Maintain working clearance as indicated by dashed line.

HVAC Symbols

Symbol	Description
24"/12"	Sq. Duct Size (Width/Height)
24"x12"FO	Oval Duct Size (Width x Height)
18"Ø	Round Duct Size (Diameter)
(E)	Existing Duct To Remain
	Duct To Be Demolished
S/A	Supply Air
V/A	Ventilation Air
O/A	Outdoor Air
R/A	Return Air
T/A	Transfer Air
E/A	General Exhaust Air
KED	Kitchen Exhaust Duct
FLUE	Flue Gas Vent
C/A	Combustion Air
	Rect. Supply Duct Rise / Drop
	Round Supply Duct Rise / Drop
	Rect. Return Duct Rise / Drop
	Round Return Duct Rise / Drop
	Rect. Exhaust Duct Rise / Drop
	Round Exhaust Duct Rise / Drop

Grille, Register, Diffusers

- Square Ceiling Diffuser: CD- | 500 | 10"Ø/24x24 — Type (See Schedule); Airflow; Neck Size / Module Size
- Round Ceiling Diffuser: CD11 | 100 | 6"Ø | TYP. X 4 — Type (See Schedule); Airflow; Neck Size; Type Count for Space
- Sidewall Supply Grille: SG5 | 300 | 18"/6" | AFF:0" — Type (See Schedule); Airflow; Nominal Duct Size; Mounting Elevation (Centerline)
- Linear Diffuser: SD- | 200 | 8"Ø/2s/4'-0"L — Type (See Schedule); Airflow; Neck Size/ Slot(s)/ Active Length
- Sidewall Return Grille: RG6 | 200 | 12"/6"/--- | AFF:0" — Type (See Schedule); Airflow; Nominal Duct Size; Mounting Elevation (Centerline)
- Ceiling Return: CR2 | 200 | 8"Ø/24x24 — Type (See Schedule); Airflow; Neck Size / Module Size

Mechanical Equipment

- RTU-1 — Unit Identity
- (E)AHU-2 — Existing to Remain Equipment
- (R)AHU-3 — Existing Relocated Equipment
- Equipment By Others (Refer To Other Disciplines)

Mechanical Control Devices

- (T) Thermostat
- (H) Humidistat
- (TS) Temperature Sensor
- (HS) Humidity Sensor
- CO2 Carbon Dioxide Detector
- HZG Hazardous Gas Detector

Damper Types

- (B) Manual Damper
- (M) Motorized Damper
- Backdraft Damper
- (S) Smoke Damper
- Fire Damper
- Comb. Fire/ Smoke Damper

Abbreviations

Ø	ROUND	LVR	LOUVER
ABV	ABOVE	LWT	LEAVING WATER TEMPERATURE
AC	AIR CONDITIONING	M/A	MIXED AIR
AD	AREA DRAIN	MAX	MAXIMUM
ADD	ADDENDUM	MBH	ONE THOUSAND BTU PER HOUR
AFF	ABOVE FINISHED FLOOR	MCF	ONE THOUSAND CUBIC FEET
AFUE	ANNUAL FUEL UTILIZATION EFFICIENCY	MD	MOTORIZED DAMPER
ALT	ALTERNATE	MECH	MECHANICAL
AP	ACCESS PANEL	MFR	MANUFACTURER
ARCH	ARCHITECT/ARCHITECTURAL	MIN	MINIMUM
BFF	BELOW FINISHED FLOOR	MISC	MISCELLANEOUS
BLW	BELOW	MTR	MOTOR
BTU	BRITISH THERMAL UNITS	MU/A	MAKE-UP/AIR
BTUH	BRITISH THERMAL UNITS PER HOUR	NC	NOISE CRITERIA
CAP	CAPACITY	NC	NORMALLY CLOSED
CB	CATCH BASIN	NIC	NOT IN CONTRACT
CFM	CUBIC FEET PER MINUTE	NO	NUMBER
CLG	CEILING	NO	NORMALLY OPEN
CO	CLEAN OUT	NTS	NOT TO SCALE
CW	COLD WATER	O	OXYGEN
D	DEGREE	O/A	OUTSIDE AIR
DB	DRY BULB	ORD	OVERFLOW ROOF DRAIN
DIA	DIAMETER	PD	PRESSURE DROP
DN	DOWN	PIV	POST INDICATOR VALVE
DW	DISTILLED WATER	PLBG	PLUMBING
EA	EACH	PRESS	PRESSURE
EAT	ENTERING AIR TEMPERATURE	PRV	PRESSURE REDUCING VALVE
ELEC	ELECTRICAL	PSI	POUNDS PER SQUARE INCH
EQUIP	EQUIPMENT	PSIG	POUNDS PER SQUARE INCH GAUGE
EWC	ELECTRIC WATER COOLER	PWR	POWER
EWT	ENTERING WATER TEMPERATURE	R	DUCT RISER
E/A	EXHAUST AIR	R/A	RETURN AIR
EXIST	EXISTING	RCP	RADIANT CEILING PANEL
F	DEGREES FAHRENHEIT	RD	ROOF DRAIN
FCO	FLOOR CLEAN OUT	REC	RECESSED
FD	FLOOR DRAIN	RED	REDUCER
FDC	FIRE DEPARTMENT CONNECTION	RH	RELATIVE HUMIDITY
FL	FLOOR	RL/A	RELIEF AIR
FO	FUEL OIL	RM	ROOM
FOV	FUEL OIL VENT	RPM	REVOLUTIONS PER MINUTE
FOR	FUEL OIL RETURN	RW	RAIN WATER
FOS	FUEL OIL SUPPLY	SF	SQUARE FOOT
FPM	FEET PER MINUTE	S/A	SUPPLY AIR
FS	FLOOR SINK	SAN	SANITARY
FT	FOOT/FEET	SF	SQUARE FOOT
FTR	FIN TUBE RADIATION	SD	SMOKE DAMPER
GAL	GALLON	SM	SURFACE MOUNT
GF	GAS-FIRED	SP	STANDPIPE
GC	GENERAL CONTRACTOR	SP	STATIC PRESSURE
GPM	GALLONS PER MINUTE	STM	STEAM
GW	GREASE WASTE	T	THERMOSTAT
HB	HOSE BIB	TD	TEMPERATURE DROP
HP	HORSE POWER	TDR	TRENCH DRAIN
HTG	HEATING	TEMP	TEMPERATURE
HTR	HEATER	TYP	TYPICAL
HW	HOT WATER	UG	UNDERGROUND
HYD	HYDRANT	VAC	VACUUM
ID	INDIRECT	V	VENT
IN	INCH	VAV	VARIABLE AIR VOLUME
INV	INVERT	VENT	VENTILATION
LB	POUND	VTR	VENT THROUGH ROOF
LB/HR	POUNDS PER HOUR	W	WASTE
LAT	LEAVING AIR TEMPERATURE	WB	WET BULB
LP	LOW PRESSURE	WCO	WALL CLEAN OUT
LPG	LIQUEFIED PETROLEUM GAS	WH	WALL HYDRANT

Equipment Abbreviations

AC	AIR CONDITIONING UNIT	ET	EXPANSION TANK
ACCU	AIR COOLING CONDENSING UNIT	EWH	ELECTRIC WATER HEATER
AHU	AIR HANDLING UNIT	FCU	FAN COIL UNIT
AS	AIR SEPARATOR	FP	FIRE PUMP
B	BOILER	GI	GREASE INTERCEPTOR
CH	CHILLER	GRV	GRAVITY ROOF VENTILATOR
CT	COOLING TOWER	HWP	HEATING WATER PUMP
CUH	CABINET UNIT HEATER	HRU	HEAT RECOVERY UNIT
CHWP	CHILLED WATER PUMP	PRV	POWER ROOF VENTILATOR
DBP	DOMESTIC WATER BOOSTER PUMP	RE	RETURN/EXHAUST FAN
DC	DUCT MOUNTED COIL	RTU	ROOFTOP UNIT
DCP	DOMESTIC WATER CIRCULATING PUMP	SP	SUMP PUMP
EF	EXHAUST FAN	UH	UNIT HEATER
EDC	ELECTRIC DUCT COIL	WH	WATER HEATER

* NOTE *
ALL OF GENERAL NOTES ON THIS SHEET ARE TO BE APPLIED TO ALL OTHER DRAWINGS IN THIS SET.THE SYMBOLS AND ABBREVIATIONS SHOWN ON THIS SHEET MAY OR MAY NOT BE USED IN THIS SET OF DRAWINGS.

HVAC SHEET INDEX

M1.1	HVAC PLANS
M1.2	HVAC PLANS
M4.1	ENLARGED HVAC PLANS
M4.2	ENLARGED HVAC PLANS
M6.1	HVAC SCHEDULES AND DETAILS
M0.1	HVAC TITLE SHEET

GENERAL HVAC NOTES

A. CONTRACTOR SHALL LOCATE THERMOSTATS AND HUMIDISTATS AT 4'-0" AFF UNLESS NOTED OTHERWISE. MAINTAIN A MINIMUM HORIZONTAL SEPARATION OF 8" FROM LIGHT SWITCHES.
B. CONDENSATE DRAINS SHALL BE SUPPLIED FOR ALL COOLING EQUIPMENT. CONTRACTOR SHALL ENSURE PROPER INSTALLATION AND DRAINAGE AS REQUIRED BY FEDERAL, STATE, AND LOCAL CODES. CONDENSATE PIPING SHALL BE TYPE "L" COPPER. WHERE INSTALLED ABOVE CEILINGS, CONDENSATE DRAIN PIPING SHALL BE INSULATED WITH MINIMUM 1/2" FIBERGLASS PIPE INSULATION WITH ALL SERVICE JACKET.
C. ALL SUPPLY, RETURN, AND EXHAUST DUCTWORK SHALL BE RATED FOR PRESSURE CLASS OF 2" W.G. UNLESS NOTED OTHERWISE.
D. COORDINATE THE EXACT LOCATION OF ALL CEILING DIFFUSERS, REGISTERS, AND GRILLES WITH LIGHTING.
E. PROVIDE DIFFUSERS AND REGISTERS WITH 4-WAY BLOW PATTERN UNLESS OTHERWISE NOTED.
F. HVAC EQUIPMENT SHALL NOT BE UTILIZED UNTIL ALL DUCT PRODUCING CONSTRUCTION ACTIVITY HAS BEEN COMPLETED. CONTRACTOR SHALL BE REQUIRED TO OBTAIN APPROVAL FROM OWNER PRIOR TO EQUIPMENT STARTUP, AND TO REPLACE FILTERS ON HVAC EQUIPMENT UPON FINAL COMPLETION.
G. LOCATIONS OF PIPING, DUCTWORK AND EQUIPMENT AS INDICATED ON THE DRAWINGS ARE APPROXIMATE AND SUBJECT TO MINOR ADJUSTMENTS IN THE FIELD. WORK SHALL BE COORDINATED WITH ALL OTHER TRADES TO AVOID INTERFERENCE IN THE FIELD.
H. FINAL PRODUCT SHALL BE A COMPLETE AND FUNCTIONING SYSTEM, AND SHALL CONFORM TO ALL REQUIREMENTS OF APPLICABLE FEDERAL, STATE, AND LOCAL CODES, INCLUDING BUT NOT LIMITED TO THE INTERNATIONAL BUILDING CODE AND INTERNATIONAL MECHANICAL CODE.
I. LOCATE EQUIPMENT REQUIRING ACCESS 2'-0" MAXIMUM ABOVE CEILING.
J. ALL ROOF MOUNTED EQUIPMENT SHALL BE A MINIMUM 10'-0" FROM EDGE OF ROOFS WITHOUT A 42" HIGH PARAPET OR GUARD RAIL. WHERE PROVIDING 10'-0" SEPARATION FROM ROOF EDGE IS NOT POSSIBLE, PROVIDE PERMANENT FALL ARREST ANCHORS COMPLIANT WITH ANSI/ASSP Z359.1. COORDINATE WITH GENERAL CONTRACTOR.
K. LOCATE DUCTWORK, PIPING AND MECHANICAL EQUIPMENT OUTSIDE OF THE NEC REQUIRED CLEAR SPACE ABOVE AND AROUND ELECTRICAL PANELS, TRANSFORMERS AND OTHER ELECTRICAL EQUIPMENT. COORDINATE WITH ELECTRICAL CONTRACTOR.
L. PENETRATIONS OF RATED ASSEMBLIES SHALL BE FIRE STOPPED. FIRE STOPPING SHALL BE U.L. LISTED. SEE ARCHITECTURAL DRAWINGS FOR LOCATIONS OF RATED ASSEMBLIES.
M. PROVIDE SLEEVES AND/OR OPENINGS TO RUN PIPES AND DUCTS THROUGH FOUNDATIONS, FLOORS, WALLS, AND ROOF.
N. MAINTAIN CLEAR ACCESS TO SERVICE EQUIPMENT AND OTHER ACCESSORIES REQUIRING SERVICE, VISUAL INSPECTION OR HAND OPERATION. WHERE INDICATED OR REQUIRED, PROVIDE ACCESS PANELS OF THE TYPE SELECTED TO SUIT MATERIALS IN WHICH INSTALLED.
O. TRANSITION FROM PIPING AND DUCTWORK SIZES SHOWN TO PROPERLY CONNECT TO MECHANICAL EQUIPMENT.
P. PIPE SIZES SHOWN SHALL BE CONTINUED IN THE DIRECTION OF FLOW UNTIL ANOTHER SIZE IS SHOWN.
Q. INSTALL ALL EQUIPMENT IN ACCORDANCE WITH THE RESPECTIVE MANUFACTURER'S WRITTEN INSTALLATION INSTRUCTIONS, AT A LEVEL OF QUALITY AND WORKMANSHIP CONSISTENT WITH THE SPECIFICATIONS.
R. INSTALL EXPOSED PIPING AND DUCTWORK AS HIGH AS PRACTICAL IN ROOMS WITHOUT CEILINGS.
S. PRIOR TO STARTING WORK, SUBMIT SHOP DRAWINGS FOR ALL MECHANICAL EQUIPMENT AND MATERIALS. SUBSTITUTE EQUIPMENT INSTALLED WITHOUT PRIOR APPROVAL SHALL BE SUBJECT TO REPLACEMENT AT CONTRACTOR'S EXPENSE.
T. CONTRACTOR SHALL OBTAIN AND PAY FOR ALL NECESSARY PERMITS AND SHALL ARRANGE FOR ALL INSPECTIONS AS REQUIRED.
U. PROVIDE ONE YEAR WARRANTY FOR ALL WORKMANSHIP AND MATERIALS AFTER THE DATE OF FINAL ACCEPTANCE.

LST Consulting Engineers, PA
Manhattan, Kansas
785.587.8042
Wichita, Kansas
316.285.0696
www.LSTengineers.com
mail@LSTengineers.com
Project 24061

JGR JonesGillamRenz
730 N. Ninth
Salina, KS 67401
785.827.0386
1881 Main Street, Suite 301
Kansas City, MO 64108
jgr@jgrarchitects.com

THE RESIDENCE AT HERATIGE WEST
NEW SENIOR LIVING FACILITY
ANDOVER, KANSAS

RYAN PATRICK LIES
LICENSED
24155
KANSAS
PROFESSIONAL ENGINEER
2025.01.10
16:42:22-06'00'

REVISIONS:

DATE: 01-10-2025
JOB: 24-3379
SHEET NO.:

M0.1

COPYRIGHTED ©

PROJECT SHALL COMPLY WITH ALL REQUIREMENTS OF THE 2018 IECC. REFERENCE SPECIFICATIONS FOR COMMISSIONING REQUIREMENTS

Wichita-Sedgwick County
Metropolitan Area Building
and Construction Department

REVIEWED FOR CODE COMPLIANCE

CORRECTIONS OR COMMENTS MADE ON THESE DRAWINGS AND THIS DOCUMENT DURING THIS REVIEW DO NOT RELIEVE CONTRACTOR FROM COMPLIANCE WITH ALL REQUIREMENTS OF THE CODE OF THE MABCD, THE CITY OF WICHITA OR SEDGWICK COUNTY. THIS REVIEW IS ONLY FOR GENERAL CONFORMANCE OF THE CODE. THE CONTRACTOR IS RESPONSIBLE FOR CONFORMING AND CORRELATING ALL TECHNIQUES OF CONSTRUCTION. THIS APPROVAL IS SUBJECT TO PROVISIONS OF SECTION 107.4 OF THE 2012 INTERNATIONAL BUILDING CODE.

DATE: 02/19/25 BY: William Jerauld Jr

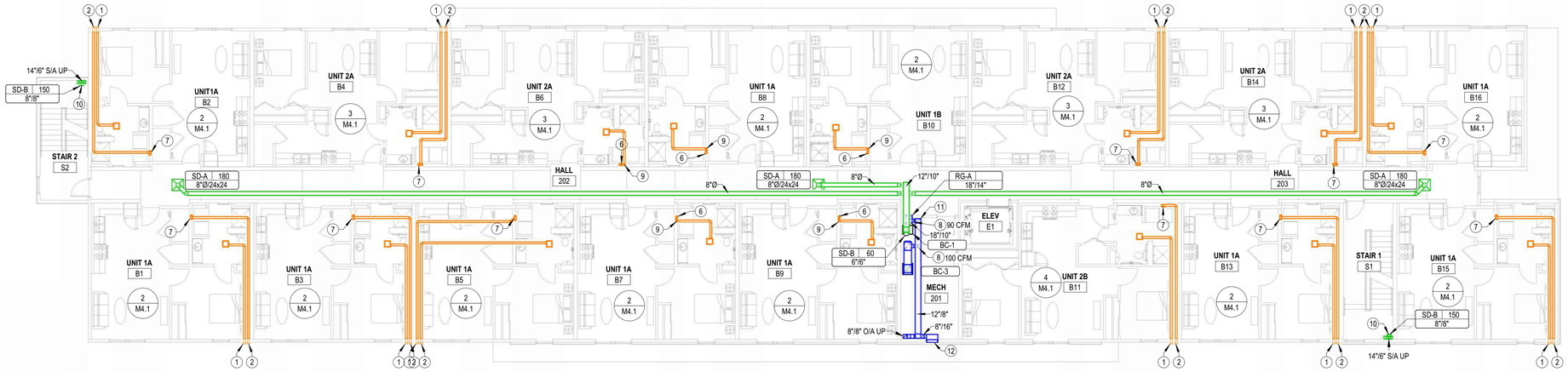

2 M1.1 SECOND FLOOR HVAC PLAN
3/32" = 1'-0"
0 8' 16' 24'

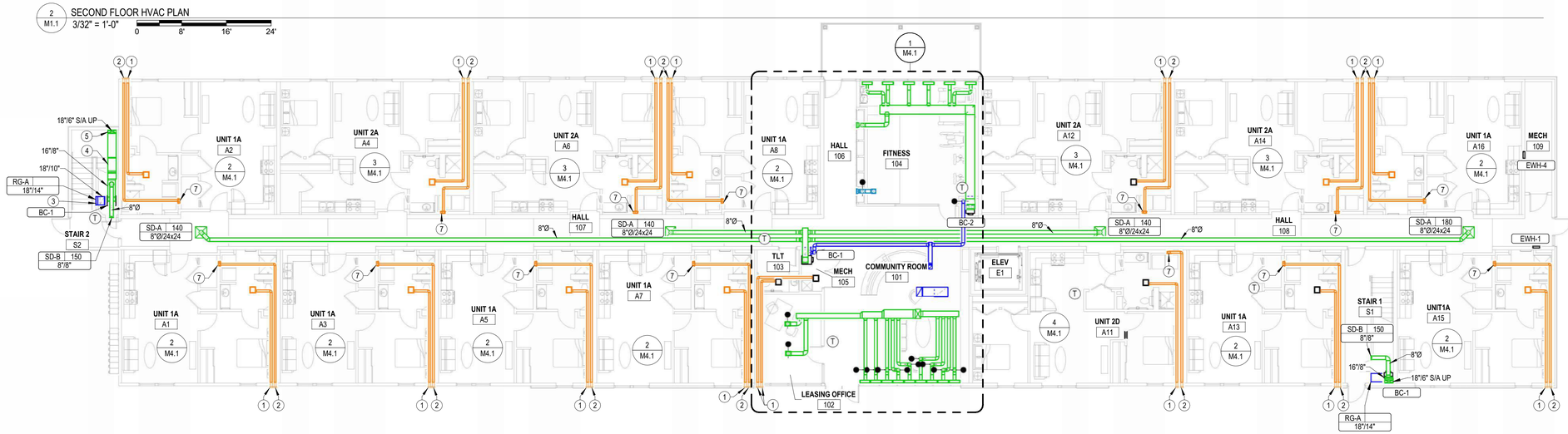

1 M1.1 FIRST FLOOR HVAC PLAN
3/32" = 1'-0"
0 8' 16' 24'

NOTES BY SYMBOL

1. ROUTE 4"Ø EXHAUST DUCT TO MANUFACTURER'S WALL CAP WITH BACKDRAFT DAMPER AND BIRD SCREEN, COORDINATE FINAL LOCATION WITH ARCHITECT.
2. 4"Ø DRYER DUCT. SEE ENLARGED PLANS FOR MORE INFORMATION. COORDINATE FINAL LOCATION OF WALL CAP WITH ARCHITECT.
3. MOUNT RETURN GRILLE HIGH IN WALL, TRANSITION DOWN TO CONNECT TO BOTTOM OF BLOWER COIL.
4. TRANSITION DUCT DOWN AS REQUIRED TO ROUTE BELOW STAIR LANDING.
5. ROUTE DUCT UP THROUGH STAIR LANDING IN CHASE, COORDINATE WITH ARCHITECT.
6. PROVIDE UL LISTED DRYER BOX EQUAL TO IN-O-VATE TECHNOLOGIES IN WALL INSTALLED IN ACCORDANCE WITH MANUFACTURER'S RECOMMENDATIONS, AND ROUTE 4"Ø DRYER EXHAUST DUCT TO ROOF JACK WITH BACKDRAFT DAMPER. SEE OVERALL MECHANICAL PLANS FOR UNIT SPECIFIC ROUTING. MAXIMUM ALLOWABLE EQUIVALENT DUCT LENGTH = 35'. UTILIZE LONG RADIUS SMOOTH ELBOWS WHERE REQUIRED. MAXIMUM EQUIVALENT DUCT LENGTH MAY BE INCREASED WHERE DRYER MANUFACTURER'S INSTALLATION INSTRUCTIONS ALLOW, AND DOCUMENTATION IS PROVIDED TO CODE OFFICIAL PRIOR TO CONCEALMENT INSPECTION. COORDINATE EXACT REQUIREMENTS WITH EQUIPMENT PROVIDED. PROVIDE PERMANENT LABEL IDENTIFYING EQUIVALENT LENGTH OF DRYER DUCT INSTALLED PER IMC 504.

   NOTE: ANNULAR SPACE AROUND DUCT IS TO BE SEALED AT ALL PENETRATIONS OF FLOORS AND CEILINGS WITH U.L. LISTED FIRE STOPPING SYSTEM.
7. PROVIDE UL LISTED DRYER BOX EQUAL TO IN-O-VATE TECHNOLOGIES IN WALL INSTALLED IN ACCORDANCE WITH MANUFACTURER'S RECOMMENDATIONS, AND ROUTE 4"Ø DRYER EXHAUST DUCT TO WALL CAP WITH BACKDRAFT DAMPER. SEE OVERALL MECHANICAL PLANS FOR UNIT SPECIFIC ROUTING. MAXIMUM ALLOWABLE EQUIVALENT DUCT LENGTH = 35'. UTILIZE LONG RADIUS SMOOTH ELBOWS WHERE REQUIRED. MAXIMUM EQUIVALENT DUCT LENGTH MAY BE INCREASED WHERE DRYER MANUFACTURER'S INSTALLATION INSTRUCTIONS ALLOW, AND DOCUMENTATION IS PROVIDED TO CODE OFFICIAL PRIOR TO CONCEALMENT INSPECTION. COORDINATE EXACT REQUIREMENTS WITH EQUIPMENT PROVIDED. PROVIDE PERMANENT LABEL IDENTIFYING EQUIVALENT LENGTH OF DRYER DUCT INSTALLED PER IMC 504.

   NOTE: ANNULAR SPACE AROUND DUCT IS TO BE SEALED AT ALL PENETRATIONS OF FLOORS AND CEILINGS WITH U.L. LISTED FIRE STOPPING SYSTEM.
8. PROVIDE BALANCING DAMPER AND CONNECT OUTDOOR AIR DUCT TO RETURN DUCTWORK AT BLOWER COIL AND BALANCE TO AIRFLOW LISTED ON PLANS.
9. ROUTE 4" EXHAUST UP IN WALL TO ROOF. DUCTS SHALL BE RUN IN WALLS CONTINUOUS FROM EXHAUST FAN TO EXTERIOR OF BUILDING WITHOUT BEING COMBINED. COORDINATE EXACT ROUTING AND WALL LOCATIONS WITH G.C.
10. MOUNT SUPPLY DIFFUSER 7'-0" ABOVE LANDING.
11. TRANSITION OUTDOOR AIR DUCT TO 8"x8" AFTER 'BC-1' TAP. ROUTE DUCT DOWN TO ABOVE FIRST FLOOR CEILING, SEE 1:M4.1 FOR CONTINUATION.
12. PROVIDE 24"x18" OUTDOOR AIR WALL LOUVER EQUAL TO GREENHECK ESJ-602 WITH BIRD SCREEN AND BACKDRAFT DAMPER. PROVIDE FULL SIZE CONNECTION AND TRANSITION TO DUCT AS SHOWN ON PLANS. INSTALL TOP OF LOUVER INLINE WITH ADJACENT WINDOWS. COORDINATE LOUVER FINISH WITH ARCHITECT.

LST Consulting Engineers, PA
Manhattan, Kansas
785.587.8042

Wichita, Kansas
316.285.0696

www.LSTengineers.com
mail@LSTengineers.com

Project 24061

JonesGillamRenz
730 N. Ninth 1881 Main Street, Suite 301
Salina, KS 67401 Kansas City, MO 64108
785.827.0386 jgr@jgrarchitects.com

THE RESIDENCE AT HERATIGE WEST

NEW SENIOR LIVING FACILITY

ANDOVER, KANSAS

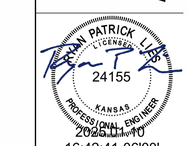

REVISIONS:

DATE: 01-10-2025
JOB: 24-3379
SHEET NO.:

M1.1

© COPYRIGHTED

PROJECT SHALL COMPLY WITH ALL REQUIREMENTS OF THE 2018 IECC. REFERENCE SPECIFICATIONS FOR COMMISSIONING REQUIREMENTS

Wichita-Sedgwick County
Metropolitan Area Building
and Construction Department

REVIEWED FOR CODE COMPLIANCE

CORRECTIONS OR COMMENTS MADE ON THESE DRAWINGS AND THIS DOCUMENT DURING THIS REVIEW DO NOT RELIEVE CONTRACTOR FROM COMPLIANCE WITH ALL REQUIREMENTS OF THE CODE OF THE MABCD, THE CITY OF WICHITA OR SEDGWICK COUNTY. THIS REVIEW IS ONLY FOR GENERAL CONFORMANCE OF THE CODE. THE CONTRACTOR IS RESPONSIBLE FOR CONFORMING AND CORRELATING ALL TECHNIQUES OF CONSTRUCTION. THIS APPROVAL IS SUBJECT TO PROVISIONS OF SECTION 107.4 OF THE 2012 INTERNATIONAL BUILDING CODE.

DATE: 02/19/25 BY: William Jerauld Jr

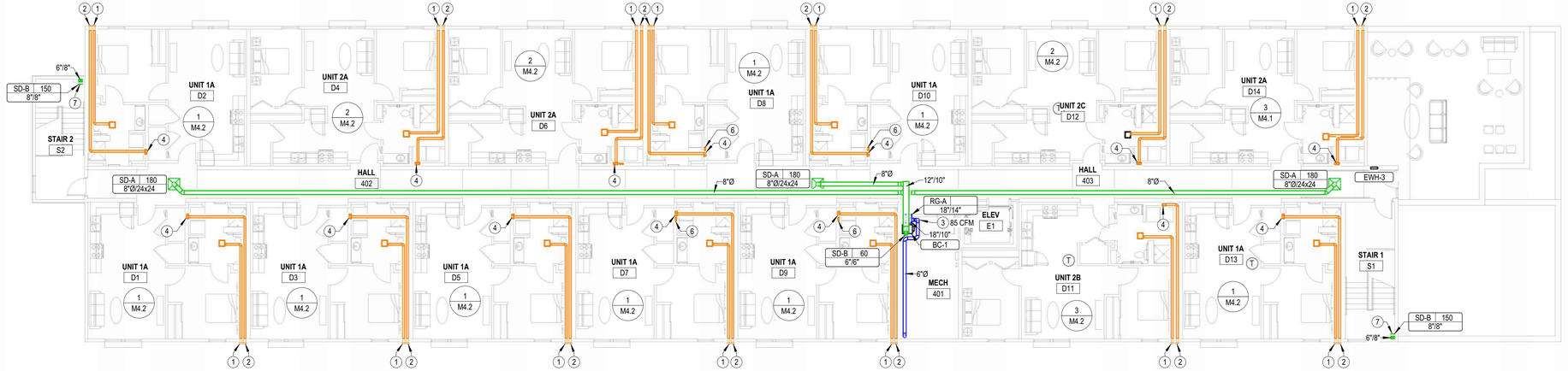

2 M1.2 FOURTH FLOOR HVAC PLAN
3/32" = 1'-0"
0 8' 16' 24'

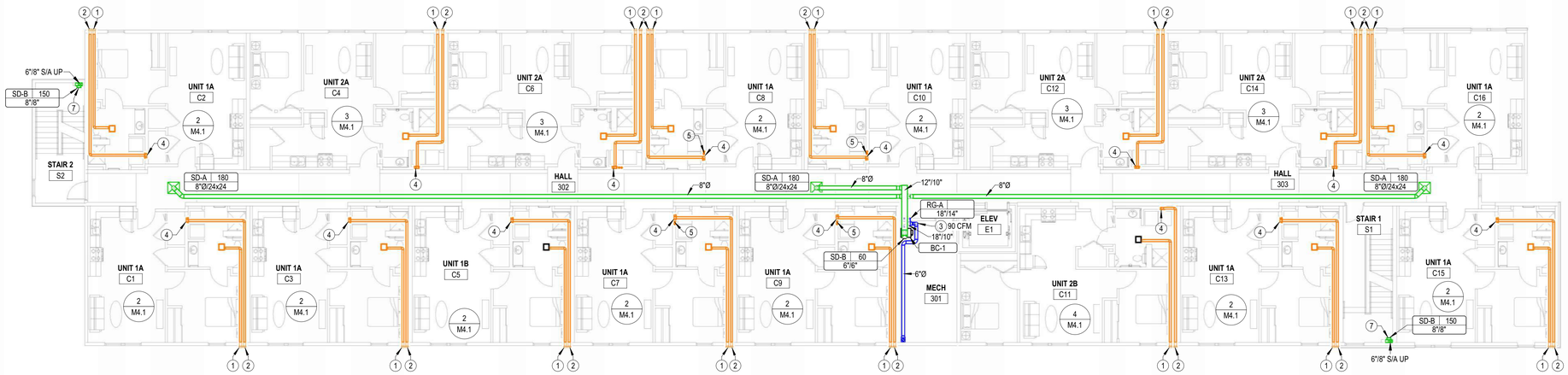

1 M1.2 THIRD FLOOR HVAC PLAN
3/32" = 1'-0"
0 8' 16' 24'

NOTES BY SYMBOL

1. ROUTE 4"Ø EXHAUST DUCT TO MANUFACTURER'S WALL CAP WITH BACKDRAFT DAMPER AND BIRD SCREEN, COORDINATE FINAL LOCATION WITH ARCHITECT.
2. 4"Ø DRYER DUCT. SEE ENLARGED PLANS FOR MORE INFORMATION. COORDINATE FINAL LOCATION OF WALL CAP WITH ARCHITECT.
3. PROVIDE BALANCING DAMPER AND CONNECT OUTDOOR AIR DUCT TO RETURN DUCTWORK AT BLOWER COIL AND BALANCE TO AIRFLOW LISTED ON PLANS.
4. PROVIDE UL LISTED DRYER BOX EQUAL TO IN-O-VATE TECHNOLOGIES IN WALL INSTALLED IN ACCORDANCE WITH MANUFACTURER'S RECOMMENDATIONS, AND ROUTE 4"Ø DRYER EXHAUST DUCT TO WALL CAP WITH BACKDRAFT DAMPER. SEE OVERALL MECHANICAL PLANS FOR UNIT SPECIFIC ROUTING. MAXIMUM ALLOWABLE EQUIVALENT DUCT LENGTH = 35'. UTILIZE LONG RADIUS SMOOTH ELBOWS WHERE REQUIRED. MAXIMUM EQUIVALENT DUCT LENGTH MAY BE INCREASED WHERE DRYER MANUFACTURER'S INSTALLATION INSTRUCTIONS ALLOW, AND DOCUMENTATION IS PROVIDED TO CODE OFFICIAL PRIOR TO CONCEALMENT INSPECTION. COORDINATE EXACT REQUIREMENTS WITH EQUIPMENT PROVIDED. PROVIDE PERMANENT LABEL IDENTIFYING EQUIVALENT LENGTH OF DRYER DUCT INSTALLED PER IMC 504.

   NOTE: ANNULAR SPACE AROUND DUCT IS TO BE SEALED AT ALL PENETRATIONS OF FLOORS AND CEILINGS WITH U.L. LISTED FIRE STOPPING SYSTEM.
5. EXHAUST DUCT UP FROM SECOND FLOOR TO ROOF. SEE 2/M1.2 FOR CONTINUATION.
6. SEE M/E1.2 FOR CONTINUATION.
7. MOUNT SUPPLY DIFFUSER 7'-0" ABOVE LANDING.

LST Consulting Engineers, PA
Manhattan, Kansas
785.587.8042

Wichita, Kansas
316.285.0696

www.LSTengineers.com
mail@LSTengineers.com
Project 24061

JonesGillamRenz
730 N. Ninth 1881 Main Street, Suite 301
Salina, KS 67401 Kansas City, MO 64108
785.827.0386 jgr@jgrarchitects.com

THE RESIDENCE AT HERATIGE WEST

NEW SENIOR LIVING FACILITY

ANDOVER, KANSAS

RYAN PATRICK LIPP LICENSED 24155 KANSAS PROFESSIONAL ENGINEER
2025.01.10 16:42:58-06'00'

REVISIONS:

DATE: 01-10-2025
JOB: 24-3379
SHEET NO.:

M1.2

COPYRIGHTED ©

PROJECT SHALL COMPLY WITH ALL REQUIREMENTS OF THE 2018 IECC. REFERENCE SPECIFICATIONS FOR COMMISSIONING REQUIREMENTS

Wichita-Sedgwick County
Metropolitan Area Building
and Construction Department

REVIEWED FOR CODE COMPLIANCE

CORRECTIONS OR COMMENTS MADE ON THESE DRAWINGS AND THIS DOCUMENT DURING THIS REVIEW DO NOT RELIEVE CONTRACTOR FROM COMPLIANCE WITH ALL REQUIREMENTS OF THE CODE OF THE MABCD, THE CITY OF WICHITA OR SEDGWICK COUNTY. THIS REVIEW IS ONLY FOR GENERAL CONFORMANCE OF THE CODE. THE CONTRACTOR IS RESPONSIBLE FOR CONFORMING AND CORRELATING ALL TECHNIQUES OF CONSTRUCTION. THIS APPROVAL IS SUBJECT TO PROVISIONS OF SECTION 107.4 OF THE 2012 INTERNATIONAL BUILDING CODE.

DATE: 02/19/25 BY: William Jerauld Jr

NOTES BY SYMBOL

1	ROUTE REFRIGERANT PIPING FROM BLOWER COIL TO HEAT PUMP. CONCEAL PIPING IN WALLS AND ABOVE CEILINGS. SEE ME1.2 FOR HEAT PUMP LOCATIONS.
2	SEE M1.1 AND M1.2 FOR DRYER EXHAUST DUCT ROUTING.
3	PROVIDE AUXILIARY DRAIN PAN BELOW BLOWER COIL, AND PIPE OVERFLOW DRAIN TO FLOOR DRAIN.
4	SEE M1.1 AND M1.2 FOR BATHROOM EXHAUST DUCT ROUTING.
5	PROVIDE ALL SUPPLY AIR PENETRATIONS OF CEILING WITH U.L. LISTED RADIATION DAMPER, GREENHECK CRD OR EQUIVALENT.
6	MOUNT TRANSFER GRILLE IN BEDROOM 6" BELOW CEILING AND MOUNT TRANSFER GRILLE ON OPPOSITE SIDE OF WALL 6" ABOVE FINISHED FLOOR. LINE STUD CAVITY WITH SHEET METAL.
7	RECIRCULATING RANGE HOOD BY OTHERS.
8	ROUTE 4"Ø EXHAUST DUCT TO MANUFACTURER'S WALL CAP WITH BACKDRAFT DAMPER AND BIRD SCREEN, COORDINATE FINAL LOCATION WITH ARCHITECT.
9	PROVIDE BALANCING DAMPER AND CONNECT OUTDOOR AIR DUCT TO RETURN DUCTWORK AT BLOWER COIL AND BALANCE TO AIRFLOW LISTED ON PLANS.
10	SEE ME1.2 FOR CONTINUATION.
11	TRANSITION FROM BLOWER COIL TO 20"x8" SUPPLY DUCT. PROVIDE MITERED ELBOW AND TRANSITION TO FLAT OVAL PRIOR TO ENTERING FITNESS ROOM. ROUTE DUCT BETWEEN CEILING AND SUSPENDED CLOUD, COORDINATE WITH EXACT REQUIREMENTS WITH ARCHITECT AND G.C.
12	PROVIDE THERMOSTAT WITH HUMIDITY CONTROL.
13	SET EXHAUST FAN TO 30 CFM.

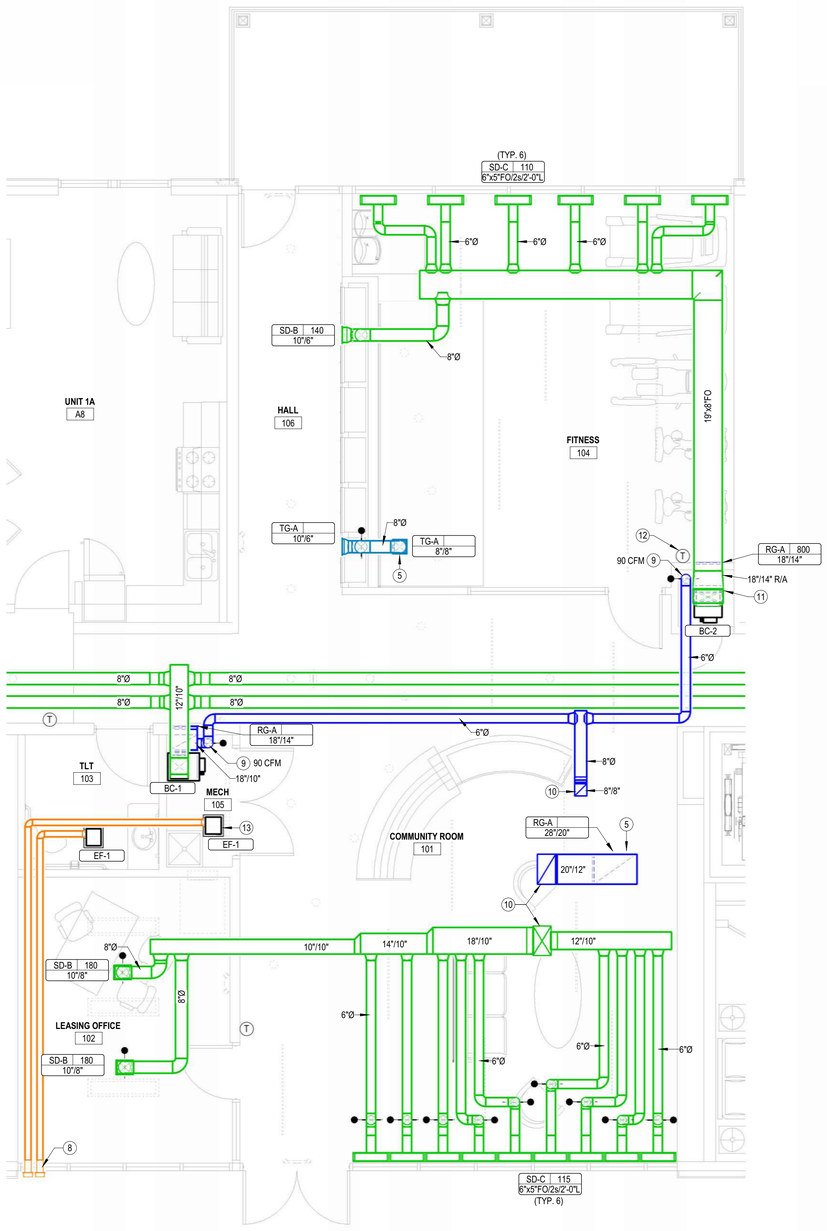

1 M4.1 COMMON SPACE ENLARGED HVAC PLAN
1/4" = 1'-0"
0 2' 4' 8'

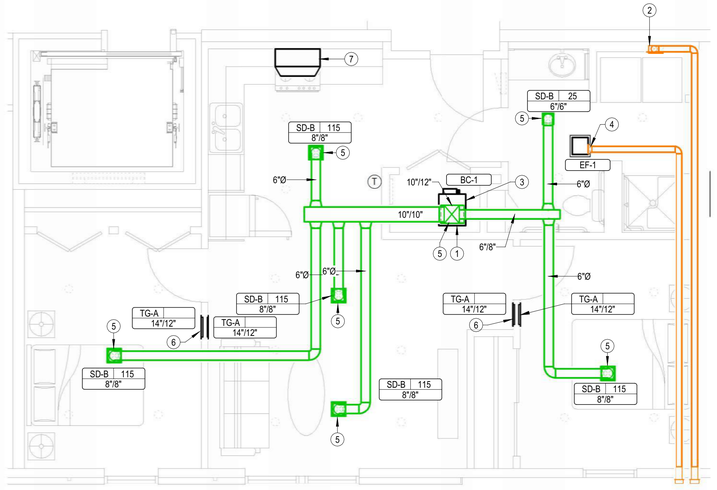

4 M4.1 2 BEDROOM (UNITS 2B/2D) ENLARGED HVAC PLAN
1/4" = 1'-0"
0 2' 4' 8'

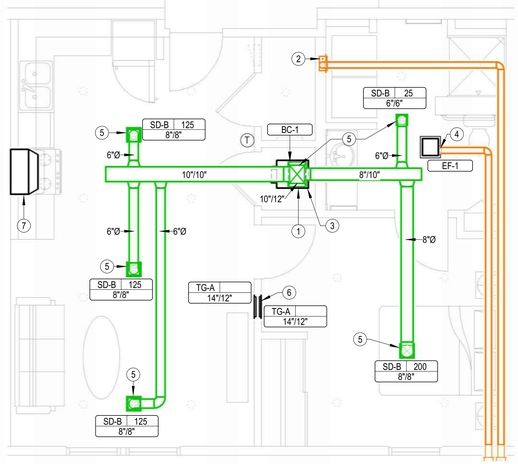

2 M4.1 1 BEDROOM (UNITS 1A/1B) ENLARGED HVAC PLAN
1/4" = 1'-0"
0 2' 4' 8'

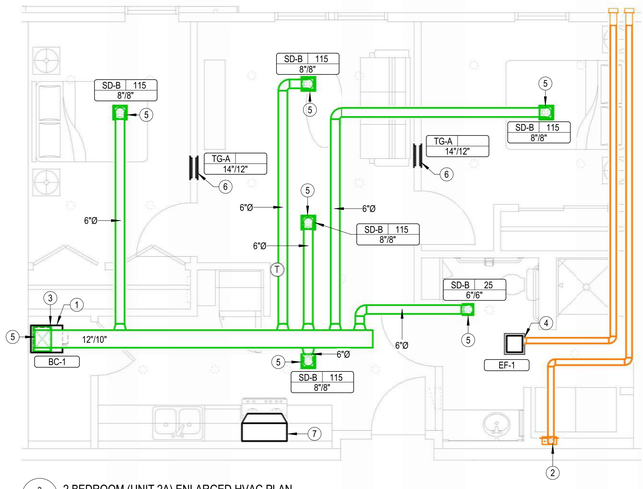

3 M4.1 2 BEDROOM (UNIT 2A) ENLARGED HVAC PLAN
1/4" = 1'-0"
0 2' 4' 8'

LST Consulting Engineers, PA
Manhattan, Kansas
785.587.8042

Wichita, Kansas
316.285.0696

www.LSTengineers.com
mail@LSTengineers.com
Project 24061

JonesGillamRenz
730 N. Ninth
Salina, KS 67401
1881 Main Street, Suite 301
Kansas City, MO 64108
785.827.0386
jgr@jgrarchitects.com

THE RESIDENCE AT HERATIGE WEST

NEW SENIOR LIVING FACILITY

ANDOVER, KANSAS

BRIAN PATRICK LIEB
LICENSED
24155
KANSAS
PROFESSIONAL ENGINEER
2025.01.10 16:43:16-06'00'

REVISIONS:

DATE: 01-10-2025
JOB: 24-3379
SHEET NO.:

M4.1

© COPYRIGHTED

PROJECT SHALL COMPLY WITH ALL REQUIREMENTS OF THE 2018 IECC. REFERENCE SPECIFICATIONS FOR COMMISSIONING REQUIREMENTS

Wichita-Sedgwick County
Metropolitan Area Building
and Construction Department

REVIEWED FOR CODE COMPLIANCE

CORRECTIONS OR COMMENTS MADE ON THESE DRAWINGS AND THIS DOCUMENT DURING THIS REVIEW DO NOT RELIEVE CONTRACTOR FROM COMPLIANCE WITH ALL REQUIREMENTS OF THE CODE OF THE MABCD, THE CITY OF WICHITA OR SEDGWICK COUNTY. THIS REVIEW IS ONLY FOR GENERAL CONFORMANCE OF THE CODE. THE CONTRACTOR IS RESPONSIBLE FOR CONFORMING AND CORRELATING ALL TECHNIQUES OF CONSTRUCTION. THIS APPROVAL IS SUBJECT TO PROVISIONS OF SECTION 107.4 OF THE 2012 INTERNATIONAL BUILDING CODE.

DATE: 02/19/25 BY: William Jerauld Jr

NOTES BY SYMBOL

1. ROUTE REFRIGERANT PIPING FROM BLOWER COIL TO HEAT PUMP. CONCEAL PIPING IN WALLS AND ABOVE CEILINGS. SEE ME1.2 FOR HEAT PUMP LOCATIONS.
2. SEE M1.1 AND M1.2 FOR DRYER EXHAUST DUCT ROUTING.
3. PROVIDE AUXILIARY DRAIN PAN BELOW BLOWER COIL, AND PIPE OVERFLOW DRAIN TO FLOOR DRAIN.
4. SEE M1.1 AND M1.2 FOR BATHROOM EXHAUST DUCT ROUTING.
5. PROVIDE ALL SUPPLY AIR PENETRATIONS OF CEILING WITH U.L. LISTED RADIATION DAMPER, GREENHECK CRD OR EQUIVALENT.
6. MOUNT TRANSFER GRILLE IN BEDROOM 6" BELOW CEILING AND MOUNT TRANSFER GRILLE ON OPPOSITE SIDE OF WALL 6" ABOVE FINISHED FLOOR. LINE STUD CAVITY WITH SHEET METAL.
7. RECIRCULATING RANGE HOOD BY OTHERS.

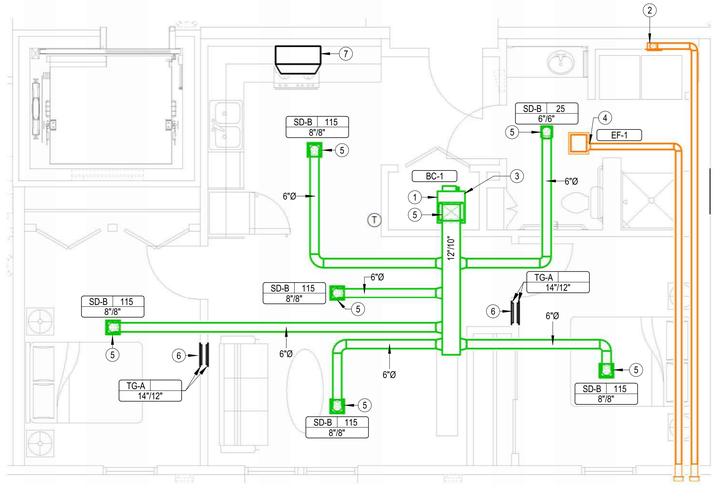

3 M4.2 2 BEDROOM (UNIT 2B) ENLARGED HVAC PLAN - FOURTH FLOOR
1/4" = 1'-0"
0 2' 4' 8'

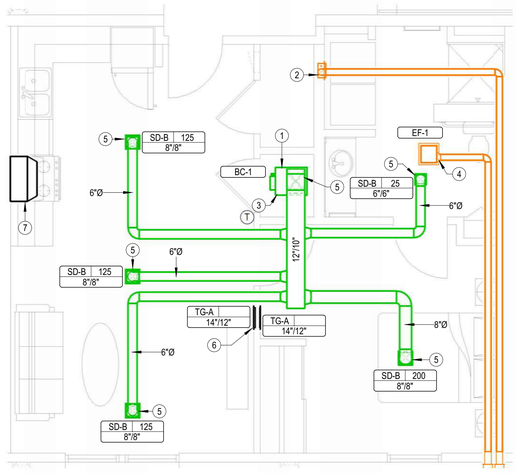

1 M4.2 1 BEDROOM (UNIT 1A) ENLARGED HVAC PLAN - FOURTH FLOOR
1/4" = 1'-0"
0 2' 4' 8'

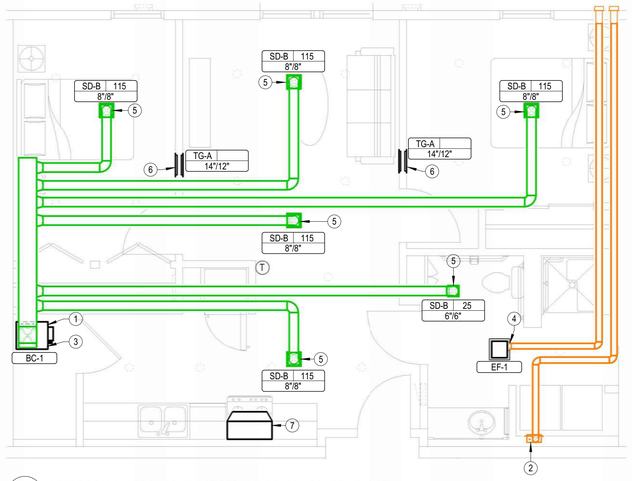

2 M4.2 2 BEDROOM (UNITS 2A/2C) ENLARGED HVAC PLAN - FOURTH FLOOR
1/4" = 1'-0"
0 2' 4' 8'

LST Consulting Engineers, PA
Manhattan, Kansas
785.587.8042

Wichita, Kansas
316.285.0696

www.LSTengineers.com
mail@LSTengineers.com
Project 24061

JonesGillamRenz
730 N. Ninth
Salina, KS 67401
1881 Main Street, Suite 301
Kansas City, MO 64108
785.827.0386
jgr@jgrarchitects.com

THE RESIDENCE AT HERATIGE WEST

NEW SENIOR LIVING FACILITY

ANDOVER, KANSAS

RYAN PATRICK LIEB LICENSED 24155 KANSAS PROFESSIONAL ENGINEER
2025.01.10 16:43:34-06'00'

REVISIONS:

DATE: 01-10-2025
JOB: 24-3379
SHEET NO.:

M4.2

COPYRIGHTED ©

Wichita-Sedgwick County
Metropolitan Area Building
and Construction Department

REVIEWED FOR CODE COMPLIANCE

CORRECTIONS OR COMMENTS MADE ON THESE DRAWINGS AND THIS DOCUMENT DURING THIS REVIEW DO NOT RELIEVE CONTRACTOR FROM COMPLIANCE WITH ALL REQUIREMENTS OF THE CODE OF THE MARCH, THE CITY OF WICHITA OR SEDGWICK COUNTY. THIS REVIEW IS ONLY FOR GENERAL CONFORMANCE OF THE CODE. THE CONTRACTOR IS RESPONSIBLE FOR CONFORMING AND CORRELATING ALL TECHNIQUES OF CONSTRUCTION. THIS APPROVAL IS SUBJECT TO PROVISIONS OF SECTION 107.4 OF THE 2012 INTERNATIONAL BUILDING CODE.

DATE: 02/19/25 BY: William Jerauld Jr

Grilles, Registers & Diffusers Schedule

ID Type	Manufacturer	Model	Application				Mounting	Include Damper	Product Specification
			Supply	Return	Exhaust	Transfer			
RG-A	Titus	355RL		■			Surface Mount	No	Steel louvered return grille
SD-A	Titus	TMS	■				Lay-In Full Face	No	24"x24" steel square louvered diffuser, neck size as indicated on drawings
SD-B	Titus	300R	■				Surface Mount	Yes	Steel double deflection supply grille with front blades parallel to long dimension
SD-C	Titus	TBD-10	■				Lay-In Full Face	No	2' Low profile slot diffuser with (2) 1.5" slots
TG-A	Titus	355RL				■	Surface Mount	No	Steel louvered return grille

NOTES:
- Maximum noise criteria shall be 25.
- Runouts to diffusers shall be same size as neck, U.N.O.
- Paint objects visible through grilles with flat black paint.
- Provide mounting frame as required for ceiling type. Coordinate with Architect.
- Verify finish with Architect.
- Provide devices with radiation dampers as required in rated ceilings. Coordinate with Architect.

Heat Pump Schedule

Identity	Manufacturer	Model	Nominal Capacity	Cooling Capacity						Heating Capacity				Electrical			
				EDB	EDB	EWB	Net Sensible Capacity	Rated Cooling Capacity	SEER2 Rating	OA EDB	EDB	Rated Heating Capacity	HSPF2 Rating	Phase	MCA	MOCP	Voltage
HP-1	Trane	4TWR4018	1.5 ton	105 °F	78 °F	67 °F	13,300 Btu/h	17,800 Btu/h	14.3	47 °F	70 °F	16,500 Btu/h	7.5	1	15.0 A	25.0 A	208 V
HP-2	Trane	4TWR4024	2.0 ton	105 °F	78 °F	67 °F	15,700 Btu/h	22,200 Btu/h	14.3	47 °F	70 °F	22,800 Btu/h	7.5	1	15.0 A	25.0 A	208 V
HP-3	Trane	4TWR4042	3.5 ton	105 °F	78 °F	67 °F	27,100 Btu/h	37,100 Btu/h	14.3	47 °F	70 °F	40,000 Btu/h	7.5	1	24.0 A	40.0 A	208 V

NOTES:
1. Refrigerant lines shall be field fabricated. Coordinate line sizing requirements with equipment manufacturer for length.
2. Provide 7-day programmable thermostat.

Blower Coil Schedule

Identity	Manufacturer	Model	Fan			Heating	Electrical		MCA	MOCP
			Airflow	ESP	Speed		Voltage	Phase		
BC-1	Trane	TEM4A0B31	600 CFM	0.50 in-wg	LOW	3.6 kW	208 V	1	25.1 A	25.0 A
BC-2	Trane	TEM4A0B31	800 CFM	0.50 in-wg	MEDIUM	5.8 kW	208 V	1	38.1 A	40.0 A
BC-3	Trane	TEM4A0C43	1,220 CFM	0.50 in-wg	MED-HIGH	7.2 kW	208 V	1	48.4 A	50.0 A

NOTES:
1. Single point connection required, coordinate the exact electrical requirements of equipment provided with E.C.
2. Electrical heater shall not operate simultaneously with heat pump. Electric heater shall be used as back-up heat only.
3. Povide downflow units with condensate overflow switch.

Electric Cabinet Heater Schedule

Mark	Manufacturer	Model	Mounting	Watts	Voltage	Phase	Description	Notes
EWH-1	Berko	FRC	Wall	1.5 kW	120 V	1	Architectural fan forced wall heater.	1,2,3
EWH-3	Berko	FRC	Wall	1.5 kW	120 V	1	Architectural fan forced wall heater.	1,2,3
EWH-4	Berko	FRC	Wall	4.0 kW	208 V	1	Architectural fan forced wall heater.	1,2,3

NOTES:
1. Provide with high temperature thermal cutout and fan delay.
2. Provide with integral thermostat and unit mounted disconnect switch.
3. Provide with manufacturer's surface mounting adapter sleeve. Coordinate exact mounting requirements and locations with Architect and rated construction.

Exhaust Fan Schedule

Mark	Manufacturer	Model	CFM	ESP	Power	Electrical		Notes
						Voltage	Phase	
EF-1	Panasonic	FV-0810VSS1	50 CFM	0.45 in-wg	21 W	120 V	1	1,2,3,4,5,6

NOTES:
1. Fixture shall be Energy Star listed.
2. Fixture shall operate at < 1 SONE.
3. Provide with EC motor with integral disconnect.
4. Provide manufacturer's wall cap or roof jack, see plans.
5. Provide integral backdraft damper.
6. Provide with manufacturer's ceiling radiation damper. Omit radiation dampers where rated ceilings are not present, coordinate with Architect.

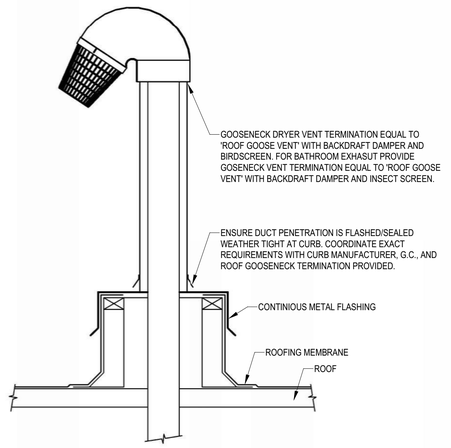

4 M6.1 GOOSENECK DUCT THROUGH ROOF DETAIL
NO SCALE

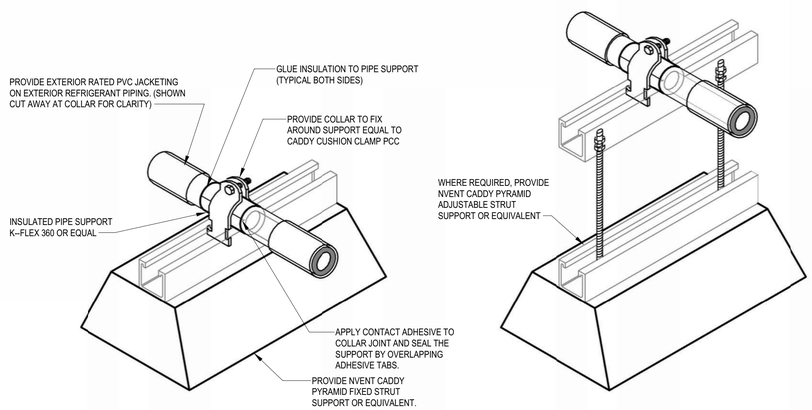

3 M6.1 REFRIGERANT ROOF AND EXTERIOR SUPPORT DETAIL
NO SCALE

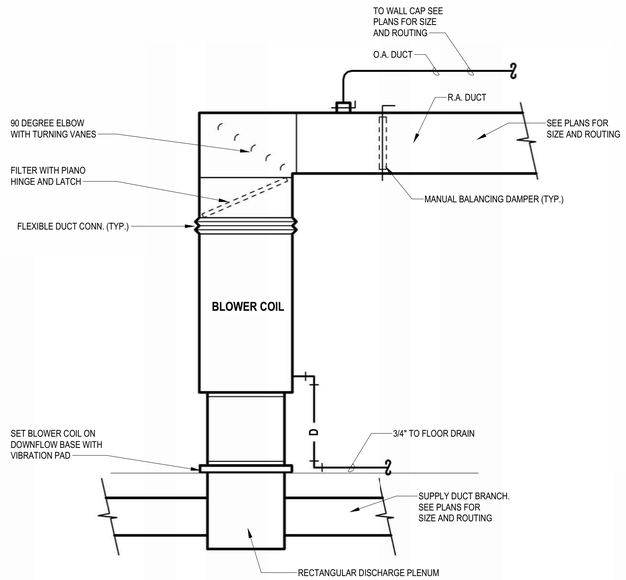

2 M6.1 DOWNFLOW BLOWER COIL DETAIL
NO SCALE

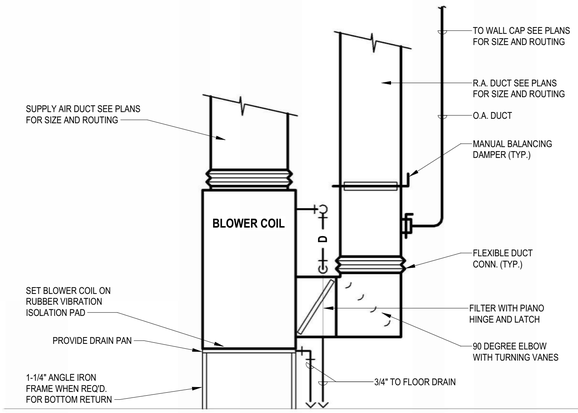

1 M6.1 UP FLOW BLOWER COIL DETAIL
NO SCALE

LST Consulting Engineers, PA
Manhattan, Kansas
785.587.8042

Wichita, Kansas
316.285.0696

www.LSTengineers.com
mail@LSTengineers.com

Project 24061

JonesGillamRenz
730 N. Ninth
Salina, KS 67401
785.827.0386
1881 Main Street, Suite 301
Kansas City, MO 64108
jgr@jgrarchitects.com

THE RESIDENCE AT HERATIGE WEST

NEW SENIOR LIVING FACILITY

ANDOVER, KANSAS

RYAN PATRICK LIPP LICENSED 24155 KANSAS PROFESSIONAL ENGINEER
2025.01.10 16:43:52-06'00'

REVISIONS:

DATE: 01-10-2025
JOB: 24-3379
SHEET NO.:

M6.1

COPYRIGHTED ©

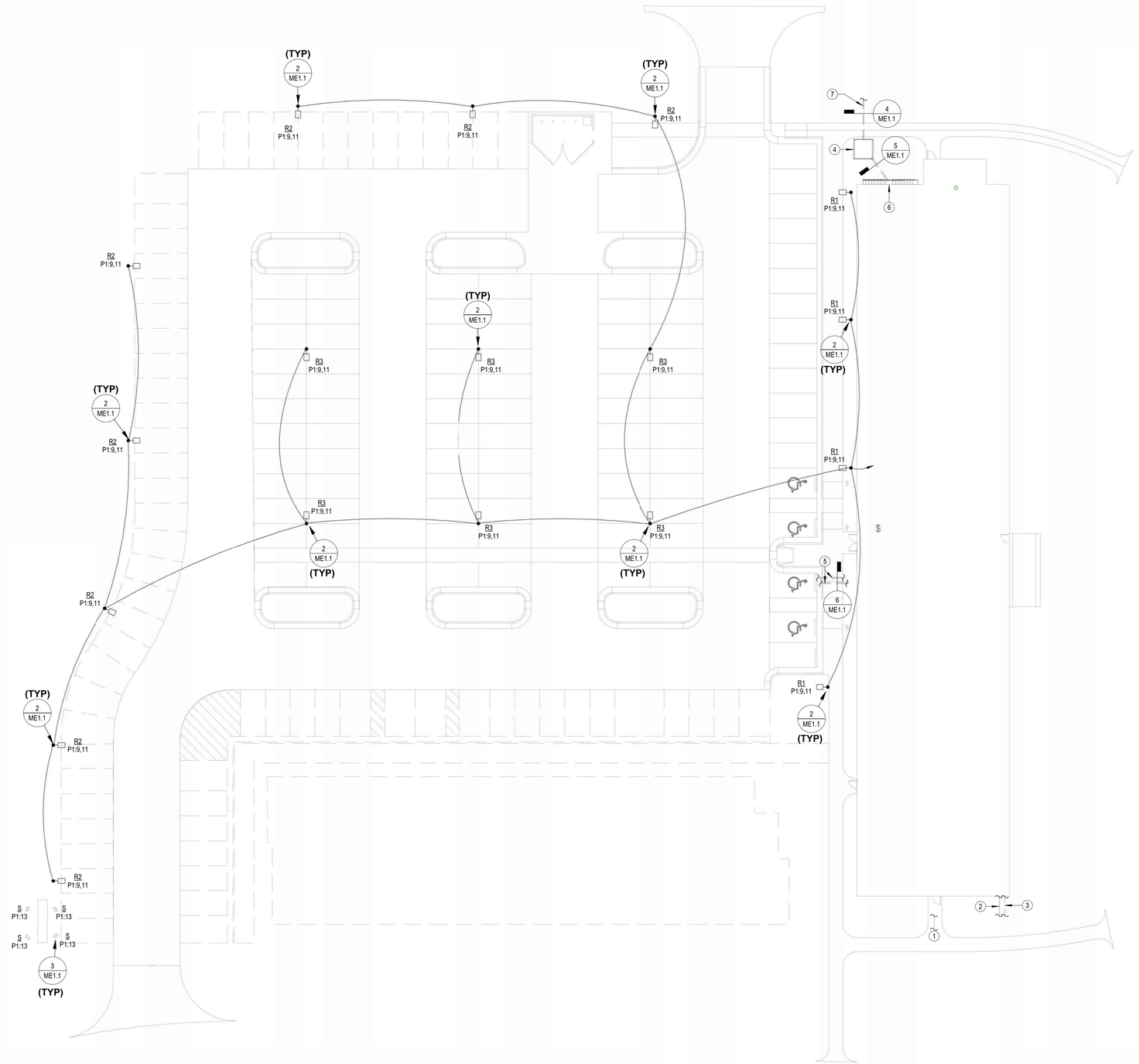

1 ME1.1 MECHANICAL AND ELECTRICAL SITE PLAN
1" = 20'-0"
0 10' 20' 40'

Wichita-Sedgwick County
Metropolitan Area Building
and Construction Department

REVIEWED FOR CODE COMPLIANCE

CORRECTIONS OR COMMENTS MADE ON THESE DRAWINGS AND THIS DOCUMENT DURING THIS REVIEW DO NOT RELIEVE CONTRACTOR FROM COMPLIANCE WITH ALL REQUIREMENTS OF THE CODE OF THE MABCD, THE CITY OF WICHITA OR SEDGWICK COUNTY. THIS REVIEW IS ONLY FOR GENERAL CONFORMANCE OF THE CODE. THE CONTRACTOR IS RESPONSIBLE FOR CONFORMING AND CORRELATING ALL TECHNIQUES OF CONSTRUCTION. THIS APPROVAL IS SUBJECT TO PROVISIONS OF SECTION 107.4 OF THE 2012 INTERNATIONAL BUILDING CODE.

DATE: 02/19/25 BY: William Jerauld Jr

NOTES BY SYMBOL

1. SANITARY SEWER, SEE CIVIL DRAWINGS FOR CONTINUATION.
2. DOMESTIC WATER SERVICE, SEE CIVIL DRAWINGS FOR CONTINUATION.
3. FIRE SUPPRESSION SERVICE, SEE CIVIL DRAWINGS FOR CONTINUATION.
4. POWER COMPANY PAD MOUNT TRANSFORMER. PROVIDE CONCRETE PAD PER EVERGY SERVICE STANDARDS. COORDINATE EXACT LOCATION AND REQUIREMENTS WITH EVERGY PRIOR TO STARTING WORK.
5. PROVIDE (2) 4" CONDUITS FOR COMMUNICATIONS SERVICES. PROVIDE PULL STRING IN EACH RACEWAY. VERIFY TERMINATION POINTS AT PROPERTY LINE WITH LOCAL COMMUNICATIONS SERVICE PROVIDERS.
6. ELECTRIC SERVICE EQUIPMENT, SEE RISER DIAGRAM ON SHEET E6.2.
7. UTILIZE EVERGY APPROVED TRENCHING CONTRACTOR TO ALLOW CONDUCTOR IN DUCT FOR PRIMARY CABLING. COORDINATE REQUIREMENTS WITH UTILITY.

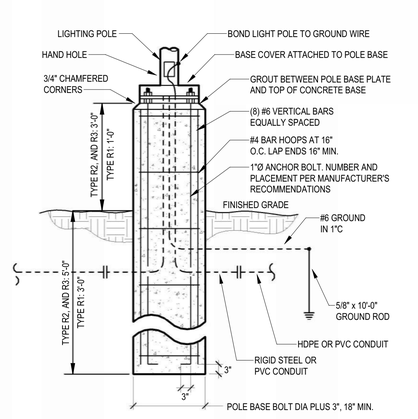

2 ME1.1 LIGHT POLE BASE DETAIL
NO SCALE

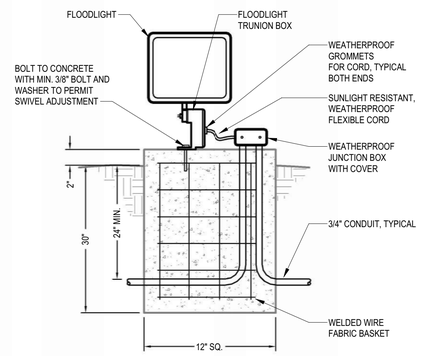

3 ME1.1 GROUND LIGHT DETAIL
NO SCALE

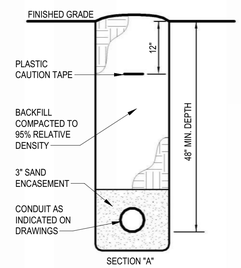

4 ME1.1 PRIMARY CONDUIT SECTION
NO SCALE

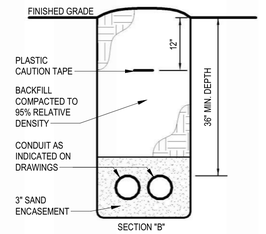

5 ME1.1 SERVICE LATERAL CONDUIT SECTION
NO SCALE

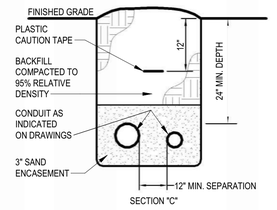

6 ME1.1 TELECOM CONDUIT SECTION
NO SCALE

LST Consulting Engineers, PA
Manhattan, Kansas
785.587.8042

Wichita, Kansas
316.285.0696

www.LSTengineers.com
mail@LSTengineers.com
Project 24061

JonesGillamRenz
730 N. Ninth
Salina, KS 67401
785.827.0386
1881 Main Street, Suite 301
Kansas City, MO 64108
jgr@jgrarchitects.com

THE RESIDENCE AT HERATIGE WEST
NEW SENIOR LIVING FACILITY
ANDOVER, KANSAS

JONATHAN PATRICK LYNCH
LICENSED
24155
KANSAS
PROFESSIONAL ENGINEER
2025.01.10 16:44:07-06'00'

REVISIONS:

DATE: 01-10-2025
JOB: 24-3379
SHEET NO.:

ME1.1

© COPYRIGHTED

Wichita-Sedgwick County
Metropolitan Area Building
and Construction Department

REVIEWED FOR CODE COMPLIANCE

CORRECTIONS OR COMMENTS MADE ON THESE DRAWINGS AND THIS DOCUMENT DURING THIS REVIEW DO NOT RELIEVE CONTRACTOR FROM COMPLIANCE WITH ALL REQUIREMENTS OF THE CODE OF THE MABCD, THE CITY OF WICHITA OR SEDGWICK COUNTY. THIS REVIEW IS ONLY FOR GENERAL CONFORMANCE OF THE CODE. THE CONTRACTOR IS RESPONSIBLE FOR CONFORMING AND CORRELATING ALL TECHNIQUES OF CONSTRUCTION. THIS APPROVAL IS SUBJECT TO PROVISIONS OF SECTION 107.4 OF THE 2012 INTERNATIONAL BUILDING CODE.

DATE: 02/19/25 BY: William Jerauld Jr

NOTES BY SYMBOL

1. ALL HEAT PUMPS, UNLESS NOTED OTHERWISE, ARE "HP-1" AND CORRESPOND TO MATCHING BLOWER COIL FOR UNIT AS TAGGED. TYPICAL
2. MOUNT HEAT PUMP TO UNISTRUT FRAME SUPPORTED ON NVENT CADDY PYRAMID ROOF SUPPORTS. PROVIDE VIBRATION ISOLATOR BETWEEN ROOF SUPPORTS AND UNISTRUT FRAME. COORDINATE INSTALLATION WITH ROOFING CONTRACTOR. TYPICAL.
3. 3" PLUMBING VENT THROUGH ROOF.
4. UNLESS NOTED OTHERWISE, PROVIDE 30A/2-POLE, NON-FUSED DISCONNECT SWITCH IN NEMA 3R ENCLOSURE AND MAKE FINAL CONNECTION TO EQUIPMENT IN LFMC RACEWAY. MOUNT TO UNISTRUT FRAME SUPPORTED FROM EQUIPMENT SUPPORT RAILS. TAG SHOWN INDICATES PANEL OF ORIGIN FOR UNIT BEING SERVED.
5. PROVIDE 60A/2-POLE, NON-FUSED DISCONNECT SWITCH IN NEMA 3R ENCLOSURE AND MAKE FINAL CONNECTION TO EQUIPMENT IN LFMC RACEWAY. MOUNT TO UNISTRUT FRAME SUPPORTED FROM EQUIPMENT SUPPORT RAILS.
6. ROUTE REFRIGERANT PIPING DOWN THROUGH ROOF TO MATCHING BLOWER COIL. PROVIDE PIPING PENETRATION ASSEMBLY EQUAL TO RPH AW SERIES ROOF VAULT WITH EXIT SEALS FOR REFRIGERANT PIPING AND ELECTRICAL CONDUIT AND TWO ADDITIONAL SPARE EXIT SEALS. SUBMIT PRODUCT DATA FOR REVIEW PRIOR TO INSTALLATION.
7. INSTALL WEATHERPROOF JUNCTION BOX ON ROOF FOR FUTURE RADON FAN. PROVIDE ADEQUATE LENGTH OF CONDUCTOR FOR CONNECTION TO FUTURE RECEPTACLE.
8. MOUNT RECEPTACLE TO UNISTRUT FRAME SUPPORTED FROM CONDENSING UNIT UNISTRUT FRAME.
9. PROVIDE PIPE CURB EQUAL TO PATE AT DUCT PENETRATIONS OF ROOF. COORDINATE REQUIREMENTS WITH G.C. DO NOT USE PITCH POCKETS. TERMINATE WITH GOOSENECK, SEE DETAIL X.M6.X FOR MORE INFORMATION.

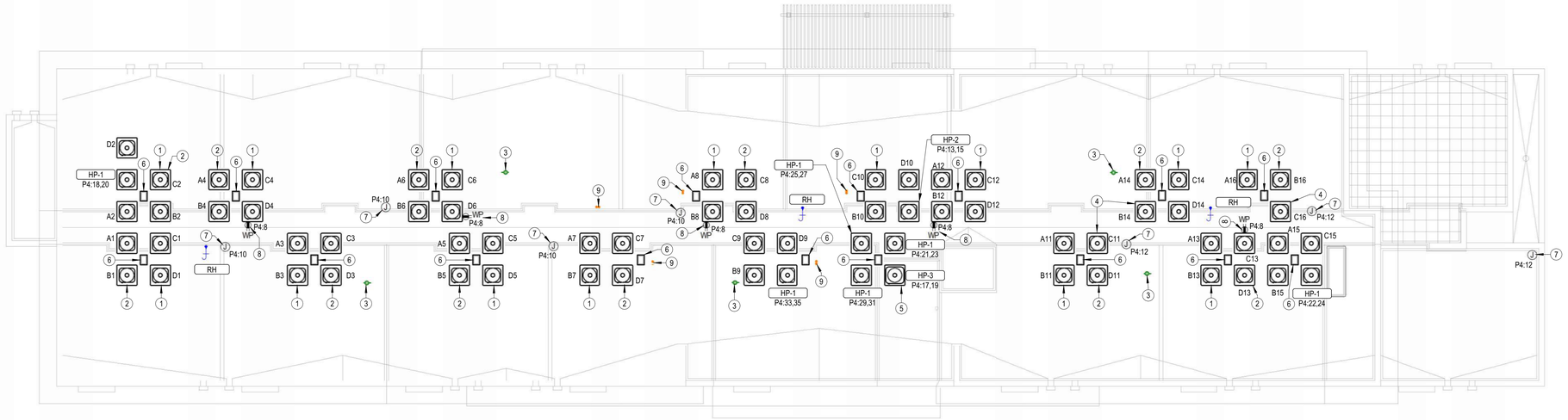

1 / ME1.2 HVAC Plan - R
3/32" = 1'-0"
0 8' 16' 24'

LST Consulting Engineers, PA
Manhattan, Kansas
785.587.8042

Wichita, Kansas
316.285.0696

www.LSTengineers.com
mail@LSTengineers.com
Project 24061

JonesGillamRenz
730 N. Ninth 1881 Main Street, Suite 301
Salina, KS 67401 Kansas City, MO 64108
785.827.0386 jgr@jgrarchitects.com

THE RESIDENCE AT HERATIGE WEST

NEW SENIOR LIVING FACILITY

ANDOVER, KANSAS

RYAN PATRICK LIEB
LICENSED
24155
KANSAS
PROFESSIONAL ENGINEER
2025.01.10 16:44:28-06'00'

REVISIONS:

DATE: 01-10-2025
JOB: 24-3379
SHEET NO.:

ME1.2

© COPYRIGHTED

General Plan Symbols

- Plan Revision Number
- Detail Number on Sheet / Sheet Number Where Detail is Placed
- Keynote Symbol
- Continuation Symbol
- Point Where New Connects To Existing
- Room Name / Number (Room 1)
- Area Being Demolished
- Area Not In Contract
- Electrical Equipment. Do not route HVAC installation above or below equipment. Maintain working clearance as indicated by dashed line.

Abbreviations

Ø	ROUND	LVR	LOUVER
ABV	ABOVE	LWT	LEAVING WATER TEMPERATURE
AC	AIR CONDITIONING	M/A	MIXED AIR
AD	AREA DRAIN	MAX	MAXIMUM
ADD	ADDENDUM	MBH	ONE THOUSAND BTU PER HOUR
AFF	ABOVE FINISHED FLOOR	MCF	ONE THOUSAND CUBIC FEET
AFUE	ANNUAL FUEL UTILIZATION EFFICIENCY	MD	MOTORIZED DAMPER
ALT	ALTERNATE	MECH	MECHANICAL
AP	ACCESS PANEL	MFR	MANUFACTURER
ARCH	ARCHITECT/ARCHITECTURAL	MIN	MINIMUM
BFF	BELOW FINISHED FLOOR	MISC	MISCELLANEOUS
BLW	BELOW	MTR	MOTOR
BTU	BRITISH THERMAL UNITS	MU/A	MAKE-UP/AIR
BTUH	BRITISH THERMAL UNITS PER HOUR	NC	NOISE CRITERIA
CAP	CAPACITY	NC	NORMALLY CLOSED
CB	CATCH BASIN	NIC	NOT IN CONTRACT
CFM	CUBIC FEET PER MINUTE	NO	NUMBER
CLG	CEILING	NO	NORMALLY OPEN
CO	CLEAN OUT	NTS	NOT TO SCALE
CW	COLD WATER	O	OXYGEN
D	DEGREE	O/A	OUTSIDE AIR
DB	DRY BULB	ORD	OVERFLOW ROOF DRAIN
DIA	DIAMETER	PD	PRESSURE DROP
DN	DOWN	PIV	POST INDICATOR VALVE
DW	DISTILLED WATER	PLBG	PLUMBING
EA	EACH	PRESS	PRESSURE
EAT	ENTERING AIR TEMPERATURE	PRV	PRESSURE REDUCING VALVE
ELEC	ELECTRICAL	PSI	POUNDS PER SQUARE INCH
EQUIP	EQUIPMENT	PSIG	POUNDS PER SQUARE INCH GAUGE
EWC	ELECTRIC WATER COOLER	PWR	POWER
EWT	ENTERING WATER TEMPERATURE	R	DUCT RISER
E/A	EXHAUST AIR	R/A	RETURN AIR
EXIST	EXISTING	RCP	RADIANT CEILING PANEL
F	DEGREES FAHRENHEIT	RD	ROOF DRAIN
FCO	FLOOR CLEAN OUT	REC	RECESSED
FD	FLOOR DRAIN	RED	REDUCER
FDC	FIRE DEPARTMENT CONNECTION	RH	RELATIVE HUMIDITY
FL	FLOOR	RL/A	RELIEF AIR
FO	FUEL OIL	RM	ROOM
FOV	FUEL OIL VENT	RPM	REVOLUTIONS PER MINUTE
FOR	FUEL OIL RETURN	RW	RAIN WATER
FOS	FUEL OIL SUPPLY	SF	SQUARE FOOT
FPM	FEET PER MINUTE	S/A	SUPPLY AIR
FS	FLOOR SINK	SAN	SANITARY
FT	FOOT/FEET	SF	SQUARE FOOT
FTR	FIN TUBE RADIATION	SD	SMOKE DAMPER
GAL	GALLON	SM	SURFACE MOUNT
GF	GAS-FIRED	SP	STANDPIPE
GC	GENERAL CONTRACTOR	SP	STATIC PRESSURE
GPM	GALLONS PER MINUTE	STM	STEAM
GW	GREASE WASTE	T	THERMOSTAT
HB	HOSE BIB	TD	TEMPERATURE DROP
HP	HORSE POWER	TDR	TRENCH DRAIN
HTG	HEATING	TEMP	TEMPERATURE
HTR	HEATER	TYP	TYPICAL
HW	HOT WATER	UG	UNDERGROUND
HYD	HYDRANT	VAC	VACUUM
ID	INDIRECT	V	VENT
IN	INCH	VAV	VARIABLE AIR VOLUME
INV	INVERT	VENT	VENTILATION
LB	POUND	VTR	VENT THROUGH ROOF
LB/HR	POUNDS PER HOUR	W	WASTE
LAT	LEAVING AIR TEMPERATURE	WB	WET BULB
LP	LOW PRESSURE	WCO	WALL CLEAN OUT
LPG	LIQUEFIED PETROLEUM GAS	WH	WALL HYDRANT

Equipment Abbreviations

AC	AIR CONDITIONING UNIT	ET	EXPANSION TANK
ACCU	AIR COOLING CONDENSING UNIT	EWH	ELECTRIC WATER HEATER
AHU	AIR HANDLING UNIT	FCU	FAN COIL UNIT
AS	AIR SEPARATOR	FP	FIRE PUMP
B	BOILER	GI	GREASE INTERCEPTOR
CH	CHILLER	GRV	GRAVITY ROOF VENTILATOR
CT	COOLING TOWER	HWP	HEATING WATER PUMP
CUH	CABINET UNIT HEATER	HRU	HEAT RECOVERY UNIT
CHWP	CHILLED WATER PUMP	PRV	POWER ROOF VENTILATOR
DBP	DOMESTIC WATER BOOSTER PUMP	RE	RETURN/EXHAUST FAN
DC	DUCT MOUNTED COIL	RTU	ROOFTOP UNIT
DCP	DOMESTIC WATER CIRCULATING PUMP	SP	SUMP PUMP
EF	EXHAUST FAN	UH	UNIT HEATER
EDC	ELECTRIC DUCT COIL	WH	WATER HEATER

*** NOTE ***

ALL OF GENERAL NOTES ON THIS SHEET ARE TO BE APPLIED TO ALL OTHER DRAWINGS IN THIS SET.THE SYMBOLS AND ABBREVIATIONS SHOWN ON THIS SHEET MAY OR MAY NOT BE USED IN THIS SET OF DRAWINGS.

Plumbing Symbols

- 2" — Nominal Pipe Size
- Above Ground Piping
- Below Ground Piping
- 1/8" / 12" SLOPE — Pipe Slope (When Applicable)
- (E) — Existing Pipe To Remain
- Pipe To Be Demolished
- CW — Domestic Cold-Water
- NPW — Non-Potable Water
- S-CW — Soft Cold-Water
- F-CW — Filtered Cold-Water
- RO — Reverse Osmosis Water
- HW — Domestic Hot-Water
- HW 140° — Domestic Hot-Water 140°
- HW-R — Hot-Water Recirculation
- HW-R 140° — Hot-Water Recirculation 140°
- SS — Sanitary Drain
- V — Sanitary Vent
- WV — Sanitary Wet Vent
- CWV — Combination DWV
- CD — Condensate Drain
- ID — Indirect Drain
- GW — Grease Waste
- GV — Grease Vent
- PD — Pump Discharge
- SD — Storm Drain
- OSD — Storm Overflow
- CA — Compressed Air
- G — Natural Gas
- LP — Liquid Propane
- Pipe Rise / Drop
- RD — Radon Mitigation

Pipe Accessory Notes

- 4" FCO — Cleanout
- 2" CHECK — Check Valve
- 2" BALANCE — Balancing Valve
- 2" CIRC — Circuit Setter
- 2" GATE — Gate Valve
- 2" S/O — Ball Valve
- 2" STRAIN — Fluid Strainer
- S — 1" GAS-CNTRL — Emergency Gas Shutoff
- 1" PLUG — Plug Valve
- 1" GAS COCK — Gas Shutoff Cock
- 1" REG — Gas Regulator
- TP — 1" T/V — Thermostatic Valve
- TMV-XT/P — Mixing Valve
- EW — TMVEM — Emergency Mixer
- 2" PRV — Pressure Reducing Valve
- W — 2" METER — Water Meter
- Double Check Valve
- Reduced Pressure Zone

Plumbing Fixture Notes

- Floor Drain
- 2" FD / 2 DFU — Design Size; Identity Type; Drainage Fixture Units
- 2" FD-3 — Floor Drain w/ Deep Seal Trap
- 2" FD-3P — Floor Drain w/ Trap Primer "P" Indicates Primer Connection
- 2" FD-7 — Floor Drain w/ Integral Cleanout
- 3" AD-1 — Area Drain (No Trap)
- 6" DD-1 — Deck Drain
- 3" HD-1 — Hub Drain (Funnel Type)
- 3" FS — Floor Sink
- 8" SD-12 — Roof Drain
- 6" SD-1 / 2000 SF — Combination Drain; Rainfall Surface Area

Wichita-Sedgwick County
Metropolitan Area Building
and Construction Department

REVIEWED FOR CODE COMPLIANCE

CORRECTIONS OR COMMENTS MADE ON THESE DRAWINGS AND THIS DOCUMENT DURING THIS REVIEW DO NOT RELIEVE CONTRACTOR FROM COMPLIANCE WITH ALL REQUIREMENTS OF THE CODE OF THE MABCD, THE CITY OF WICHITA OR SEDGWICK COUNTY. THIS REVIEW IS ONLY FOR GENERAL CONFORMANCE OF THE CODE. THE CONTRACTOR IS RESPONSIBLE FOR CONFORMING AND CORRELATING ALL TECHNIQUES OF CONSTRUCTION. THIS APPROVAL IS SUBJECT TO PROVISIONS OF SECTION 107.4 OF THE 2012 INTERNATIONAL BUILDING CODE.

DATE: 02/19/25 BY: William Jerauld Jr

Plumbing Sheet Index

P1.1	DWV UNDER FLOOR PLAN
P1.2	DWV 1ST AND 2ND PLANS
P1.3	DWV 3RD AND 4TH PLANS
P1.4	DOMESTIC WATER 1ST & 2ND PLANS
P1.5	DOMESTIC WATER 3RD AND 4TH PLANS
P4.1	ENLARGED DOMESTIC WATER PLANS
P9.1	PLUMBING RISERS
P9.2	PLUMBING RISERS
P0.1	PLUMBING TITLE SHEET
P6.1	PLUMBING SCHEDULES

GENERAL PLUMBING NOTES

A. FIELD VERIFY ALL NEW WATER, WASTE, AND VENT PIPING CONNECTIONS AND PROVIDE NEW CONNECTIONS AS REQUIRED FOR PROPERLY OPERATING SYSTEMS.
B. PITCH UNDERFLOOR SANITARY WASTE PIPING OVER 2" AT 1/8" PER FOOT, 2" AND SMALLER AT 1/4" PER FOOT.
C. FIELD VERIFY LOCATION AND INVERTS OF SITE UTILITIES PRIOR TO INSTALLATION.
D. ROUTE DOMESTIC WATER, AND SANITARY SEWER SERVICES TO SITE UTILITIES 5'-0" FROM BUILDING UNLESS NOTED OTHERWISE. REFER TO CIVIL PLANS.
E. WASTE AND VENT PIPING BELOW FLOOR AND THROUGH FLOOR SHALL BE 2" MINIMUM.
F. LOCATIONS OF PIPING AND EQUIPMENT AS INDICATED ON THE DRAWINGS ARE APPROXIMATE AND SUBJECT TO MINOR ADJUSTMENTS IN THE FIELD. WORK SHALL BE COORDINATED WITH ALL OTHER TRADES TO AVOID INTERFERENCE IN THE FIELD.
G. FINAL PRODUCT SHALL BE A COMPLETE AND FUNCTIONING SYSTEM, AND SHALL CONFORM TO ALL REQUIREMENTS OF APPLICABLE FEDERAL, STATE, AND LOCAL CODES, INCLUDING BUT NOT LIMITED TO THE INTERNATIONAL (OR UNIFORM, DEPENDING ON JURISDICTION) PLUMBING CODE AND INTERNATIONAL MECHANICAL CODE.
H. LOCATE EQUIPMENT REQUIRING ACCESS 2'-0" MAXIMUM ABOVE CEILING.
I. LOCATE PIPING AND EQUIPMENT OUTSIDE OF THE NEC REQUIRED CLEAR SPACE ABOVE AND AROUND ELECTRICAL PANELS, TRANSFORMERS AND OTHER ELECTRICAL EQUIPMENT. COORDINATE WITH ELECTRICAL CONTRACTOR.
J. PENETRATIONS OF RATED ASSEMBLIES SHALL BE FIRE STOPPED. FIRE STOPPING SHALL BE U.L. LISTED. SEE ARCHITECTURAL DRAWINGS FOR LOCATIONS OF RATED ASSEMBLIES.
K. PROVIDE SLEEVES AND/OR OPENINGS TO RUN PIPES THROUGH FOUNDATIONS, FLOORS, WALLS, AND ROOF.
L. MAINTAIN CLEAR ACCESS TO SERVICE EQUIPMENT AND OTHER ACCESSORIES REQUIRING SERVICE, VISUAL INSPECTION OR HAND OPERATION. WHERE INDICATED OR REQUIRED, PROVIDE ACCESS PANELS OF THE TYPE SELECTED TO SUIT MATERIALS IN WHICH INSTALLED.
M. TRANSITION FROM PIPING SIZES SHOWN TO PROPERLY CONNECT TO EQUIPMENT.
N. PIPE SIZES SHOWN SHALL BE CONTINUED IN THE DIRECTION OF FLOW UNTIL ANOTHER SIZE IS SHOWN.
O. INSTALL ALL EQUIPMENT IN ACCORDANCE WITH THE RESPECTIVE MANUFACTURER'S WRITTEN INSTALLATION INSTRUCTIONS, AT A LEVEL OF QUALITY AND WORKMANSHIP CONSISTENT WITH THE SPECIFICATIONS.
P. INSTALL EXPOSED PIPING AS HIGH AS PRACTICAL IN ROOMS WITHOUT CEILINGS.
Q. PRIOR TO STARTING WORK, SUBMIT SHOP DRAWINGS FOR ALL PLUMBING EQUIPMENT AND MATERIALS. SUBSTITUTE EQUIPMENT AND MATERIALS INSTALLED WITHOUT PRIOR APPROVAL SHALL BE SUBJECT TO REPLACEMENT AT CONTRACTOR'S EXPENSE.
R. CONTRACTOR SHALL OBTAIN AND PAY FOR ALL NECESSARY PERMITS AND SHALL ARRANGE FOR ALL INSPECTIONS AS REQUIRED.
S. PROVIDE ONE YEAR WARRANTY FOR ALL WORKMANSHIP AND MATERIALS AFTER THE DATE OF FINAL ACCEPTANCE.

GENERAL PLUMBING DEMOLITION NOTES

A. ALL PIPING TAKEN OUT OF SERVICE SHALL BE REMOVED. WHERE PIPING IS TO BE REMOVED IS CONNECTED TO EXISTING PIPING TO REMAIN, PIPING SHALL BE REMOVED BACK TO MAIN AND CAPPED, UNLESS INDICATED OTHERWISE. CONTRACTOR SHALL DISPOSE OF PIPING OR DELIVER TO OWNER, AS DIRECTED BY OWNER.
B. WHERE PIPING TAKEN OUT OF SERVICE IS LOCATED BELOW SLAB AND IS UNABLE TO BE REMOVED, CAP BELOW SLAB.
C. COORDINATE CUTTING, PATCHING OF EXISTING WALLS, CEILINGS, ROOF AND FLOORS AFFECTED BY MECHANICAL DEMOLITION WITH G.C.
D. ALL EQUIPMENT TAKEN OUT OF SERVICE SHALL BE REMOVED. EQUIPMENT SHALL BE DELIVERED TO OWNER OR DISPOSED OF AS DIRECTED BY OWNER.
E. REMOVE ALL PLUMBING INSTALLATION FROM PROJECT AREA, UNLESS REQUIRED FOR NEW WORK OR EXISTING INSTALLATION NOT AFFECTED BY REMODEL. COORDINATE WITH OWNER AND G.C.
F. SERVICES TO ITEMS NOT REMOVED AS PART OF THIS WORK SHALL BE RESTORED UPON COMPLETION OF THIS WORK TO FULLY OPERATIONAL CONDITION.
G. NOT ALL ITEMS REQUIRED TO BE DEMOLISHED MAY BE INDICATED ON DRAWINGS. ALL DEMOLITION OF AFFECTED SPACE SHALL BE PERFORMED AS IF INDICATED.
H. FIELD VERIFY EXACT LOCATION OF ALL EXISTING PLUMBING INSTALLATION INDICATED ON DRAWINGS.
I. ALL ITEMS TO BE RE-USED OR RELOCATED SHALL BE CLEANED, REPAIRED, AND RESTORED TO LIKE NEW CONDITION PRIOR TO RE-USE.

LST Consulting Engineers, PA
Manhattan, Kansas
785.587.8042

Wichita, Kansas
316.285.0696

www.LSTengineers.com
mail@LSTengineers.com

Project 24061

JonesGillamRenz
730 N. Ninth
Salina, KS 67401
1881 Main Street, Suite 301
Kansas City, MO 64108
785.827.0386
jgr@jgrarchitects.com

THE RESIDENCE AT HERATIGE WEST

NEW SENIOR LIVING FACILITY

ANDOVER, KANSAS

BRIAN PATRICK LIPS — LICENSED — 24155 — KANSAS — PROFESSIONAL ENGINEER
2025.01.10 16:44:55-06'00'

REVISIONS:

DATE: 01-10-2025
JOB: 24-3379
SHEET NO.:

P0.1

© COPYRIGHTED

Wichita-Sedgwick County
Metropolitan Area Building
and Construction Department

REVIEWED FOR CODE COMPLIANCE

CORRECTIONS OR COMMENTS MADE ON THESE DRAWINGS AND THIS DOCUMENT DURING THIS REVIEW DO NOT RELIEVE CONTRACTOR FROM COMPLIANCE WITH ALL REQUIREMENTS OF THE CODE OF THE MABCD, THE CITY OF WICHITA OR SEDGWICK COUNTY. THIS REVIEW IS ONLY FOR GENERAL CONFORMANCE OF THE CODE. THE CONTRACTOR IS RESPONSIBLE FOR CONFORMING AND CORRELATING ALL TECHNIQUES OF CONSTRUCTION. THIS APPROVAL IS SUBJECT TO PROVISIONS OF SECTION 107.4 OF THE 2012 INTERNATIONAL BUILDING CODE.

DATE: 02/19/25 BY: William Jerauld Jr

PLUMBING SIZING SYMBOLS	
x"	DRAIN (X = SIZE)
x"	VENT (X = SIZE)
x"	WASTE STACK VENT (X = SIZE)

NOTES BY SYMBOL

1. 4" PVC PIPE FOR RADON SYSTEM. COORDINATE EXACT REQUIREMENTS WITH ARCHITECT.
2. ROUTE 2" DISCHARGE FROM SUMP PUMP TO CONNECT TO UNDERGROUND STORM SEWER SEE CIVIL FOR CONTINUATION. COORDINATE WITH G.C.
3. ELEVATOR PIT SUMP PUMP, SEE 3:P6.1 FOR MORE INFORMATION.

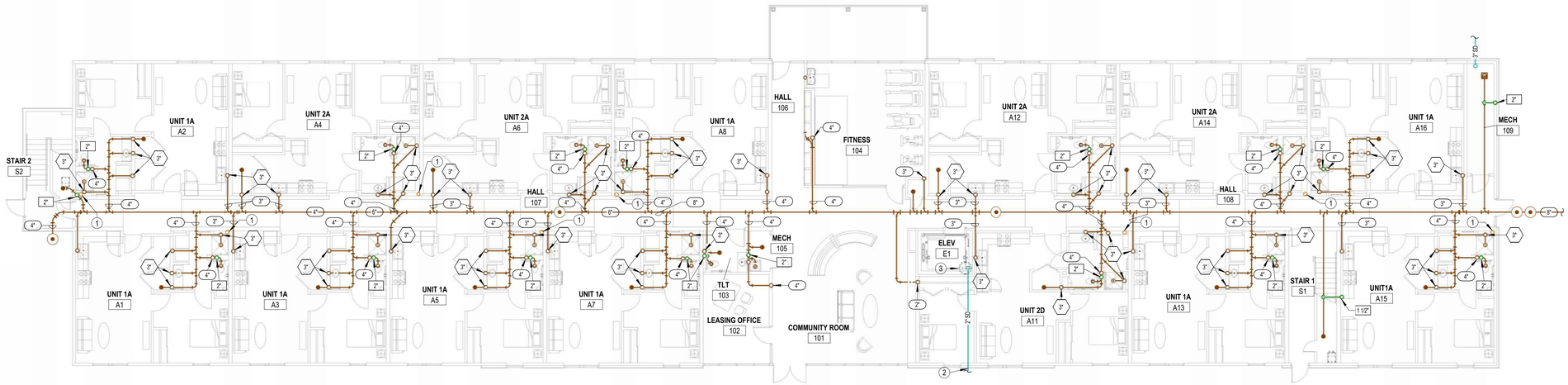

1 P1.1 UNDERFLOOR WASTE AND VENT PLAN
3/32" = 1'-0"
0 8' 16' 24'

LST Consulting Engineers, PA
Manhattan, Kansas
785.587.8042

Wichita, Kansas
316.285.0696

www.LSTengineers.com
mail@LSTengineers.com
Project 24061

JonesGillamRenz
730 N. Ninth
Salina, KS 67401
785.827.0386
1881 Main Street, Suite 301
Kansas City, MO 64108
jgr@jgrarchitects.com

THE RESIDENCE AT HERATIGE WEST

NEW SENIOR LIVING FACILITY

ANDOVER, KANSAS

RYAN PATRICK LIES
LICENSED
24155
KANSAS
PROFESSIONAL ENGINEER
2025.01.10 16:45:14-06'00'

REVISIONS:

DATE: 01-10-2025
JOB: 24-3379
SHEET NO.:

P1.1

COPYRIGHTED ©

Wichita-Sedgwick County
Metropolitan Area Building
and Construction Department

REVIEWED FOR CODE COMPLIANCE

CORRECTIONS OR COMMENTS MADE ON THESE DRAWINGS AND THIS DOCUMENT DURING THIS REVIEW DO NOT RELIEVE CONTRACTOR FROM COMPLIANCE WITH ALL REQUIREMENTS OF THE CODE OF THE MABCD, THE CITY OF WICHITA OR SEDGWICK COUNTY. THIS REVIEW IS ONLY FOR GENERAL CONFORMANCE OF THE CODE. THE CONTRACTOR IS RESPONSIBLE FOR CONFORMING AND CORRELATING ALL TECHNIQUES OF CONSTRUCTION. THIS APPROVAL IS SUBJECT TO PROVISIONS OF SECTION 107.4 OF THE 2012 INTERNATIONAL BUILDING CODE.

DATE: 02/19/25 BY: William Jerauld Jr

PLUMBING SIZING SYMBOLS	
x"	DRAIN (X = SIZE)
x"	VENT (X = SIZE)
x"	WASTE STACK VENT (X = SIZE)

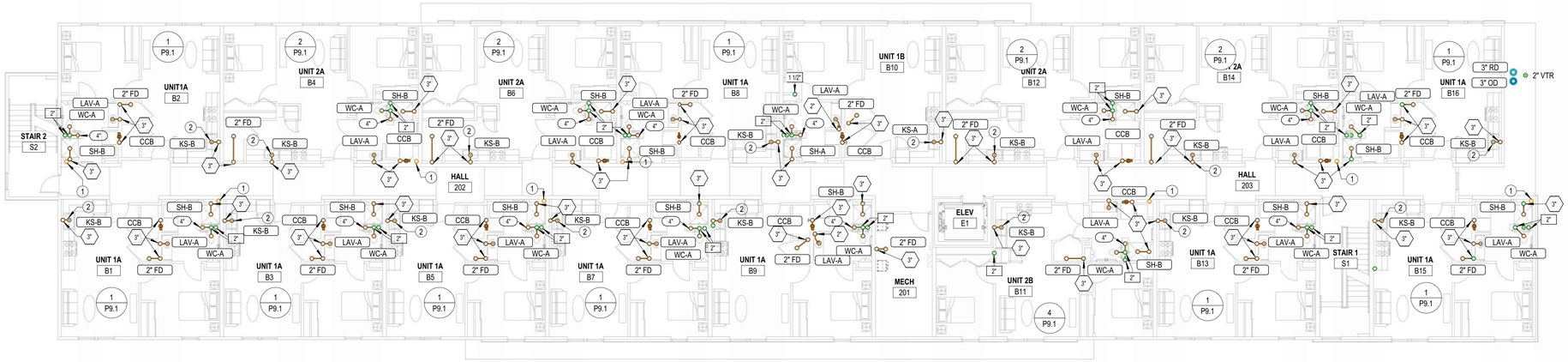

NOTES BY SYMBOL

1. 4" PVC PIPE FOR RADON SYSTEM. COORDINATE EXACT REQUIREMENTS WITH ARCHITECT.
2. PROVIDE INDIRECT CONNECTION AT GARBAGE DISPOSER AND CONNECT DISHWASHER. ROUTE DRAIN FROM DISHWASHER AT BACK OF CABINETRY. COORDINATE EXACT ROUTING WITH G.C.
3. ROUTE ROOF DRAIN PIPING DOWN ALONG WALL AND EXTEND TO UNDERGROUND STORM DRAIN PIPING IN THIS AREA. SEE CIVIL DRAWINGS FOR CONTINUATION.
4. ROUTE ROOF DRAIN PIPING DOWN ALONG WALL AND TERMINATE WITH DOWNSPOUT NOZZLE EQUAL TO ZURN MODEL ZF199 WITH THREADED OUTLET AND FLANGE TO SECURE NOZZLE TO WALL. INSTALL DOWNSPOUT 24" AFG. COORDINATE COLOR WITH ARCHITECT.
5. UP TO WATER CLOSET.
6. UP TO SHOWER.
7. COORDINATE ROUTING OF PIPING IN THIS AREA WITH STRUCTURE. ALL PENETRATIONS OF BEAMS IN THIS AREA MUST BE APPROVED BY STRUCTURAL ENGINEER IN WRITING.
8. UP TO FLOOR DRAIN.

2 P1.2 SECOND FLOOR WASTE AND VENT PLAN
3/32" = 1'-0"
0 8' 16' 24'

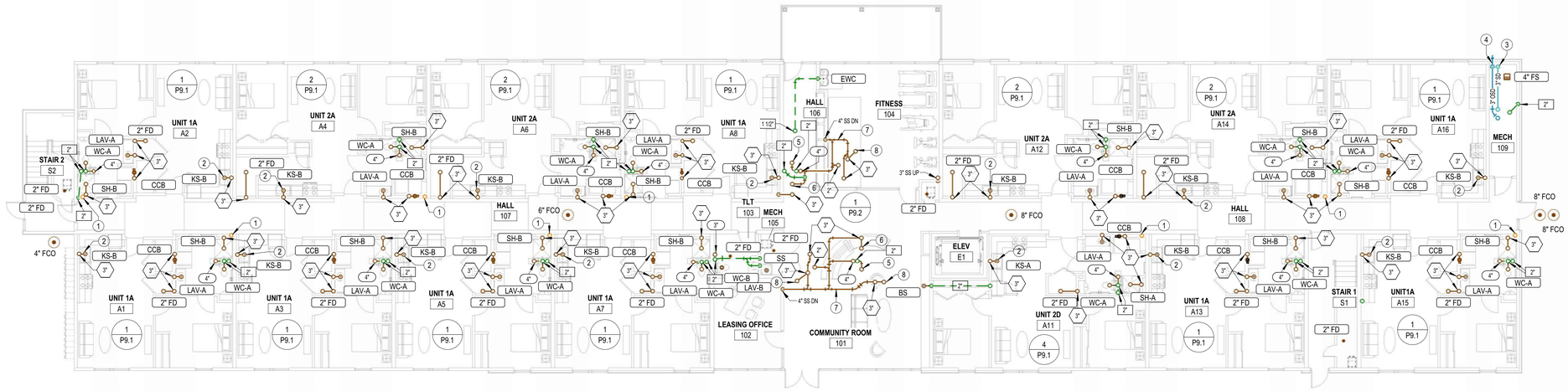

1 P1.2 FIRST FLOOR WASTE AND VENT PLAN
3/32" = 1'-0"
0 8' 16' 24'

LST Consulting Engineers, PA
Manhattan, Kansas
785.587.8042

Wichita, Kansas
316.285.0696

www.LSTengineers.com
mail@LSTengineers.com
Project 24061

JonesGillamRenz
730 N. Ninth
Salina, KS 67401
785.827.0386
1881 Main Street, Suite 301
Kansas City, MO 64108
jgr@jgrarchitects.com

THE RESIDENCE AT HERATIGE WEST

NEW SENIOR LIVING FACILITY

ANDOVER, KANSAS

BRIAN PATRICK LIPS
LICENSED
24155
KANSAS
PROFESSIONAL ENGINEER
2025.01.10
16:45:36-06'00'

REVISIONS:

DATE: 01-10-2025
JOB: 24-3379
SHEET NO.:

P1.2

COPYRIGHTED ©

Wichita-Sedgwick County
Metropolitan Area Building
and Construction Department

REVIEWED FOR CODE COMPLIANCE

CORRECTIONS OR COMMENTS MADE ON THESE DRAWINGS AND THIS DOCUMENT DURING THIS REVIEW DO NOT RELIEVE CONTRACTOR FROM COMPLIANCE WITH ALL REQUIREMENTS OF THE CODE OF THE MABCD, THE CITY OF WICHITA OR SEDGWICK COUNTY. THIS REVIEW IS ONLY FOR GENERAL CONFORMANCE OF THE CODE. THE CONTRACTOR IS RESPONSIBLE FOR CONFORMING AND CORRELATING ALL TECHNIQUES OF CONSTRUCTION. THIS APPROVAL IS SUBJECT TO PROVISIONS OF SECTION 107.4 OF THE 2012 INTERNATIONAL BUILDING CODE.

DATE: 02/19/25 BY: William Jerauld Jr

PLUMBING SIZING SYMBOLS	
(X")	DRAIN (X = SIZE)
X"	VENT (X = SIZE)
(X")	WASTE STACK VENT (X = SIZE)

NOTES BY SYMBOL

1. 4" PVC PIPE FOR RADON SYSTEM. COORDINATE EXACT REQUIREMENTS WITH ARCHITECT.
2. PROVIDE INDIRECT CONNECTION AT GARBAGE DISPOSER AND CONNECT DISHWASHER. ROUTE DRAIN FROM DISHWASHER AT BACK OF CABINETRY. COORDINATE EXACT ROUTING WITH G.C.

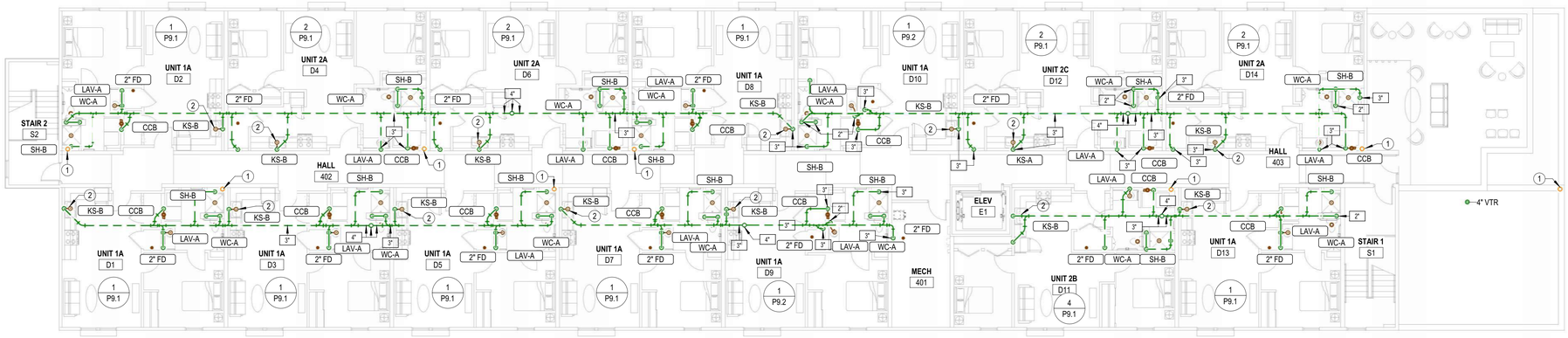

2 P1.3 FOURTH FLOOR WASTE AND VENT PLAN
3/32" = 1'-0"
0 8' 16' 24'

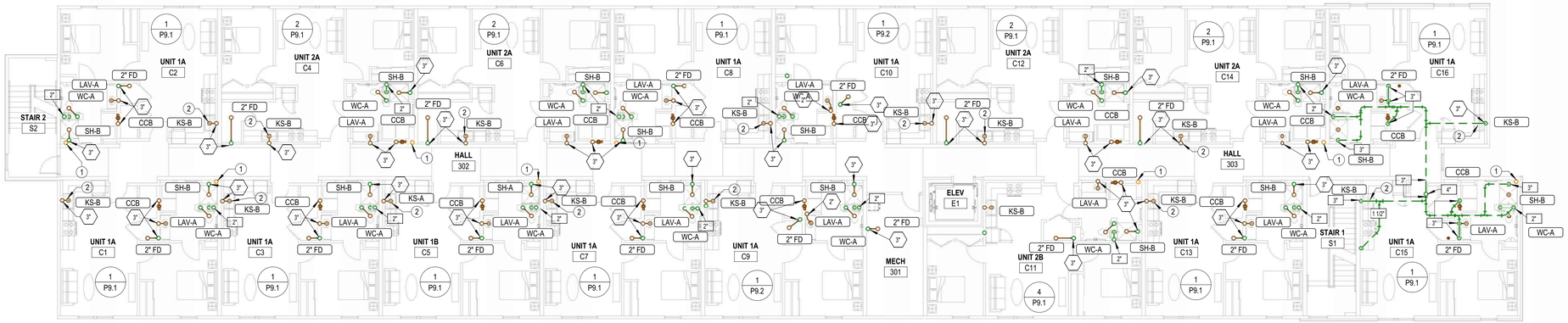

1 P1.3 THIRD FLOOR WASTE AND VENT PLAN
3/32" = 1'-0"
0 8' 16' 24'

LST Consulting Engineers, PA
Manhattan, Kansas
785.587.8042

Wichita, Kansas
316.285.0696

www.LSTengineers.com
mail@LSTengineers.com
Project 24061

JonesGillamRenz
730 N. Ninth
Salina, KS 67401
1881 Main Street, Suite 301
Kansas City, MO 64108
jgr@jgrarchitects.com
785.827.0386

THE RESIDENCE AT HERATIGE WEST
NEW SENIOR LIVING FACILITY
ANDOVER, KANSAS



REVISIONS:

DATE: 01-10-2025
JOB: 24-3379
SHEET NO.:

P1.3

COPYRIGHTED ©

Wichita-Sedgwick County
Metropolitan Area Building
and Construction Department

REVIEWED FOR CODE COMPLIANCE

CORRECTIONS OR COMMENTS MADE ON THESE DRAWINGS AND THIS DOCUMENT DURING THIS REVIEW DO NOT RELIEVE CONTRACTOR FROM COMPLIANCE WITH ALL REQUIREMENTS OF THE CODE OF THE MABCD, THE CITY OF WICHITA OR SEDGWICK COUNTY. THIS REVIEW IS ONLY FOR GENERAL CONFORMANCE OF THE CODE. THE CONTRACTOR IS RESPONSIBLE FOR CONFORMING AND CORRELATING ALL TECHNIQUES OF CONSTRUCTION. THIS APPROVAL IS SUBJECT TO PROVISIONS OF SECTION 107.4 OF THE 2012 INTERNATIONAL BUILDING CODE.

DATE: 02/19/25 BY: William Jerauld Jr

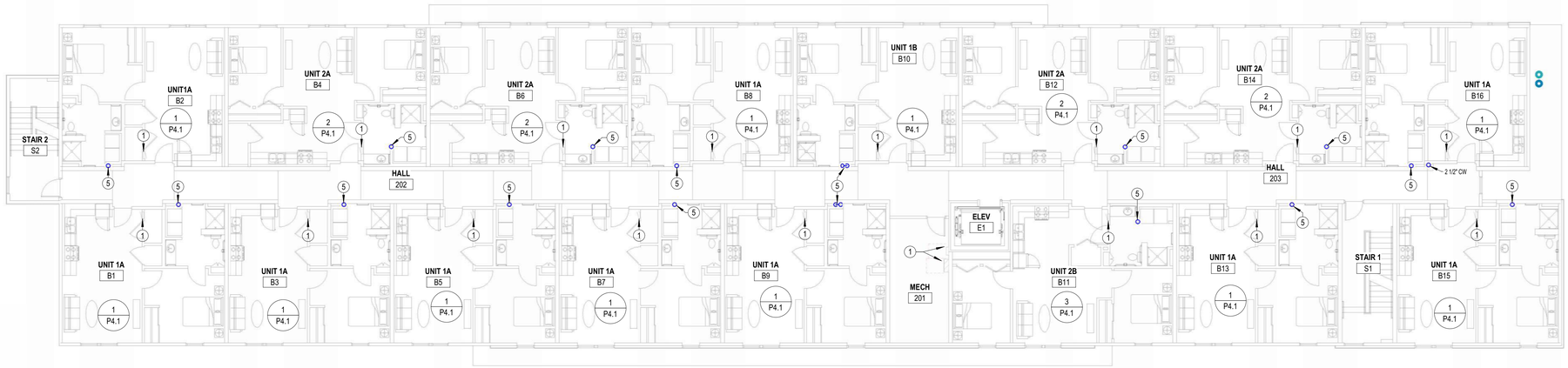

PIPING FOR DWELLING UNITS ON 2ND AND 4TH FLOORS SHALL BE ROUTED BELOW THE FLOOR. DO NOT DOMESTIC WATER PIPING IN THE ATTIC

SEE SHEET P4.1 FOR PLUMBING FIXTURE TAGS

NOTES BY SYMBOL

1. ELECTRICAL EQUIPMENT SHOWN FOR COORDINATION. DO NOT ROUTE PIPING ABOVE OR BELOW EQUIPMENT, AND MAINTAIN WORKING CLEARANCE SHOWN.
2. FIRE PROTECTION SERVICE ENTRANCE. INSTALL IN ACCORDANCE WITH NFPA 13. COORDINATE LOCATION OF ALL VALVES AND APPURTENANCES WITH AHJ. SEE 4:P8.1 FOR MORE INFORMATION.
3. PROVIDE SHUT-OFF VALVE AT WATER SERVICE ENTRANCE WITH PRESSURE REDUCING VALVE SET TO 80 PSI IF REQUIRED. COORDINATE REQUIREMENTS WITH CITY OF ANDOVER.
4. SEE ENLARGED DOMESTIC WATER PLANS FOR CONTINUATION.
5. 1" DOMESTIC WATER FROM FLOOR BELOW, SEE ENLARGED DOMESTIC WATER PLANS FOR MORE INFORMATION.
6. COORDINATE ROUTING OF PIPING IN THIS AREA WITH STRUCTURE. ALL PENETRATIONS OF BEAMS IN THIS AREA MUST BE APPROVED BY STRUCTURAL ENGINEER IN WRITING.

2 P1.4 SECOND FLOOR DOMESTIC WATER PLAN
3/32" = 1'-0"
0 8' 16' 24'

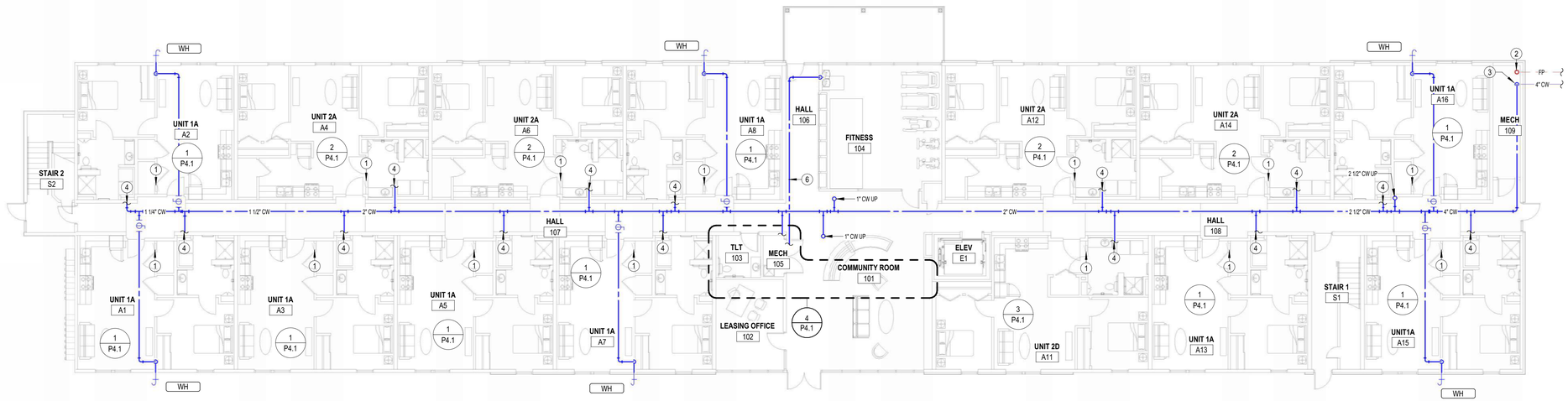

PIPING FOR DWELLING UNITS ON 2ND AND 4TH FLOORS SHALL BE ROUTED BELOW THE FLOOR. DO NOT DOMESTIC WATER PIPING IN THE ATTIC

1 P1.4 FIRST FLOOR DOMESTIC WATER PLAN
3/32" = 1'-0"
0 8' 16' 24'

LST Consulting Engineers, PA
Manhattan, Kansas
785.587.8042

Wichita, Kansas
316.285.0696

www.LSTengineers.com
mail@LSTengineers.com
Project 24061

JonesGillamRenz
730 N. Ninth 1881 Main Street, Suite 301
Salina, KS 67401 Kansas City, MO 64108
785.827.0386 jgr@jgrarchitects.com

THE RESIDENCE AT HERATIGE WEST
NEW SENIOR LIVING FACILITY
ANDOVER, KANSAS

RYAN PATRICK LIEN LICENSED 24155 KANSAS PROFESSIONAL ENGINEER
2025.01.10 16:46:19-06'00'

REVISIONS:

DATE: 01-10-2025
JOB: 24-3379
SHEET NO.:

P1.4

© COPYRIGHTED

Wichita-Sedgwick County
Metropolitan Area Building
and Construction Department

REVIEWED FOR CODE COMPLIANCE

CORRECTIONS OR COMMENTS MADE ON THESE DRAWINGS AND THIS DOCUMENT DURING THIS REVIEW DO NOT RELIEVE CONTRACTOR FROM COMPLIANCE WITH ALL REQUIREMENTS OF THE CODE OF THE MABCD, THE CITY OF WICHITA OR SEDGWICK COUNTY. THIS REVIEW IS ONLY FOR GENERAL CONFORMANCE OF THE CODE. THE CONTRACTOR IS RESPONSIBLE FOR CONFORMING AND CORRELATING ALL TECHNIQUES OF CONSTRUCTION. THIS APPROVAL IS SUBJECT TO PROVISIONS OF SECTION 107.4 OF THE 2012 INTERNATIONAL BUILDING CODE.

DATE: 02/19/25 BY: William Jerauld Jr

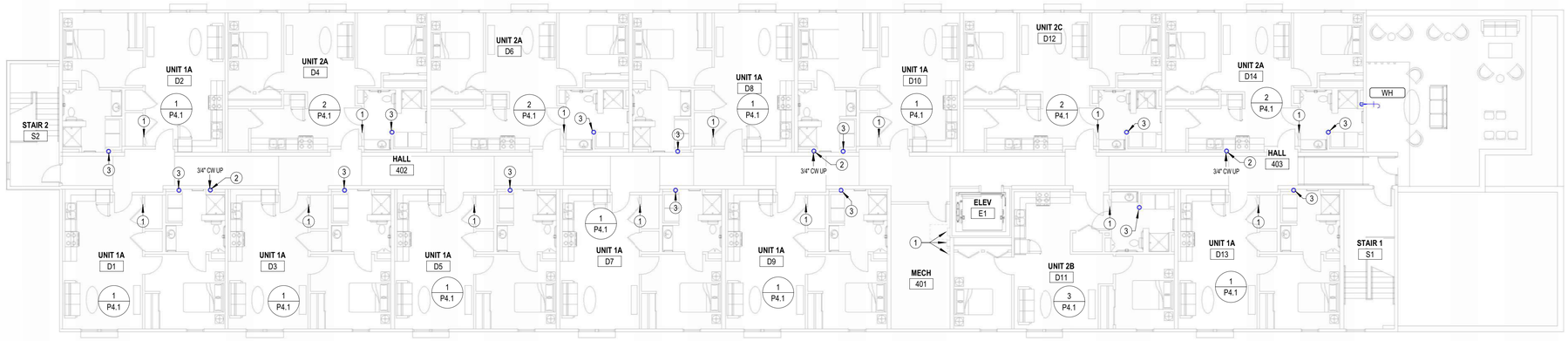

PIPING FOR DWELLING UNITS ON 2ND AND 4TH FLOORS SHALL BE ROUTED BELOW THE FLOOR. DO NOT DOMESTIC WATER PIPING IN THE ATTIC

2 P1.5 FOURTH FLOOR DOMESTIC WATER PLAN
3/32" = 1'-0"
0 8' 16' 24'

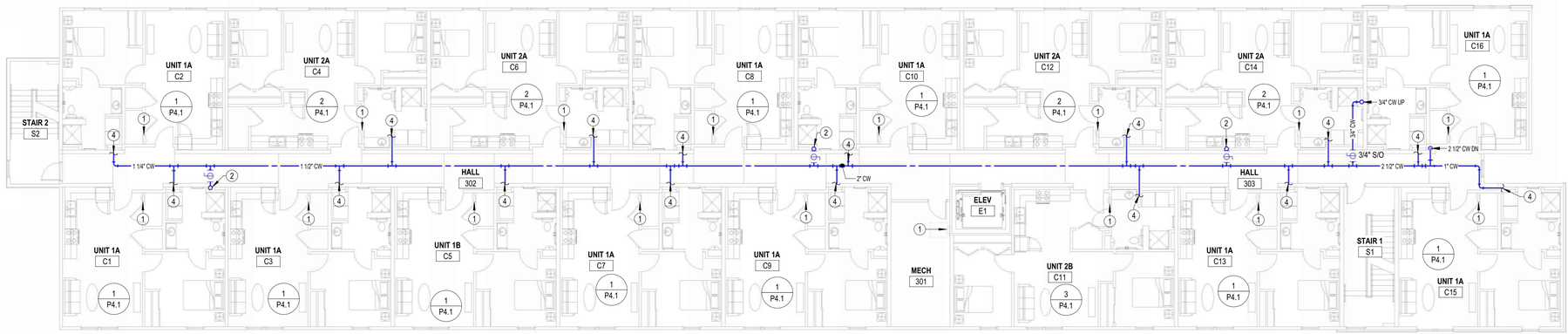

PIPING FOR DWELLING UNITS ON 2ND AND 4TH FLOORS SHALL BE ROUTED BELOW THE FLOOR. DO NOT DOMESTIC WATER PIPING IN THE ATTIC

1 P1.5 THIRD FLOOR DOMESTIC WATER PLAN
3/32" = 1'-0"
0 8' 16' 24'

SEE SHEET P4.1 FOR PLUMBING FIXTURE TAGS

NOTES BY SYMBOL

1. ELECTRICAL EQUIPMENT SHOWN FOR COORDINATION. DO NOT ROUTE PIPING ABOVE OR BELOW EQUIPMENT, AND MAINTAIN WORKING CLEARANCE SHOWN.
2. 3/4" COLD WATER UP TO ROOF HYDRANT.
3. 1" DOMESTIC WATER FROM FLOOR BELOW, SEE ENLARGED DOMESTIC WATER PLANS FOR MORE INFORMATION.
4. SEE ENLARGED DOMESTIC WATER PLANS FOR CONTINUATION.

LST Consulting Engineers, PA
Manhattan, Kansas
785.587.8042

Wichita, Kansas
316.285.0696

www.LSTengineers.com
mail@LSTengineers.com
Project 24061

JonesGillamRenz
730 N. Ninth 1881 Main Street, Suite 301
Salina, KS 67401 Kansas City, MO 64108
785.827.0386 jgr@jgrarchitects.com

THE RESIDENCE AT HERATIGE WEST

NEW SENIOR LIVING FACILITY

ANDOVER, KANSAS

RYAN PATRICK LIES LICENSED 24155 KANSAS PROFESSIONAL ENGINEER 2025.01.10 16:46:35-06'00'

REVISIONS:

DATE: 01-10-2025
JOB: 24-3379
SHEET NO.:

P1.5

COPYRIGHTED ©

Wichita-Sedgwick County
Metropolitan Area Building
and Construction Department

REVIEWED FOR CODE COMPLIANCE

CORRECTIONS OR COMMENTS MADE ON THESE DRAWINGS AND THIS DOCUMENT DURING THIS REVIEW DO NOT RELIEVE CONTRACTOR FROM COMPLIANCE WITH ALL REQUIREMENTS OF THE CODE OF THE MABCD, THE CITY OF WICHITA OR SEDGWICK COUNTY. THIS REVIEW IS ONLY FOR GENERAL CONFORMANCE OF THE CODE. THE CONTRACTOR IS RESPONSIBLE FOR CONFORMING AND CORRELATING ALL TECHNIQUES OF CONSTRUCTION. THIS APPROVAL IS SUBJECT TO PROVISIONS OF SECTION 107.4 OF THE 2012 INTERNATIONAL BUILDING CODE.

DATE: 02/19/25 BY: William Jerauld Jr

PIPING FOR DWELLING UNITS ON 2ND AND 4TH FLOORS SHALL BE ROUTED BELOW THE FLOOR. DO NOT DOMESTIC WATER PIPING IN THE ATTIC

NOTES BY SYMBOL

1. PROVIDE 1/2" VALVED BRANCH BELOW SINK AND CONNECT DISHWASHER. ROUTE PIPING ALONG BACK OF CABINETRY, COORDINATE EXACT ROUTING WITH G.C. COORDINATE EXACT REQUIREMENTS WITH DISHWASHER PROVIDED.
2. SEE OVERALL DOMESTIC WATER PLANS FOR CONTINUATION.
3. PROVIDE 1-1/4" DOMESTIC WATER PIPE TO APARTMENTS, PROVIDE WITH 1" TEE UP TO FLOOR ABOVE AND 1" DOWN TO APARTMENT SHUT-OFF VALVE. SEE TYPICAL RISER DIAGRAM S-P4.1.
4. PROVIDE 1" WATER SERVICE TO APARTMENT WITH SHUT-OFF VALVE CONCEALED IN WALL, PROVIDE ACCESS PANELS ON LAUNDRY SIDE OF WALL.
5. HOT WATER RECIRC LOOP SHALL DROP IN WALL TO LIMIT HOT WATER BRANCH TO PUBLIC LAVATORY TO 2 FT MAX.
6. COORDINATE ROUTING OF PIPING IN THIS AREA WITH STRUCTURE. ALL PENETRATIONS OF BEAMS IN THIS AREA MUST BE APPROVED BY STRUCTURAL ENGINEER IN WRITING.

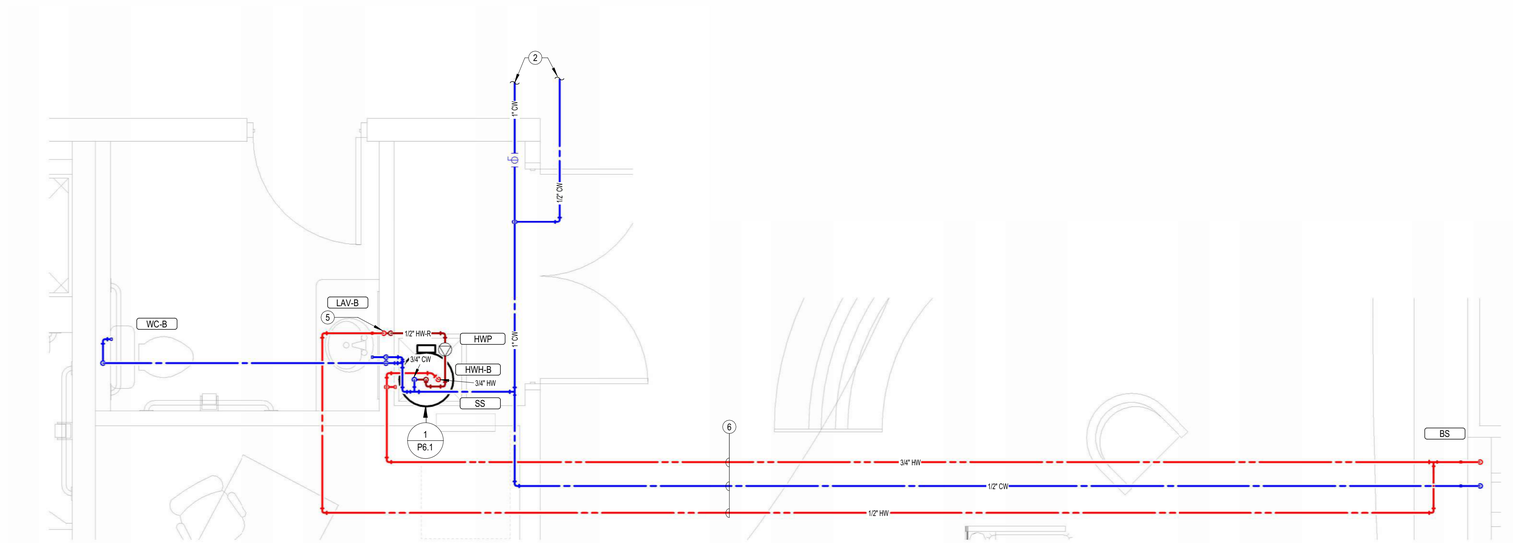

4 P4.1 ENLARGED COMMUNITY ROOM PLUMING
1/2" = 1'-0"
0 1' 2' 4'

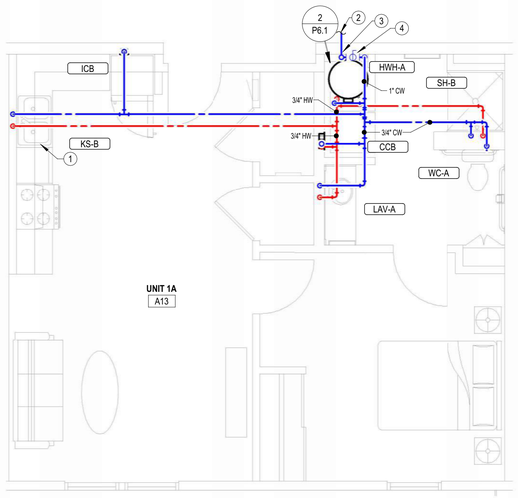

1 P4.1 1 BEDROOM (UNITS 1A/1B) ENLARGED DOMESTIC WATER PLAN
1/4" = 1'-0"
0 2' 4' 8'

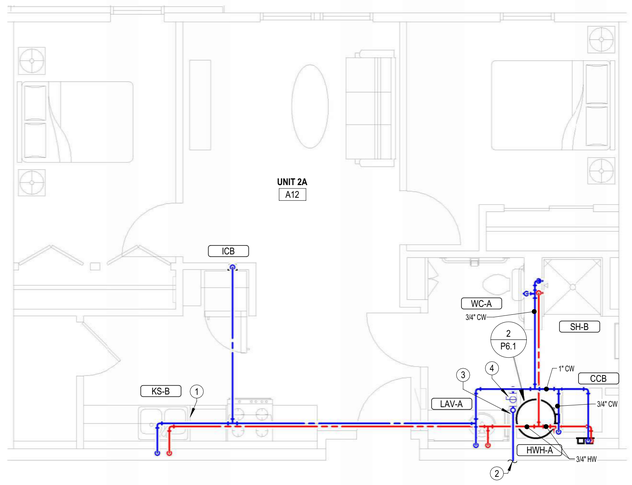

2 P4.1 2 BEDROOM (UNITS 2A/2C) ENLARGED DOMESTIC WATER PLAN
1/4" = 1'-0"
0 2' 4' 8'

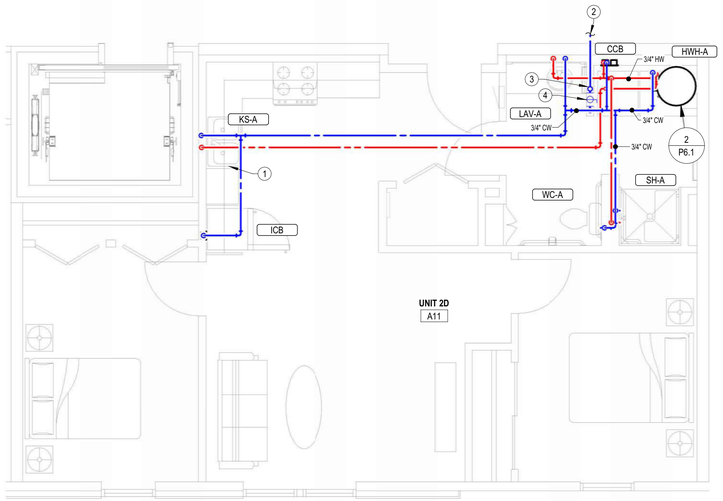

3 P4.1 2 BEDROOM (UNITS 2B/2D) ENLARGED DOMESTIC WATER PLAN
1/4" = 1'-0"
0 2' 4' 8'

LST Consulting Engineers, PA
Manhattan, Kansas
785.587.8042

Wichita, Kansas
316.285.0696

www.LSTengineers.com
mail@LSTengineers.com
Project 24061

JonesGillamRenz
730 N. Ninth 1881 Main Street, Suite 301
Salina, KS 67401 Kansas City, MO 64108
785.827.0386 jgr@jgrarchitects.com

THE RESIDENCE AT HERATIGE WEST
NEW SENIOR LIVING FACILITY
ANDOVER, KANSAS

RYAN PATRICK LIPS
LICENSED
24155
KANSAS
PROFESSIONAL ENGINEER
16:46:59-06'00'

REVISIONS:

DATE: 01-10-2025
JOB: 24-3379
SHEET NO.:

P4.1

COPYRIGHTED ©

Wichita-Sedgwick County
Metropolitan Area Building
and Construction Department

REVIEWED FOR CODE COMPLIANCE

CORRECTIONS OR COMMENTS MADE ON THESE DRAWINGS AND THIS DOCUMENT DURING THIS REVIEW DO NOT RELIEVE CONTRACTOR FROM COMPLIANCE WITH ALL REQUIREMENTS OF THE CODE OF THE MABCD, THE CITY OF WICHITA OR SEDGWICK COUNTY. THIS REVIEW IS ONLY FOR GENERAL CONFORMANCE OF THE CODE. THE CONTRACTOR IS RESPONSIBLE FOR CONFORMING AND CORRELATING ALL TECHNIQUES OF CONSTRUCTION. THIS APPROVAL IS SUBJECT TO PROVISIONS OF SECTION 107.4 OF THE 2012 INTERNATIONAL BUILDING CODE.

DATE: 02/19/25 BY: William Jerauld Jr

Domestic Water Equipment Schedule

Mark	Manufacturer	Model	Specification	Notes
HWH-A	AO Smith	ENJ-40	40 Gallon electric water heater, 0.93 UEF, 4500 watts, 208v heating element, 21 GPH recovery @ 90°F temp rise. Supplied with temperature and pressure relief valve and brass drain valve. Water heater shall have temperature controls set to limit supply temperature to 120°F or less.	1
HWH-B	AO Smith	EJCS-20	20 Gallon electric water heater, 2500 watts, 120v heating element, 11 GPH recovery @ 90°F temp rise. Supplied with temperature and pressure relief valve and brass drain valve. Water heater shall have temperature controls set to limit supply temperature to 120°F or less.	1
HWP	Bell & Gossett	ECOCIRC e3-4V	Circulation pump, bronze body, 10 GPM @ 10' head, 120 VAC. Provide clamp-on aquastat for pump control.	2

GENERAL:
- Provide fixtures with all trim necesary for complete installation.

NOTES:
1. Provide wall hung platform for water heater equal to Holdrite #60SWHP-W. Coordinate exact location and mounting with height with architect.
2. Pump shall have controls to prevent startup within 5 minutes from the end of the previous heating cycle. hot water recirculation system shall meet all requirements of 2018 IECC.

PLUMBING FIXTURE SCHEDULE

MARK	MANUFACTURER	MODEL	PRODUCT DESCRIPTION	TRIM	ROUGH-IN SIZES			COLD	HOT	ADA COMPLIANT	NOTES
					DRAIN	VENT	WATER				
BS	Blanco	524755	17"W x 17" Single compartment, under mount, stainless steel satin polish sink.	Delta / 19802Z-SP-DST / Spot Shield Stainless	2"	1 1/2"	1/2"	Yes	Yes	Yes	1,2,3,5
CCB	IPS Corp.	W4700	Washing machine box with 2" PVC/ABS drain coupling and knockout test cap. Two 1/4 turn adaptor ball valves, sweat connection.		2"	1 1/2"	1/2"	Yes	Yes		
EWC	Elkay	EMABFTLDDWSLK	Dual height, self-contained water cooler with stainless steel basin, front and side push bar actuator, lead-free, 120v. Provide with EZH2O bottle filling station, and model 98313C accessory apron.		2"	1 1/2"	1/2"	Yes	No	Yes	1
FD	Sioux Chief	833	Adjustable floor drain with nickel bronze strainer. Provide Proset Trapgaurd trap protection device.		2"	2"					
FS	Sioux Chief	861	PVC floor sink wiht PVC strainer. Provide Proset Trapgaurd trap protection device.		4"	2"					
ICB	IPS Corp.	FRIB12	Ice maker connection box with 1/4 turn ball valve and 1/2" sweat copper connection.				1/2"	Yes	No		
KS-A	Just	DLADA1829A65-J	Two compartment 20 GA stainless steel sink, self rimming, 14"x16"x"D inside, fully undercoated, faucet holes as required. Single handle kitchen sink facuet with hose spray, and basket strainer. IN-SINKERATOR: "Badger 5" garbage disposal, 1/2hp, 120V cord and plug connected.	Delta / 19802Z-SP-DST / Spot Shield Stainless	2"	1 1/2"	1/2"	Yes	Yes	No	1,2,3,4,5
KS-B	Just	DLADA1829A65-J	Two compartment 20 GA stainless steel sink, self rimming, 14"x16"x8"D inside, fully undercoated, faucet holes as required. Single handle kitchen sink facuet with hose spray, and basket strainer. IN-SINKERATOR: "Badger 5" garbage disposal, 1/2hp, 120V cord and plug connected.	Delta / 19802Z-SP-DST / Spot Shield Stainless	2"	1 1/2"	1/2"	Yes	Yes	No	1,2,3,4,5
LAV-A	American Standard	0610.000.020	20"Wx16" Under mount, vitreous china lavatory. Single handled 1.2 GPM faucet. Provide with pop-drain, and front overflow drain.	Delta / 559HAR-SS-DST / Brilliance Stainless	2"	1 1/2"	1/2"	Yes	Yes	Yes	1,2,3,5
LAV-B	American Standard	0610.000.020	20"Wx16" Under mount, vitreous china lavatory. Single handled 1.2 GPM faucet. Provide with pop-drain, and front overflow drain.	Delta / 559HAR-BL-DST / Matte Black	2"	1 1/2"	1/2"	Yes	Yes	Yes	1,2,3,5
OD	MIFAB	R1200-W	Deep Sump Roof Drain With 15" Diameter Anchor Flange, 2" High Cast Iron External Combined Water Dam And Waterproofing Membrane Clamp Ring, And Standard Self-Locking Dome Strainer With A Free Area Of 125 Square Inches.		3"						
RD	MIFAB	R1200-W	Deep Sump Roof Drain With 15" Diameter Anchor Flange, 2" High Cast Iron External Combined Water Dam And Waterproofing Membrane Clamp Ring, And Standard Self-Locking Dome Strainer With A Free Area Of 125 Square Inches.		3"						
RH	Woodford	RHY2-MS	Frost proof roof hydrant with ASSE 1052 double check backflow preventer that is field testable, integral vent that allows drainage with 1/8" drain hole drilled and tapped in body of hydrant. Provide with manufacturer's roof mounting system consisting of cast iron hydrant support, under deck flange, well seal, EPDM boot, and shims as required. Coordinate installation with G.C.		1/2"		3/4"	Yes	No	No	6
SH-A	Aqua Bath Co.	C4136BF-OT-FUS 3/4"	Center drain option, reinforced fiberglass ADA roll-in shower, 36"Wx36"Dx80"H with integral soap/toiletry shelves and grab bars in accordance with ADA requirements, fold-up seat, right or left hand rough-in as required, white finish. Provide with collapsible dam. Entire assembly shall have nickel finish. Max 2.0 GPM	Kohler / K-8304-KS pressure balancing valve with integral temperature limits and stops / K-TS10583-4 valve trim / K-22173 wall supply elbow / K-9514 60" hose / K-22163 hand shower / K-8524 and K-349 slide bar.	2"	1 1/2"	1/2"	Yes	Yes	Yes	1
SH-B	Aqua Bath Co.	C4136BF-OT-FUS 3/4"	Center drain option, reinforced fiberglass ADA base model shower, 36"Wx36"Dx80"H with integral soap/toiletry shelves in accordance with ADA requirements, right or left hand rough-in as required, white finish. Provide with collapsible dam and blocking for grab bars and seat to be added at tenant's request. Entire assembly shall have nickel finish. Max 2.0 GPM.	Kohler / K-8304-KS pressure balancing valve with integral temperature limits and stops / K-TS10583-4 valve trim	2"	1 1/2"	1/2"	Yes	Yes	No	
SS	Fiat	MSB-2424	One piece molded stone mop basin, 24" square, stainless steel integral drain body with caulk connection, stainless steel wall gaurds. Faucet with hose thread outlet, vacuum breaker, pail hook, wall brace, and metal lever handels.	Delta / 28T9	3"	1 1/2"	3/4"	Yes	Yes	No	4
WC-A	Kohler	5296 Highline	Two piece, 12" rough-in, elongated 16-1/2" high bowl, siphon jet flushing action, actuator located on open side of room. Elongated closed front seat and cover. Provide with 1/4" brass ball valve at wall connection.	Kohler / K-5588	4"	2"	1/2"	Yes	No	No	1
WC-B	Kohler	5296 Highline	Two piece, 12" rough-in, elongated 16-1/2" high bowl, siphon jet flushing action, actuator located on open side of room. Elongated closed front seat. Provide with 1/4" brass ball valve at wall connection.	Kohler / K-5588	4"	2"	1/2"	Yes	No	Yes	1
WH	WOODFORD	B25	Frost proof wall hydrant with anti-siphon vacuum breaker, with metal handle.				3/4"	Yes	No	No	

GENERAL:
- Provide fixtures with all trim necesary for complete installation.
- All toilets, lavatory faucets, showerheads, and kitchen faucets shall have EPA's WaterSense label.

NOTES:
1. In areas open to the public, fixture and installation to meet requirements of Americans with Disabilities Act. In apartments, fixture and installation to meet requirements of the Fair Housing Act.
2. Provide Dearborn supplies with stops and escutcheon plate, 1-1/4" cast brass p-trap.
3. Insulate water and waste piping below sink. Utilize insulation kit equivalent to LavGuard by Truebro. Provide Plumberex model #30711WD-N waste disposal cover.
4. Trim shall be provided with polished chrome finish.
5. Fixture selected by interior designer. Verify finish and selections with interior designer.
6. Transition from 1/8" drain tubing to 1/2" PVC drain and terminate with ar gap at nearest tenant floor drain.

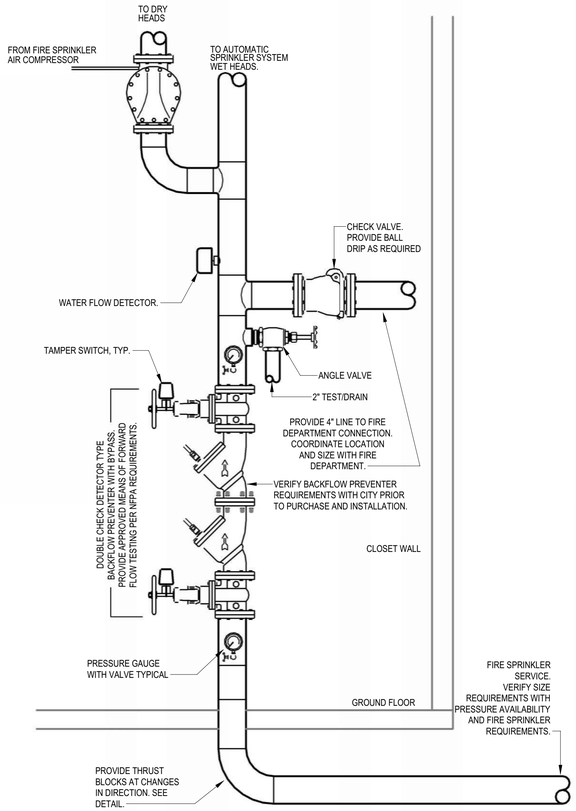

4 P6.1 FIRE PROTECTION RISER DIAGRAM
NO SCALE

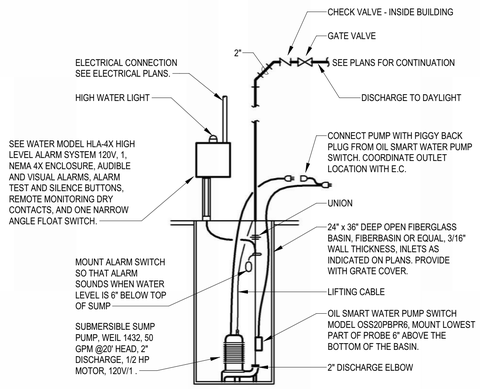

3 P6.1 ELEVATOR SUMP PUMP
NO SCALE

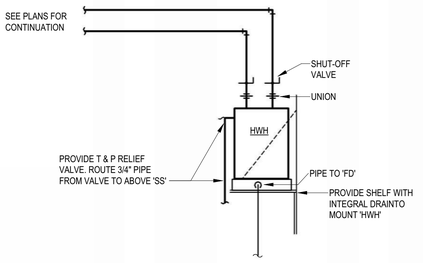

2 P6.1 APPARTMENT WATER HEATER DIAGRAM
NO SCALE

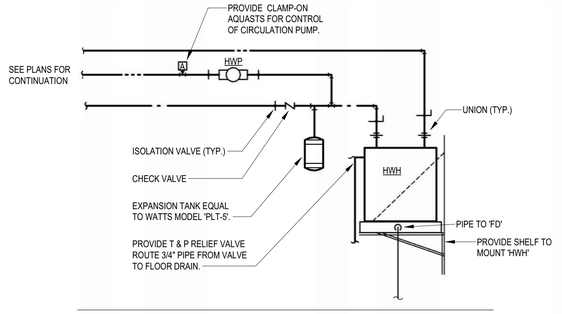

1 P6.1 WATER HEATER ON SHELF PIPING DIAGRAM
NO SCALE

LST Consulting Engineers, PA
Manhattan, Kansas
785.587.8042

Wichita, Kansas
316.285.0696

www.LSTengineers.com
mail@LSTengineers.com
Project 24061

JonesGillamRenz
730 N. Ninth
Salina, KS 67401
785.827.0386
1881 Main Street, Suite 301
Kansas City, MO 64108
jgr@jgrarchitects.com

THE RESIDENCE AT HERATIGE WEST
NEW SENIOR LIVING FACILITY
ANDOVER, KANSAS

RYAN PATRICK LIEB
LICENSED
24155
KANSAS
PROFESSIONAL ENGINEER
2025.01.10 16:47:19-06'00'

REVISIONS:

DATE: 01-10-2025
JOB: 24-3379
SHEET NO.:

P6.1

COPYRIGHTED ©

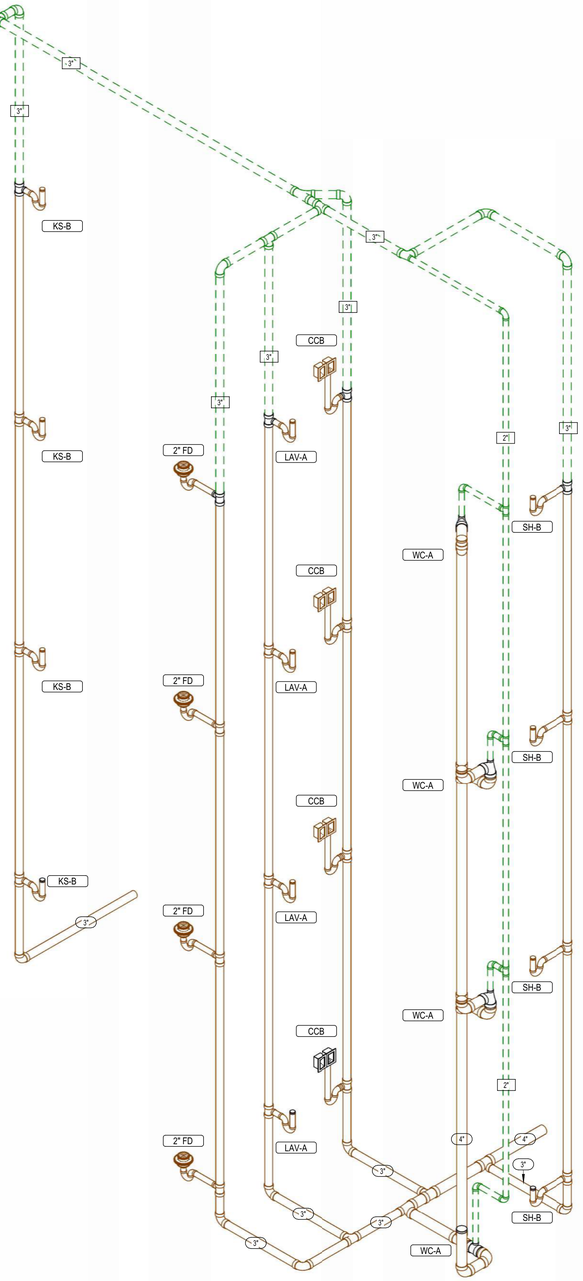

1 P9.1 TYPICAL ONE BEDROOM 1A/1B WASTE AND VENT RISER

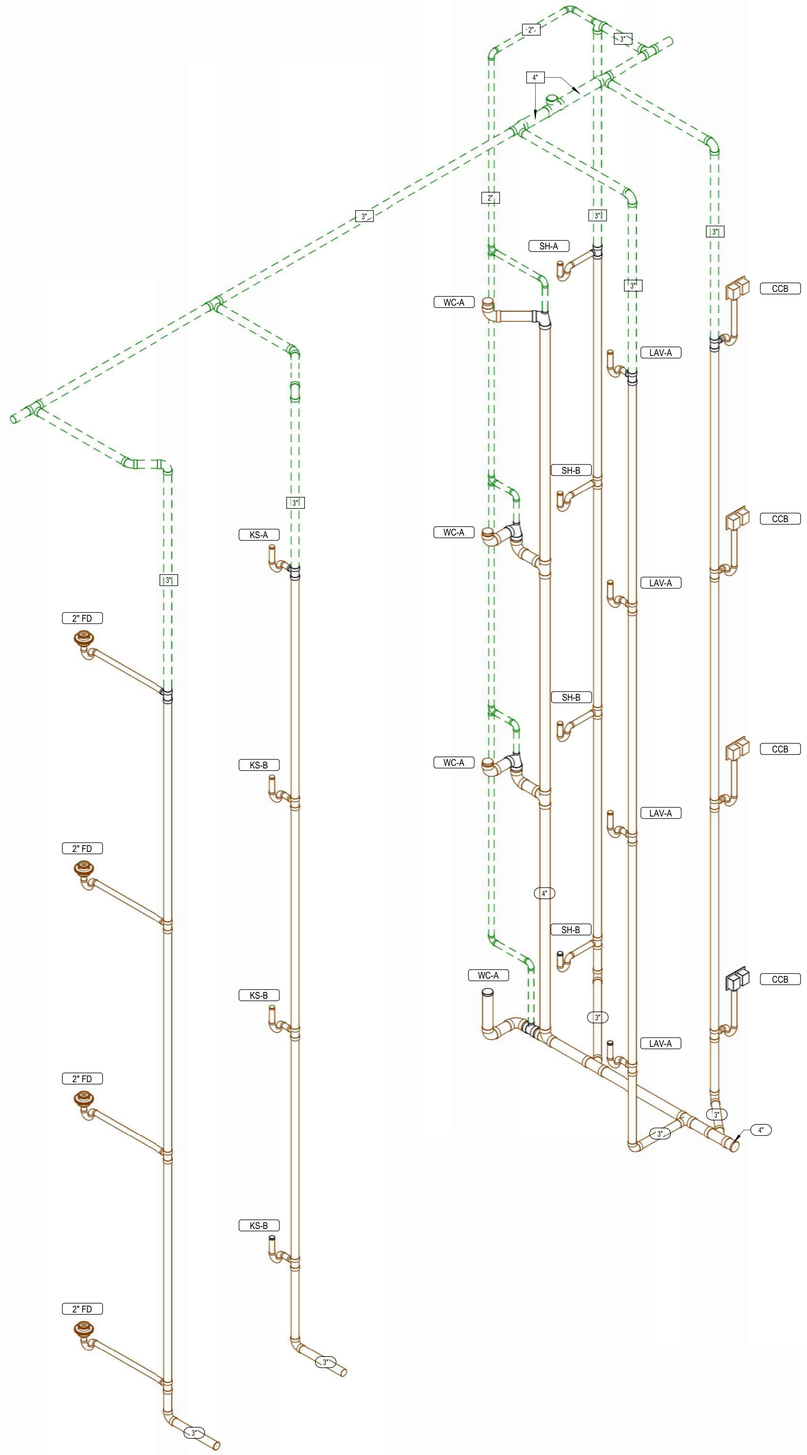

2 P9.1 TYPICAL TWO BEDROOM 2A/2C WASTE AND VENT RISER

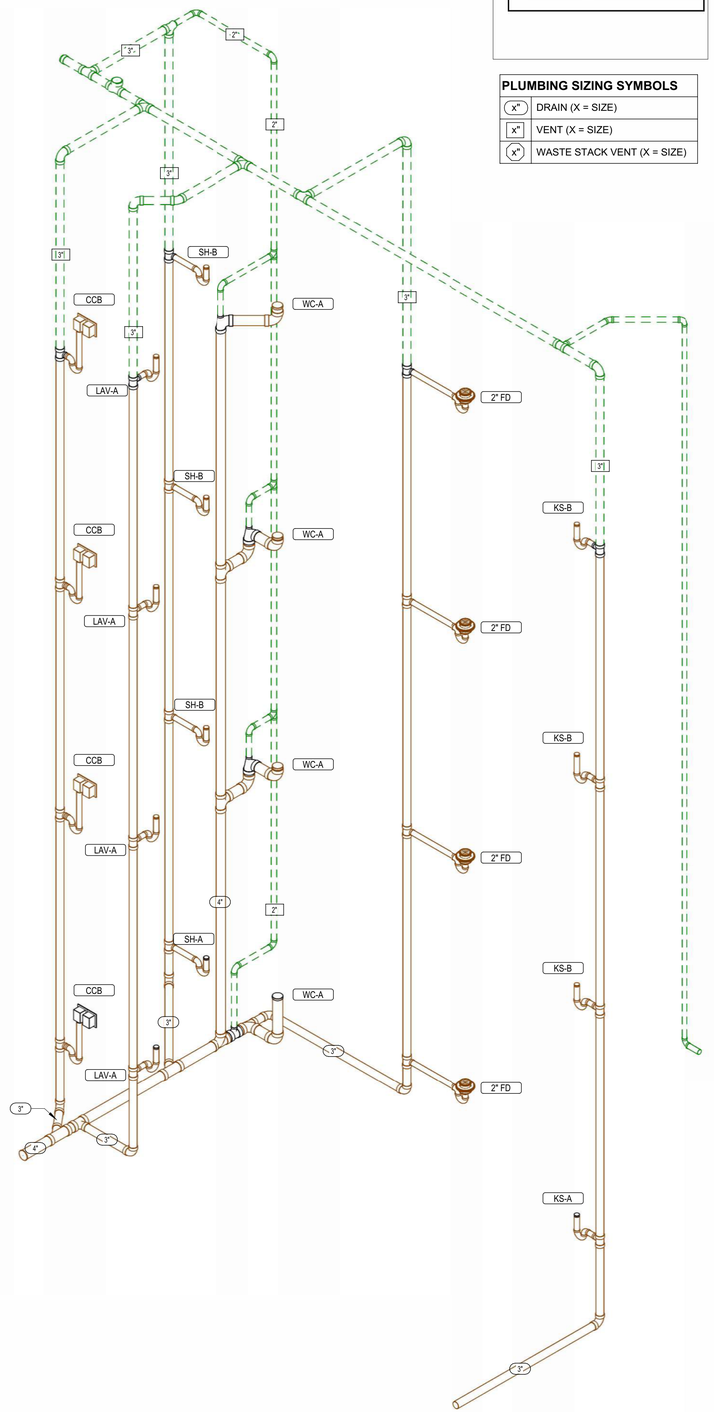

4 P9.1 TYPICAL TWO BEDROOM 2B/2D WASTE AND VENT RISER

Wichita-Sedgwick County
Metropolitan Area Building
and Construction Department

REVIEWED FOR CODE COMPLIANCE

CORRECTIONS OR COMMENTS MADE ON THESE DRAWINGS AND THIS DOCUMENT DURING THIS REVIEW DO NOT RELIEVE CONTRACTOR FROM COMPLIANCE WITH ALL REQUIREMENTS OF THE CODE OF THE MABCD, THE CITY OF WICHITA OR SEDGWICK COUNTY. THIS REVIEW IS ONLY FOR GENERAL CONFORMANCE OF THE CODE. THE CONTRACTOR IS RESPONSIBLE FOR CONFORMING AND CORRELATING ALL TECHNIQUES OF CONSTRUCTION. THIS APPROVAL IS SUBJECT TO PROVISIONS OF SECTION 107.4 OF THE 2012 INTERNATIONAL BUILDING CODE.

DATE: 02/19/25 BY: William Jerauld Jr

PLUMBING SIZING SYMBOLS	
(X")	DRAIN (X = SIZE)
X"	VENT (X = SIZE)
(X")	WASTE STACK VENT (X = SIZE)

LST Consulting Engineers, PA
Manhattan, Kansas
785.587.8042

Wichita, Kansas
316.285.0696

www.LSTengineers.com
mail@LSTengineers.com
Project 24061

JonesGillamRenz
730 N. Ninth
Salina, KS 67401
785.827.0386
1881 Main Street, Suite 301
Kansas City, MO 64108
jgr@jgrarchitects.com

THE RESIDENCE AT HERATIGE WEST

NEW SENIOR LIVING FACILITY

ANDOVER, KANSAS

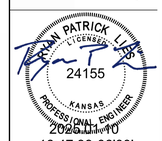

REVISIONS:

DATE: 01-10-2025
JOB: 24-3379
SHEET NO.:

P9.1

© COPYRIGHTED

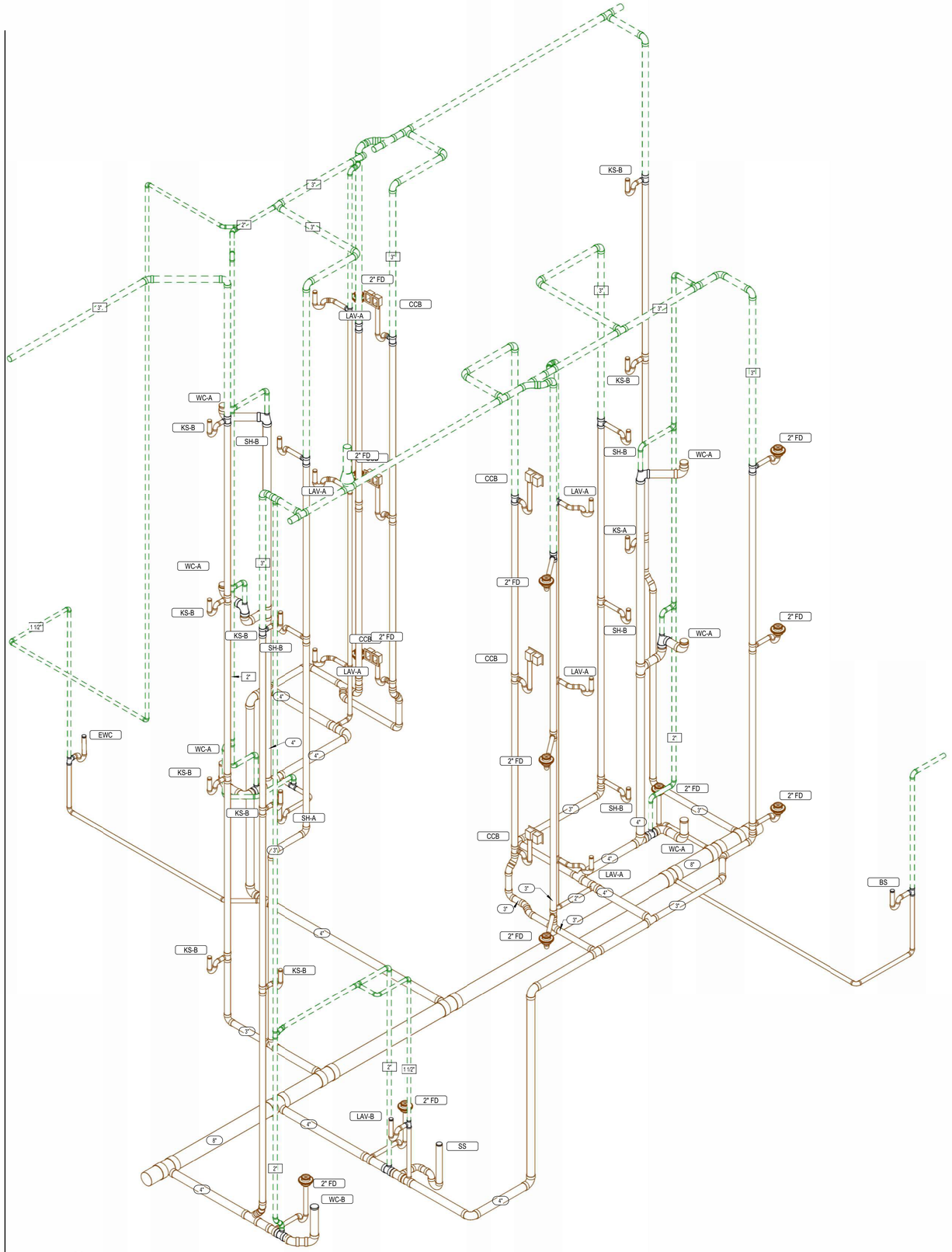

1 P9.2 COMMON AREA WASTE AND VENT RISER

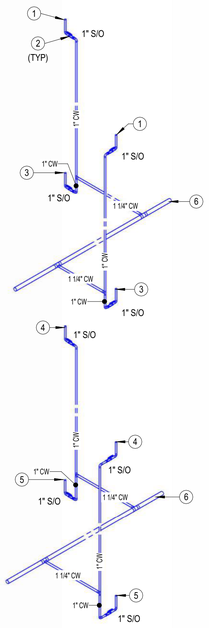

3 P9.2 TYPICAL APARTMENT DOMESTIC WATER SERVICE RISER DIAGRAM

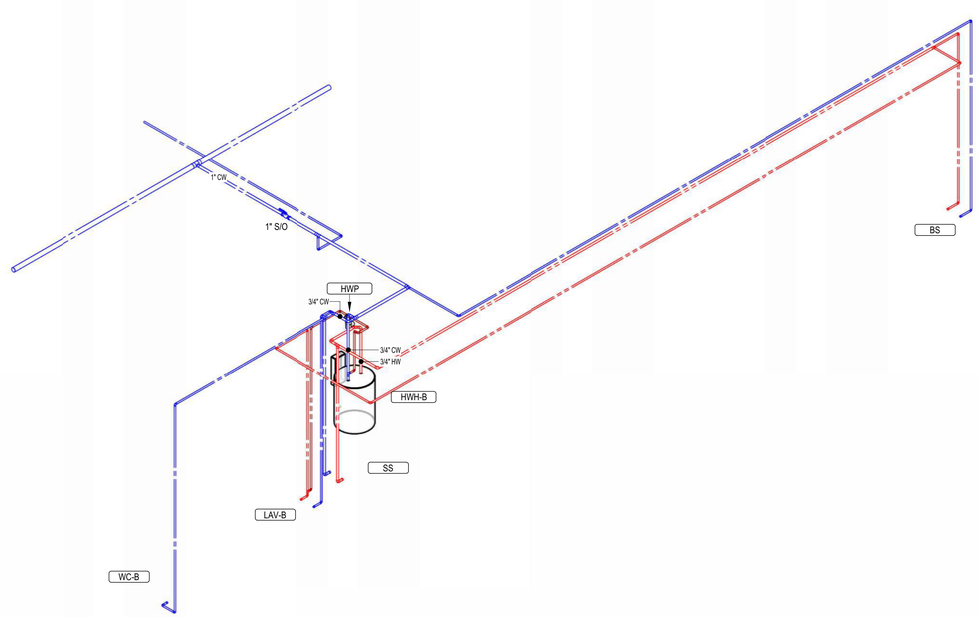

2 P9.2 COMMON AREA DOMESTIC WATER RISER

Wichita-Sedgwick County
Metropolitan Area Building
and Construction Department

REVIEWED FOR CODE COMPLIANCE

CORRECTIONS OR COMMENTS MADE ON THESE DRAWINGS AND THIS DOCUMENT DURING THIS REVIEW DO NOT RELIEVE CONTRACTOR FROM COMPLIANCE WITH ALL REQUIREMENTS OF THE CODE OF THE MABCD, THE CITY OF WICHITA OR SEDGWICK COUNTY. THIS REVIEW IS ONLY FOR GENERAL CONFORMANCE OF THE CODE. THE CONTRACTOR IS RESPONSIBLE FOR CONFORMING AND CORRELATING ALL TECHNIQUES OF CONSTRUCTION. THIS APPROVAL IS SUBJECT TO PROVISIONS OF SECTION 107.4 OF THE 2012 INTERNATIONAL BUILDING CODE.

DATE: 02/19/25 BY: William Jerauld Jr

PLUMBING SIZING SYMBOLS	
x"	DRAIN (X = SIZE)
x"	VENT (X = SIZE)
x"	WASTE STACK VENT (X = SIZE)

NOTES BY SYMBOL

1. DOMESTIC WATER SERVICE TO 4TH FLOOR DWELLING UNIT. SEE P4.1 FOR CONTINUATION.
2. INSTALL SHUT OFF VALVE IN ACCESSIBLE LOCATION. PROVIDE ACCESS PANELS AS REQUIRED.
3. DOMESTIC WATER SERVICE TO 3RD FLOOR DWELLING UNIT. SEE P4.1 FOR CONTINUATION.
4. DOMESTIC WATER SERVICE TO 2ND FLOOR DWELLING UNIT. SEE P4.1 FOR CONTINUATION.
5. DOMESTIC WATER SERVICE TO 1ST FLOOR DWELLING UNIT. SEE P4.1 FOR CONTINUATION.
6. SEE OVERALL PLANS FOR SIZE AND ROUTING OF PLUMBING MAINS.

LST Consulting Engineers, PA
Manhattan, Kansas
785.587.8042

Wichita, Kansas
316.285.0696

www.LSTengineers.com
mail@LSTengineers.com
Project 24061

JonesGillamRenz
730 N. Ninth
Salina, KS 67401
785.827.0386
1881 Main Street, Suite 301
Kansas City, MO 64108
jgr@jgrarchitects.com

THE RESIDENCE AT HERATIGE WEST

NEW SENIOR LIVING FACILITY

ANDOVER, KANSAS

RYAN PATRICK LIPP LICENSED 24155 KANSAS PROFESSIONAL ENGINEER
2025.10.16 16:47:57-06'00'

REVISIONS:

DATE: 01-10-2025
JOB: 24-3379
SHEET NO.:

P9.2

COPYRIGHTED ©