LST Consulting Engineers, PA
MANHATTAN
4809 Vue Du Lac Place, Suite 201
Manhattan, KS 66503
785.587.8042
WICHITA
125 S. Washington, Suite 150
Wichita, KS 67202
316.285.0696
www.LSTengineers.com
mail@LSTengineers.com

Project 25039

8-1-2025

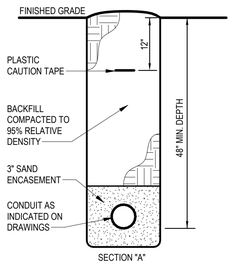

4 CONDUIT TRENCH SECTION A
NO SCALE

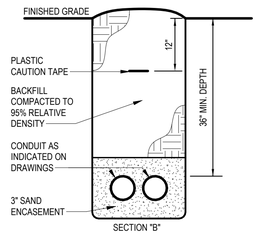

5 CONDUIT TRENCH SECTION B
NO SCALE

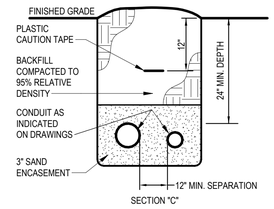

6 CONDUIT TRENCH SECTION C
NO SCALE

NOTES BY SYMBOL

1. ELECTRIC SERVICE EQUIPMENT, SEE RISER DIAGRAM ON SHEET E6.2.
2. POWER COMPANY PROVIDED PAD MOUNTED UTILITY TRANSFORMER. CONCRETE PAD BY GENERAL CONTRACTOR. COORDINATE EXACT LOCATION AND REQUIREMENTS WITH POWER UTILITY COMPANY PRIOR TO COMMENCING WORK.
3. METER CENTER SERVICE LATERAL. COORDINATE ROUTING WITH LOCAL POWER COMPANY. SEE 1:E1.2 FOR MORE INFORMATION.
4. HOUSE SERVICE LATERAL. COORDINATE ROUTING WITH LOCAL POWER COMPANY. SEE 1:E1.2 FOR MORE INFORMATION.
5. (2) 4" CONDUITS BELOW GRADE FOR COMMUNICATIONS SERVICES. PROVIDE PULLSTRING IN EACH RACEWAY. VERIFY EXACT REQUIREMENTS AND TERMINATION POINT AT PROPERTY LINE WITH LOCAL COMMUNICATIONS ACCESS PROVIDER.
6. SANITARY SEWER, SEE CIVIL DRAWINGS FOR CONTINUATION.
7. DOMESTIC WATER SERVICE, SEE CIVIL DRAWINGS FOR CONTINUATION.
8. FIRE SUPPRESSION SERVICE, SEE CIVIL DRAWINGS FOR CONTINUATION.

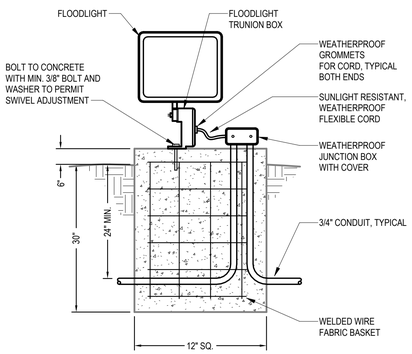

3 GROUND LIGHT DETAIL
NO SCALE

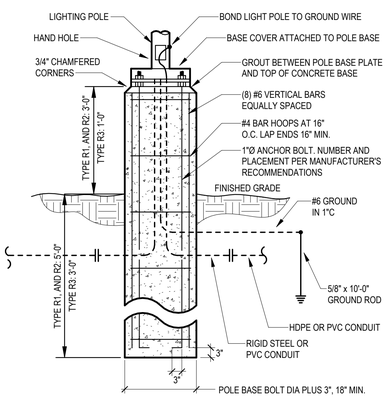

2 LIGHT POLE BASE DETAIL
NO SCALE

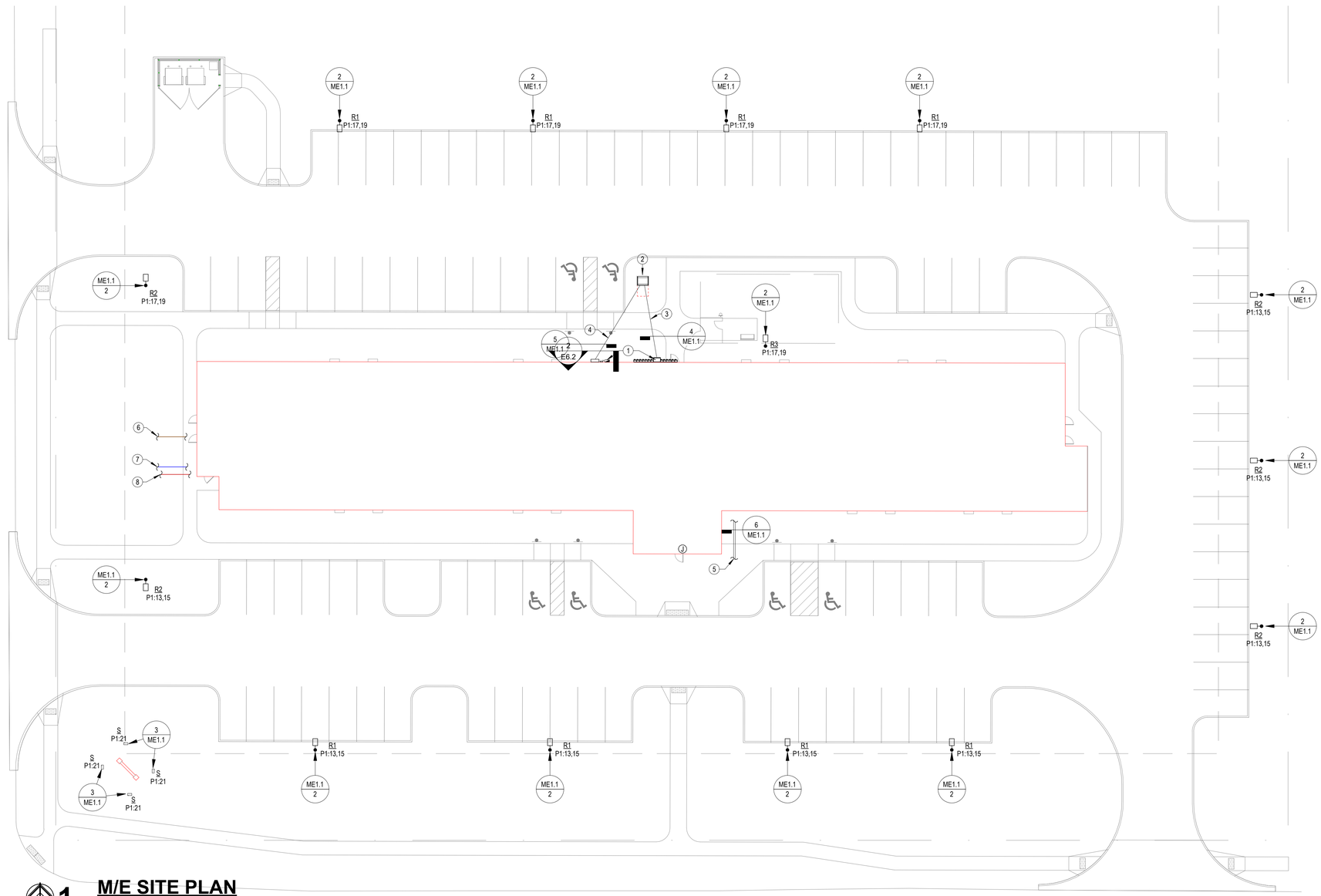

1 M/E SITE PLAN
1" = 20'-0"

JonesGillamRenz
730 N. Ninth
Salina, KS 67401
785.827.0386
1881 Main Street, Suite 301
Kansas City, MO 64108
jgr@jgrarchitects.com

THE RESIDENCE AT CARTER LAKE
NEW SENIOR LIVING FACILITY
CARTER LAKE, IOWA

LICENSED PROFESSIONAL ENGINEER
TIMOTHY C. TREDWAY
21578
IOWA
08/01/2025

REVISIONS:

DATE: 8-1-2025
JOB: 25-3489
SHEET NO.:

ME1.1

COPYRIGHTED ©

LST Consulting Engineers, PA
MANHATTAN
4809 Vue Du Lac Place, Suite 201
Manhattan, KS 66503
785.587.8042
WICHITA
125 S. Washington, Suite 150
Wichita, KS 67202
316.285.0696
www.LSTengineers.com
mail@LSTengineers.com

Project 25039 **8-1-2025**

NOTES BY SYMBOL

1. ALL HEAT PUMPS, UNLESS NOTED OTHERWISE, ARE 'HP-1' AND CORRESPOND TO MATCHING BLOWER COIL FOR DWELLING UNIT AS TAGGED. TYPICAL
2. PROVIDE 30A/2-POLE, NON-FUSED DISCONNECT SWITCH IN NEMA 3R ENCLOSURE AND MAKE FINAL CONNECTION TO EQUIPMENT IN LFMC RACEWAY. MOUNT TO UNISTRUT FRAME SUPPORTED FROM EQUIPMENT SUPPORT RAILS.
3. MOUNT RECEPTACLE TO UNISTRUT FRAME SUPPORTED FROM HEAT PUMP UNISTRUT FRAME.
4. ROUTE REFRIGERANT PIPING DOWN THROUGH ROOF TO MATCHING BLOWER COIL. PROVIDE PIPING PENETRATION ASSEMBLY EQUAL TO RPH AW SERIES ROOF VAULT WITH EXIT SEALS FOR REFRIGERANT PIPING AND ELECTRICAL CONDUIT AND TWO ADDITIONAL SPARE EXIT SEALS. SUBMIT PRODUCT DATA FOR REVIEW PRIOR TO INSTALLATION.
5. MOUNT HEAT PUMP TO UNISTRUT FRAME SUPPORTED ON NVENT CADDY PYRAMID ROOF SUPPORTS. PROVIDE VIBRATION ISOLATOR BETWEEN ROOF SUPPORTS AND UNISTRUT FRAME. COORDINATE INSTALLATION WITH ROOFING CONTRACTOR. TYPICAL.
6. PROVIDE RECEPTACLE ON ROOF FOR FUTURE RADON FAN. COORDINATE EXACT LOCATION PRIOR TO COMMENCING WORK. COORDINATE ROOF PENETRATIONS WITH ROOFING CONTRACTOR AND G.C.
7. PROVIDE GRAVITY ROOF VENTILATOR WITH BIRD SCREEN EQUAL TO GREENHECK GRSI-12. MINIMUM 0.82 SQUARE FOOT THROAT AREA. PROVIDE WITH ROOF CURB COMPATIBLE WITH ROOF SLOPE AND MATERIAL.

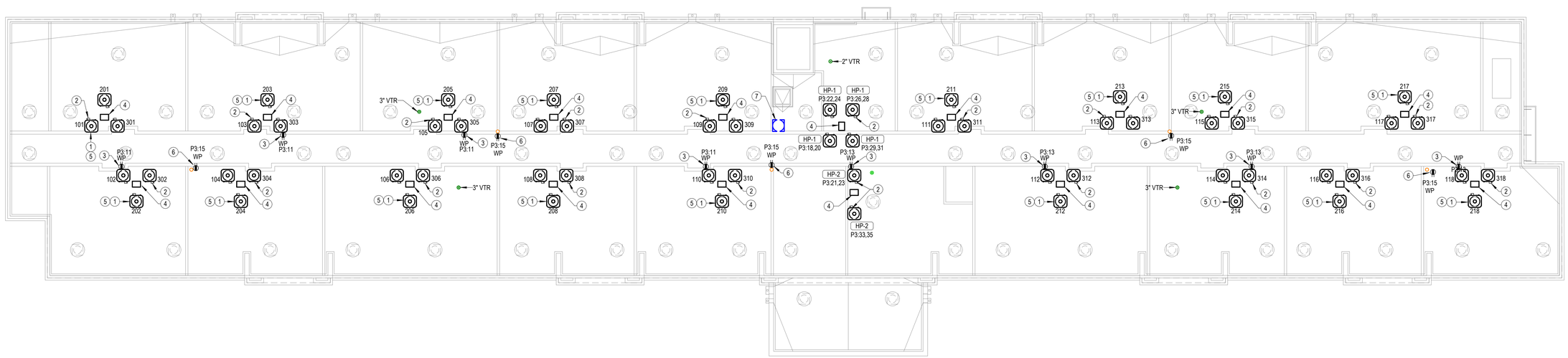

1 M/E ROOF PLAN

3/32" = 1'-0"

JonesGillamRenz
730 N. Ninth
Salina, KS 67401
785.827.0386
1881 Main Street, Suite 301
Kansas City, MO 64108
jgr@jgrarchitects.com

THE RESIDENCE AT CARTER LAKE

NEW SENIOR LIVING FACILITY

CARTER LAKE, IOWA

LICENSED PROFESSIONAL ENGINEER
TIMOTHY C. TREADWAY
21578
IOWA
08/01/2025

REVISIONS:

DATE: 8-1-2025
JOB: 25-3489
SHEET NO.:

ME1.2

COPYRIGHTED ©

Electrical Abbreviations

1P	1 Pole (2P, 3P, 4P, ETC.)
A, Amp	Ampere
AC	Above Counter
ACLG	Above Ceiling
ADO	Automatic Door Opener
AF	Amp Frame
AFF	Above Finished Floor
AFG	Above Finished Grade
AFI	Arc Fault Circuit Interrupter
AHU	Air Handling Unit
AL	Aluminum
ALT	Alternate
AMP	Ampere
AMPL	Amplifier
ANNUN	Annunciator
APPROX	Approximately
AQ-STAT	Aquastat
ARCH	Architect, Architectural
AS	Amp Switch
AT	Amp Trip
ATS	Automatic Transfer Switch
AUTO	Automatic
AUX	Auxiliary
AV	Audio Visual
AWG	American Wire Gauge
BATT	Battery
BD	Board
BLDG	Building
BMS	Building Management System
C	Conduit
CAB	Cabinet
CAT	Catalog
CATV	Cable Television
CB	Circuit Breaker
CCTV	Closed Circuit Television
CKT	Circuit
CLG	Ceiling
COMB	Combination
CMPR	Compressor
CONN	Connection
CONST	Construction
CONT	Continuation Or Continuous
CONTR	Contractor
CONV	Convector
CP	Circulating Pump
CRT	Cathode-Ray Tube
CT	Current Transformer
CTR	Center
CU	Copper
DCP	Domestic Water Circulating Pump
DEPT	Department
DET	Detail
DIA	Diameter
DISC	Disconnect
DIST	Distribution
DN	Down
DPR	Damper
DS	Safety Disconnect Switch
DT	Double Throw
DWG	Drawing
EC	Electrical Contractor
ELEC	Electric, Electrical
ELEV	Elevator
ELU	Emergency Lighting Unit
EM	Emergency
EMS	Energy Management System
EMT	Electrical Metallic Tubing
EP	Electric Pneumatic
EQUIP	Equipment
EWC	Electric Water Cooler
EXIST	Existing
EXH	Exhaust
EXP	Explosion Proof
FA	Fire Alarm
FABP	Fire Alarm Booster Power Supply Panel
FACP	Fire Alarm Control Panel
FCU	Fan Coil Unit
FIXT	Fixture
FLR	Floor
FLUOR	Fluorescent
FU	Fuse
FUDS	Fused Safety Disconnect Switch
GA	Gauge
GAL	Gallon
GALV	Galvanized
GC	General Contractor
GEN	Generator
GFI	Ground Fault Circuit Interrupter
GFP	Ground Fault Protector
GND	Ground
GRS	Galvanized Rigid Steel (Conduit)
GYP BD	Gypsum Board
HOA	Hands-Off-Automatic Switch
HORIZ	Horizontal
HP	Horsepower
HPF	High Power Factor
HT	Height
HTG	Heating
HTR	Heater
HV	High Voltage
HVAC	Heating, Ventilating And Air Conditioning
IC	Interrupting Capacity
IG	Isolated Ground
IMC	Intermediate Metal Conduit
INCAND	Incandescent
IR	Infrared
IW	Interlock With
J-BOX	Junction Box
KV	Kilovolt
KVA	Kilovolt-Ampere
KVAR	Kilovolt-Ampere Reactive
KW	Kilowatt
KWH	Kilowatt Hour
LOC	Locate Or Location
LT	Light
LTG	Lighting
LTNG	Lightning
LV	Low Voltage
MAX	Maximum
MAG.S	Magnetic Starter
M/C	Momentary Contact
MC	Mechanical Contractor
MCB	Main Circuit Breaker
MCC	Motor Control Center
MDC	Main Distribution Center
MDP	Main Distribution Panel
MFR	Manufacturer
MFS	Main Fused Disconnect Switch
MH	Manhole
MIC	Microphone
MIN	Minimum
MISC	Miscellaneous
MLO	Main Lugs Only
MMS	Manual Motor Starter
MOA	Multioutlet Assembly
MSP	Motor Starter Panelboard
MSBD	Main Switchboard
MSS	Motor Starter Switch
MT	Mount
MT.C	Empty Conduit
MTS	Manual Transfer Switch
MTR	Motor, Motorized
N.C.	Normally Closed
NEC	National Electrical Code
NEMA	National Electrical Manufacturer's Association
NFDS	Non-Fused Safety Disconnect Switch
NIC	Not In Contract
NL	Night Light
N.O.	Normally Open
NPF	Normal Power Factor
NTS	Not To Scale
OC	On Center
OH	Overhead
OL	Overloads
PA	Public Address
PB	Pull Box Or Pushbutton
PE	Pneumatic Electric
PED	Pedestal
PF	Power Factor
PH	Phase
PIV	Post Indicating Valve
PNL	Panel
PP	Power Pole
PR	Pair
PRI	Primary
PROJ	Projection
PRV	Power Roof Ventilator
PT	Potential Transformer
PVC	Polyvinyl Chloride (Conduit)
PWR	Power
QUAN	Quantity
RCPT	Receptacle
REQD	Required
RM	Room
RSC	Rigid Steel Conduit
RTU	Roof Top Unit
SC	Surface Conduit
SEC	Secondary
SHT	Sheet
SIM	Similar
SLD	Single-Line Diagram
S/N	Solid Neutral
SPEC	Specification
SPKR	Speaker
SP	Spare
SPP	Single-Point Power
SR	Surface Raceway
SS	Stainless Steel
SSW	Selector Switch
S/S	Stop/Start Pushbuttons
STA	Station
STD	Standard
SURF	Surface Mounted
SW	Switch
SWBD	Switchboard
SYM	Symmetrical
SYS	System
TEL	Telephone
TERM	Terminal
TL	Twist Lock
TR	Tamper Resistant
T-STAT	Thermostat
TTC	Telephone Terminal Cabinet
TV	Television
TVTC	Television Terminal Cabinet
TYP	Typical
UC	Under Counter
UE	Underground Electrical
UG	Underground
UH	Unit Heater
UT	Underground Telephone
UTIL	Utility
UV	Ultraviolet
V	Volt
VA	Volt-Amperes
VDT	Video Display Terminal
VERT	Vertical
VFD	Variable Frequency Drive
VOL	Volume
W	Watt
W/	With
WG	Wire Guard
WH	Water Heater
W/O	Without
WP	Weatherproof
XFMR	Transformer
XFR	Transfer
∠	Angle
@	At
▲	Delta
'	Feet
"	Inches
#	Number
Ø	Phase
C	Center Line
P	Plate

Electrical Symbol Legend

Lighting Symbols

Lighting Fixtures, Typical, Rectangular (Various Symbols)

Lighting Fixtures, Typical, Round (Various Symbols)
Center dot indicates pendant.
Chevron indicates wall wash.

Wall-mounted fixtures, Typical (Various Symbols)

Strip Fixture

Directional Light, Track Light, Flood Light

Linear Light, Tape Light

Emergency Lighting Unit, Ceiling-Mounted, Integral Battery

Emergency Lighting Unit, Ceiling-Mounted, Remote Battery

Emergency Lighting Unit, Wall-Mounted, Integral Battery

Emergency Lighting Unit, Wall-Mounted, Remote Battery

Exit Light, Ceiling-Mounted.
Shading and arrows indicate faces and directional chevrons.

Exit Light, Wall-Mounted.
Shading and arrows indicate faces and directional chevrons.

Exit/ELU Combo

Pole/Area Lights

Post-Top Area Light

Bollard Light

Hatch indicates light on an emergency or life safety circuit.

Single-Pole Switch
Two-Pole Switch
Three-Pole Switch

Switch Modifiers:

3: 3-Way	OS: Occupancy Sensor
4: 4-Way	VS: Vacancy Sensor
K: Keyed	CT: Above-Counter
D: Dimming	LV: Low-Voltage
T: Timer	M: Motor-Rated

Lighting Contactor

LC Lighting Control Panel

OS Occupancy Sensor

DL Daylight Harvesting Sensor

Lighting Tags

A
MDP-1a

Top Value: Fixture Type ID (Underlined)
Bottom Value, Lowercase Letter: Switch ID
Bottom Value, Number(s): Circuit Number
Bottom Value, Uppercase Letter(s): Panel

Absence of a switch designation on a lighting fixture indicates fixture is controlled by the only switch in the space. An "x" in place of the switch designation indicates unswitched.

Switch ID indicated by a lowercase letter. Switch IDs are unique per space. A switch with an ID "a" controls all devices within the space in which it is located tagged with "a". A switch without a tagged ID controls all lighting fixtures within a space. ID tags may be used on control devices other than switches, such as occupancy sensors or contactors.

Miscellaneous

Area Not in Contract

Note by Symbol

Callout:
Top Value: Detail Number on Sheet
Bottom Value: Sheet Number of Detail

Room
1
Room Name and Number

Power Symbols

Wall Ceiling Floor

Simplex Receptacle

Duplex Receptacle

6-30 Quadruplex Receptacle

Special Receptacle, Type as Indicated

Receptacle Modifiers:
##": Height AFF(to center)
CT: Device Mounted Above Counter Top
IG: Isolated Ground
H: Device Mounted Horizontally
WP: Weatherproof In-Use Cover

Half shading indicates split (typically switched)

Outside shading indicates tamperproof device

Center shading indicates GFI type

Full shading indicates tamperproof GFI type

Multioutlet Assembly
Filled squares indicate 120V outlet
Open squares indicate with USB

Cord Reel, Device Varies

Drop Cord, Device Varies

Junction Box

F1 Floor Box, see schedule for type

Emergency Power Off

DO Door Opener Push Plate

M Power Meter

Safety Switch, Fused

Safety Switch, Unfused

Motor Starter

Combination Starter/Disconnect

Contactor

Power Device and Equipment Tags

LP1A:1 Electrical DeviceTags: Uppercase letter(s) indicates Panel ID and circuit number. Lowercase letter indicates designation of controlling switch (where applicable).

XX-1 Equipment Tags: Equipment ID is indicated by an underlined tag adjacent to the equipment. See the equipment connection schedule for description, electrical requirements, and panel and circuit number. Symbols/graphic appearance of equipment varies.

Wiring

Solid, arced lines connecting equipment, devices, or fixtures indicate unswitched power circuiting. Wires are only intended to indicate to what circuit devices are connected. Actual connections, circuit routing, installtion, junction boxes, etc. shall be field-determined by the contractor.

Dashed, arced lines connecting equipment, devices, or fixtures indicate switched power.

Home run to branch circuit panelboard. The equipment name and circuit number(s) are indicated, separated by a hyphen. Homeruns are only intended to indicate panel and circuit number. Actual homerun location shall be field-determined by the contractor.

Power Distribution Equipment

SB1 MDP HP1A LP1A

Hatched fill indicates distribution panel or switchboard.
Solid fill indicates branch panel or load center.
Dashed box indicates code-required clearance (width and depth).
Door indicates front of recessed panel.

Devices and fixtures are tagged with Panel and circuit number. For example, a device tagged with "A:1" indicates the device is circuited to panel designated "A," circuit number 1.

T1 Transformer: Typically transformer names begin with or contain the letter "T". See Single-Line Diagram for description and requirements.

Telecom Symbols

Wall Ceiling Floor

Data Outlet

Telephone Outlet

Data/Telephone Outlet

Outlet Modifiers:
##": Height AFF (to center)
CT: Mounted Above Counter Top

Wireless Access Point

TV Outlet

Fire Alarm Symbols

P Manual Pull Station

Horn, Wall

F Horn, Ceiling

Strobe, Wall, Candela as indicated

Strobe, Ceiling, Candela as indicated

Horn/Strobe, Wall, Candela as indicated

Horn/Strobe, Ceiling, Candela as indicated

Remote Indicator w/ Test Switch, Wall

Remote Indicate w/ Test Switch, Ceiling

Smoke Detector

Heat Detector

CO Carbon Monoxide Detector

T R Beam Detector T: Transmitter R: Receiver

Combination Detector (Up to Three)

Duct Smoke Detector

Smoke Damper

Door Holder

DCL Door Closer

Fire Service Phone

XXX Addressible Module
AIM: Addressible Input Module
AOM:Addressible Output Control Module
AIO: Addressible Input/Output Module

XXXX Fire Alarm Control Unit
EVAC: Voice Evacuation Control Panel
FAA: Fire Alarm Annunciator
FACP: Fire Alarm Control Panel
FATC: Fire Alarm Terminal Cabinet
NACP: Notification Appliance Circuit Panel
FAMN: Fire Alarm Mass Notification Control Panel

XX Supervisory or Interface Device
PIV: Post Indicator Valve Supervisory
PS: Pressure Switch
R: Non-Addressible Relay
VS: Valve Supervisory Switch
WF: Water Flow Switch

Security Symbols

Security Camera
PTZ: Pan/Tilt/Zoom

CR Card Reader

CK Card Reader with Keypad

TV CC Closed Circuit TV Outlet

DC Door Contact

ES Electric Strike

IC Intercom

ML Magnetic Lock

RX Request to Exit Button

REX Request to Exit Sensor

MD Motion Detector

XXX Security Control Unit
SCP: Security Control Panel
SPS: Security Power Supply Unit

Phasing
(Typical All Symbols and Equipment)

Existing to Remain

Existing to Be Demolished

New

LST Consulting Engineers, PA
MANHATTAN
4809 Vue Du Lac Place, Suite 201
Manhattan, KS 66503
785.587.8042
WICHITA
125 S. Washington, Suite 150
Wichita, KS 67202
316.285.0696
www.LSTengineers.com
mail@LSTengineers.com

Project 25039 **8-1-2025**

Electrical Sheet List

E0.1	ELECTRICAL TITLE SHEET
E1.1	POWER PLANS 1ST AND 2ND
E1.2	POWER PLANS 3RD
E1.3	SPECIAL SYSTEMS 1ST AND 2ND
E1.4	SPECIAL SYSTEMS 3RD
E4.1	ENLARGED ELECTRICAL PLANS
E6.1	ELECTRICAL SCHEDULES AND DETAILS
E6.2	ELECTRICAL RISER DIAGRAMS
E6.3	ELECTRICAL PANEL SCHEDULES

GENERAL ELECTRICAL NOTES

A. COORDINATE INSTALLATION OF ELECTRICAL WORK ABOVE THE CEILING TO PROVIDE THE GREATEST POSSIBLE CLEARANCE FOR INSTALLATION OF PLUMBING AND MECHANICAL INSTALLATION. CONDUITS SHALL BE ROUTED THROUGH JOIST WEBS WHERE POSSIBLE.
B. VERIFY EXACT PLACEMENT OF ALL LUMINAIRES, DEVICES, AND EQUIPMENT SHOWN ON THE ELECTRICAL CONSTRUCTION DOCUMENTS WITH ARCHITECTURAL, MECHANICAL AND PLUMBING DRAWINGS PRIOR TO FINAL PLACEMENT.
C. ELECTRICAL EQUIPMENT AND DEVICES SHALL BE "LISTED" AND "IDENTIFIED" AS RATED FOR A MINIMUM OF 75°C CONDUCTOR TERMINATION.
D. DEFINITION OF TERMS
"SHALL": ACTION THAT IS REQUIRED WITHOUT OPTION OR QUALIFICATION.
"FURNISH": CONTRACTOR SHALL BE RESPONSIBLE FOR OBTAINING.
"INSTALL": CONTRACTOR SHALL BE RESPONSIBLE FOR LABOR AND CONSTRUCTION EQUIPMENT NECESSARY TO SET IN PLACE, CONNECT, CALIBRATE AND TEST EQUIPMENT FURNISHED BY HIM OR OTHERS.
"PROVIDE": CONTRACTOR SHALL FURNISH AND INSTALL.

MOUNTING HEIGHT REQUIREMENTS:

UNLESS SPECIFICALLY INDICATED OTHERWISE, THE FOLLOWING MOUNTING HEIGHTS SHALL APPLY:

• RECEPTACLES	16" TO BOTTOM
• TELECOMMUNICATIONS OUTLETS	16" TO BOTTOM
• LIGHT SWITCHES	48" TO TOP
• THERMOSTATS	48" TO TOP
• HUMIDISTATS	48" TO TOP
• FIRE ALARM PULL STATIONS	48" TO TOP
• FIRE ALARM NOTIFICATION DEVICES	LOWER OF: 88" TO BOTTOM OR TOP AT 6" BELOW CEILING

GENERAL LIGHTING NOTES

A. THE CIRCUITING OF ALL LUMINAIRES HAS BEEN SHOWN ON THE PLANS, AND THE CONTRACTOR SHALL FOLLOW THIS CIRCUITING LAYOUT.
B. CIRCUIT ALL EMERGENCY LIGHTS, NIGHT LIGHTS AND EXIT LIGHTS TO AN UNSWITCHED HOT CONDUCTOR, UPSTREAM OF ALL CONTROLS.
C. DIRECT CURRENT POWER WIRING FROM EXIT SIGNS TO REMOTE EXTERIOR EMERGENCY LIGHTING HEADS SHALL BE (2) #10 IN 1/2" CONDUIT UNLESS NOTED OTHERWISE.
D. IN AREAS WHERE CEILING MOUNTED OCCUPANCY SENSORS ARE USED FOR LIGHTING CONTROL IN CONJUNCTION WITH WALL SWITCHES, OCCUPANCY SENSOR/POWER PACK SHALL SWITCH LEG SHALL BE WIRED IN SERIES WITH WALL SWITCHES TO PROVIDE OVERRIDE "OFF" CONTROL FOR LIGHTS.
E. CONTROL WIRING FOR 0-10 V-dc DIMMING SIGNAL CIRCUITS SHALL BE NEC CLASS 1, ROUTED IN SAME RACEWAY/CABLE WITH LIGHTING CIRCUIT POWER CONDUCTORS. WIRING SHALL CONSIST OF (2) #16 SOLID CU THHN OR TFN CONDUCTORS. CONDUCTOR INSULATION COLOR SHALL BE VIOLET (+ V-dc) AND PINK (- V-dc). WHERE MC-CABLE IS USED FOR FINAL 6' POWER CONNECTION WHIP TO LUMINAIRE, UTILIZE "LUMINARY" TYPE MC-CABLE WITH INTEGRAL CLASS 1 CONTROL WIRING.

GENERAL POWER NOTES

A. THE CIRCUITING OF ALL DEVICES HAS BEEN SHOWN ON THE PLANS, AND THE CONTRACTOR SHALL FOLLOW THIS CIRCUITING LAYOUT.
B. VERIFY EXACT LOCATIONS OF HVAC AND PLUMBING EQUIPMENT WITH THE GENERAL CONTRACTOR AND ASSOCIATED SUBCONTRACTORS. COORDINATE CONDUIT STUB-UP AND POWER CONNECTIONS PRIOR TO COMMENCING ROUGH-IN WORK. ELECTRICAL DEVICES (DISCONNECTS, RECEPTACLES, ETC.) INSTALLED ON EQUIPMENT SHALL BE MOUNTED ON A NON-REMOVABLE PANEL OF THE EQUIPMENT. FIELD COORDINATE EXACT DEVICE MOUNTING LOCATIONS PRIOR TO INSTALLATION.
C. WALL MOUNTED HVAC CONTROL DEVICES (THERMOSTATS, TEMPERATURE SENSORS, HUMIDISTATS, CO_2 SENSORS, ETC) SHALL BE PROVIDED BY MECHANICAL CONTRACTOR. UNLESS NOTED OTHERWISE, ELECTRICAL CONTRACTOR SHALL PROVIDE SINGLE GANG WALL BOX WITH 1/2" CONDUIT STUBBED OUT TO ABOVE ACCESSIBLE CEILING WITH NYLON BUSHINGS AND PULLSTRING IN RACEWAY. REFER TO MECHANICAL DRAWINGS FOR LOCATIONS OF DEVICES.

GENERAL TELECOMMUNICATIONS NOTES

A. PROVIDE THE FOLLOWING RACEWAY ROUGH-IN FOR TELECOMMUNICATIONS OUTLET TYPES INDICATED:
- WALL PHONE OUTLET: 2"x4"x2-1/8" DEEP DEVICE BOX WITH (1) 3/4" CONDUIT TO ABOVE ACCESSIBLE CEILING.
- PHONE/DATA OUTLET: 4-11/16" SQUARE x 3-1/4" DEEP BOX (RACO #260 OR EQUAL) WITH 1-GANG DEVICE RING AND 1-1/4" CONDUIT TO ABOVE ACCESSIBLE CEILING.
- TV OUTLET: 4-11/16" SQUARE x 3-1/4" DEEP BOX (RACO #280 OR EQUAL) WITH 2-GANG DEVICE RING AND (1) 2" CONDUIT TO ABOVE ACCESSIBLE CEILING.

B. PROVIDE NYLON BUSHINGS FOR ALL CONDUIT ENDS NOT CONNECTED TO A BOX OR FITTING TO PROTECT CABLING FROM DAMAGE.
C. CONDUITS FROM EACH OUTLET SHALL BE STUBBED 2" ABOVE THE FINISHED CEILINGS IN AREAS WITH ACCESSIBLE TILES. IN AREAS WITH OPEN CEILINGS, STUB CONDUIT INTO STRUCTURAL JOIST SPACE.
D. PROVIDE BLANK, STAINLESS STEEL COVER PLATES FOR ALL OUTLETS NOT ACTIVATED BY OWNER.
E. PROVIDE SUITABLE PULL STRING IN ALL CONDUITS.
F. ALL TELECOMMUNICATIONS AND A/V CABLING, JACKS, CONNECTORS, TERMINATIONS, EQUIPMENT AND TESTING SHALL BE PROVIDED BY OWNER.

GENERAL FIRE ALARM NOTES

A. FIRE ALARM CABLING SHALL BE INSTALLED IN CONDUIT WHERE EXPOSED, INACCESSIBLE, AND WHERE SUBJECT TO PHYSICAL DAMAGE.
B. DUCT TYPE SMOKE DETECTORS SHALL BE FURNISHED AND WIRED BY FIRE ALARM CONTRACTOR, INSTALLED IN DUCT BY MECHANICAL CONTRACTOR.
C. FIRE ALARM SYSTEM HVAC SHUT DOWN RELAYS SHALL BE PROVIDED AND WIRED TO FIRE ALARM CONTROL PANEL BY FIRE ALARM CONTRACTOR. LOCATE RELAYS WITHIN 5' OF HVAC EQUIPMENT AND PROVIDE CONDUIT WITH PULL STRING FROM RELAY TO EQUIPMENT. UNIT SHUT DOWN CONTROL WIRING SHALL BE PROVIDED BY MECHANICAL CONTRACTOR.
D. AT LOCATION OF SMOKE DAMPERS AND COMBINATION FIRE/SMOKE DAMPERS, PROVIDE DUCT OR AREA SMOKE DETECTOR (AS SHOWN ON PLANS) WITHIN 5' OF DAMPER AND WIRE TO FIRE ALARM CONTROL PANEL. PROVIDE FIRE ALARM RELAY FOR CONTROL OF 120V POWER TO DAMPER ACTUATOR. DAMPER SHALL CLOSE UPON DETECTION OF SMOKE.
E. IN ADDITION TO VALVES INSTALLED ON FIRE SPRINKER SYSTEM RISER, ALL VALVES INSTALLED OUTSIDE THE BUILDING (POST INDICATOR VALVE, TAPPING SLEEVE VALVE, ETC.) SHALL BE SUPERVISED BY THE FIRE ALARM SYSTEM. PROVIDE ADDRESSABLE MONITORING MODULE AND SURGE PROTECTION DEVICE (DITEK #DTK-2MHLP48B) FOR EACH MONITORED VALVE. COORDINATE WITH GC AND SITE WORK CONTACTOR FOR ALL VALVES INSTALLED. MONITORING IS NOT REQUIRED FOR VALVES INSTALLED IN ROADWAY BOXES BY THE MUNICIPALITY/PUBLIC UTILITY.

GENERAL ELECTRICAL DEMOLITION NOTES

1. REMOVE ALL NM, BX, MC, AC AND OTHER CABLE SYSTEMS AND WIRING FOR ALL ABANDONED CIRCUITS.
2. REMOVE ALL ABANDONED CONDUITS ABOVE LAY-IN CEILINGS, EXPOSED CONDUITS, FLEXIBLE CONDUITS, SURFACE RACEWAY, SURFACE MOUNTED OUTLET/JUNCTION BOXES AND EQUIPMENT UNLESS NOTED OTHERWISE.
3. WHERE ABANDONED FEEDERS AND BRANCH CIRCUITS ARE CONCEALED WITHIN WALLS, FLOORS AND HARD CEILINGS THAT ARE TO REMAIN, REMOVE ALL WIRING AND CAP CONDUITS AT BOTH ENDS.
4. WHERE ABANDONED OUTLET AND JUNCTION BOXES ARE RECESSED FLUSH IN WALLS, FLOORS AND HARD CEILINGS THAT ARE TO REMAIN, REMOVE ALL WIRING AND WIRING DEVICES AND PROVIDE BLANK STAINLESS STEEL COVERPLATES FOR BOXES 6"x6" AND SMALLER. REMOVE BOXES LARGER THAN 6"x6" AND PATCH SURFACE TO MATCH EXISTING. COORDINATE WITH ARCHITECT FOR FINAL DIRECTION.
5. ALL EQUIPMENT, FIXTURES, RACEWAY, WIRING AND DEVICES WHICH ARE REMOVED SHALL BE REMOVED FROM THE JOB SITE BY THIS CONTRACTOR, UNLESS DIRECTED OTHERWISE BY THE ARCHITECT OR OWNER'S REPRESENTATIVE. CONFORM TO ALL LAWS AND ORDINANCES IN EFFECT CONCERNING THE PROPER DISPOSAL OF LUMINAIRES AND LAMPS.
6. COORDINATE THE REMOVAL OF MECHANICAL AND PLUMBING EQUIPMENT WITH THE MECHANICAL AND PLUMBING CONTRACTORS. ELECTRICAL CONTRACTOR SHALL DISCONNECT AND REMOVE ELECTRICAL POWER AND CONTROL CIRCUITS FOR EQUIPMENT BEING REMOVED. REMOVE ALL ELECTRICAL EQUIPMENT ASSOCIATED WITH DEMOLISHED MECHANICAL AND PLUMBING EQUIPMENT (DISCONNECT SWITCHES, MOTOR STARTERS, RELAYS, ETC).

GENERAL ELECTRICAL REMODEL NOTES

1. DESIGN IS BASED ON FIELD INFORMATION, AS-BUILT DRAWINGS AND OWNER FURNISHED INFORMATION. CONTRACTOR SHALL VERIFY ACCURACY OF ALL EXISTING CONDITIONS. IN CASE OF DISCREPANCY, PROVIDE ALL NECESSARY CONDUIT, WIRE, BOXES, FITTINGS, ETC. FOR A COMPLETE OPERATING ELECTRICAL SYSTEM.
2. EXISTING EQUIPMENT, WIRING DEVICES, LIGHTS, CONDUIT, WIRING, ETC., NOT DISTURBED BY NEW CONSTRUCTION WORK SHALL BE MAINTAINED AND UNDAMAGED. THESE ITEMS, IF SHOWN, ARE SHOWN FOR INFORMATION PURPOSES ONLY UNLESS NOTED OTHERWISE. THIS CONTRACTOR SHALL VISIT THE JOB SITE TO VERIFY ALL EXISTING CONDITIONS AND TO BECOME FAMILIAR WITH ALL WORK TO BE PERFORMED. FAILURE TO DO SO WILL NOT RELIEVE THIS CONTRACTOR OF THE RESPONSIBILITY FOR PERFORMING ALL WORK NECESSARY TO PROVIDE A WORKMANLIKE INSTALLATION.
3. FIELD VERIFY THE LOCATION AND CONDITION OF ALL EXISTING UTILITIES AND PROVIDE PROTECTION FOR THESE UTILITIES DURING THE COURSE OF WORK. EXISTING UTILITIES, BUILDING MATERIALS AND ASSOCIATED ITEMS DAMAGED BY THIS CONTRACTOR, OR ANY PARTIES ASSOCIATED WITH THIS CONTRACTOR, SHALL BE REPAIRED OR REPLACED AT THIS CONTRACTOR'S EXPENSE, IN A TIMELY MANNER, AND TO THE OWNER'S WRITTEN ACCEPTANCE.
4. THERE SHALL NOT BE ANY INTERRUPTION TO EXISTING SERVICES (ELECTRICAL, FIRE ALARM, TELEPHONE, ETC.) WITHOUT PRIOR SCHEDULING OF SUCH OUTAGES WITH THE OWNER, ARCHITECT, AND ALL OTHER PARTIES INVOLVED.
5. MAINTAIN ACCURATE RECORDS OF ALL MODIFICATIONS TO THE EXISTING SYSTEMS WHICH ARE TO REMAIN AND DELIVER ALL RECORD DRAWINGS INDICATING SUCH MODIFICATIONS TO THE OWNER UPON COMPLETION OF THE PROJECT. MAINTAIN IN THE PROJECT CONSTRUCTION OFFICE, AS THE WORK PROGRESSES, AN UP-TO-DATE, NEATLY MARKED COPY OF THESE DRAWINGS FOR REVIEW BY THE ARCHITECT, ENGINEER, OR OWNER'S REPRESENTATIVE.
6. WHERE NEW ADDITION WORK OR REMODELING INTERFERES WITH CIRCUITS IN ROOMS OTHERWISE UNDISTURBED, EXISTING CIRCUITS SHALL BE REWORKED AS REQUIRED TO MAINTAIN SERVICE.
7. EXISTING ROUGH-IN BOXES AND CONDUIT MAY BE UTILIZED FOR NEW DEVICES IF THEY ARE OF PROPER SIZE AND MATERIAL, AND ARE IN SUITABLE LOCATIONS. HOWEVER, NEW DEVICES AND WIRING MUST BE INSTALLED.
8. WHERE EXISTING EQUIPMENT IS BEING REPLACED WITH NEW EQUIPMENT OR RELOCATED EQUIPMENT, ELECTRICAL CONTRACTOR MAY REUSE THE EXISTING CONDUIT AND ROUGH-IN LOCATIONS IF POSSIBLE, BUT ALL CONDUCTORS SHALL BE NEW.
9. CIRCUITING SHOWN IN REMODELED AREAS MAY BE MODIFIED TO SUIT FIELD CONDITIONS. HOWEVER, KEEP CIRCUITS APPROXIMATELY AS SHOWN ON PLANS TO AVOID OVERLOADING OF CIRCUITS AND TO LIMIT VOLTAGE DROP.
10. MAINTAIN FIRE RATING OF ALL EXISTING WALLS, FLOORS AND CEILING SYSTEMS.
11. NEW DEVICES INSTALLED ON EXISTING WALLS AND CEILINGS IN OCCUPIED SPACES SHALL HAVE WIRING INSTALLED CONCEALED. SURFACE RACEWAY (WIREMOLD) SHALL ONLY BE INSTALLED ON EXISTING WALLS AND HARD CEILINGS WHERE WIRING CANNOT BE INSTALLED CONCEALED (I.E. CONCRETE, BRICK,CMU, ETC). OBTAIN APPROVAL FROM ARCHITECT, ENGINEER, AND OWNER PRIOR TO EACH OCCURRENCE WHERE SURFACE RACEWAY IS INSTALLED. SURFACE RACEWAY SHALL BE STEEL, SINGLE CHANNEL TYPE, IVORY COLORED, COMPLETE WITH ALL ELBOWS, BOXES, SUPPORTS, COVERS, ETC. AS REQUIRED. SURFACE RACEWAY SYSTEMS SHALL BE MANUFACTURED BY WIREMOLD, HUBBELL, OR MONOSYSTEMS, AND SHALL BE OF TYPES AS FOLLOWS:
- POWER AND FIRE ALARM: WIREMOLD 500 SERIES
- COMMUNICATIONS AND A/V: WIREMOLD 2400 SERIES

JGR JonesGillamRenz
730 N. Ninth 1881 Main Street, Suite 301
Salina, KS 67401 Kansas City, MO 64108
785.827.0386 jgr@jgrarchitects.com

THE RESIDENCE AT CARTER LAKE

NEW SENIOR LIVING FACILITY

CARTER LAKE, IOWA

LICENSED PROFESSIONAL ENGINEER TIMOTHY C. TREDWAY 21578 IOWA
08/01/2025

REVISIONS:

DATE: 8-1-2025
JOB: 25-3489
SHEET NO.:

E0.1

COPYRIGHTED ©

LST Consulting Engineers, PA
MANHATTAN
4809 Vue Du Lac Place, Suite 201
Manhattan, KS 66503
785.587.8042
WICHITA
125 S. Washington, Suite 150
Wichita, KS 67202
316.285.0696
www.LSTengineers.com
mail@LSTengineers.com

Project 25039 **8-1-2025**

NOTES BY SYMBOL

1. ROUTE CIRCUIT THROUGH CONTACTOR INDICATED.
2. 120V POWER FOR FIRE SPRINKLER SYSTEM FLOW SWITCHE(ES) AND BELL. PROVIDE #8 CU BONDING JUMPER FROM CIRCUIT EQUIPMENT GROUNDING CONDUCTOR TO METAL SPRINKLER SYSTEM PIPING AT AN ACCESSIBLE LOCATION PER NEC 250.104(B). COORDINATE WORK WITH FIRE SPRINKLER SYSTEM INSTALLER.
3. PROVIDE 30A/2P, SINGLE THROW, MANUAL MOTOR CONTROLLER SNAP SWITCH IN NEMA 1 ENCLOSURE. HUBBELL #HBL7832D OR EQUAL. MAKE FINAL FLEXIBLE CONNECTION TO BLOWER COIL/ELECTRIC HEAT.
4. ELEVATOR POWER MODULE SWITCH: 400A/208V/3P SWITCH COMPLETE WITH 225A DUAL ELEMENT, TIME DELAY CLASS 'J' FUSES, 120V CONTROL TRANSFORMER, FIRE ALARM SAFETY INTERFACE RELAY, KEY TEST SWITCH, GREEN PILOT LIGHT, AUXILIARY CONTACTS FOR ELEVATOR RECALL, AND FIRE ALARM VOLTAGE MONITORING RELAY. EATON BUSSMAN #PS-4-T20-R1-K-G-B-F1 OR EQUAL. COORDINATE EXACT MOUNTING LOCATION AND REQUIREMENTS WITH ELEVATOR EQUIPMENT INSTALLER, AND PROVIDE FINAL ELECTRICAL CONNECTION TO ELEVATOR CONTROLLER. SEE DETAIL 1:E6.1.
5. 30A DISCONNECT SWITCH, LOCKABLE IN "OFF" POSITION, WITH SOLID NEUTRAL AND (1) 20A DUAL-ELEMENT, TIME DELAY FUSE IN NEMA 1 ENCLOSURE FOR ELEVATOR CAB LIGHTS & EXHAUST. MOUNT AT 6'-0" AFF TO TOP AND LABEL WITH CORRESPONDING ELEVATOR CAR NUMBER AND CIRCUIT NUMBER. COORDINATE EXACT MOUNTING LOCATION AND REQUIREMENTS WITH ELEVATOR EQUIPMENT INSTALLER. PROVIDE FINAL ELECTRICAL CONNECTION TO ELEVATOR CONTROLLER.
6. PROVIDE POWER FOR ELEVATOR SHUNT TRIP CONTROL. SEE 1:E6.1 FOR MORE INFORMATION.

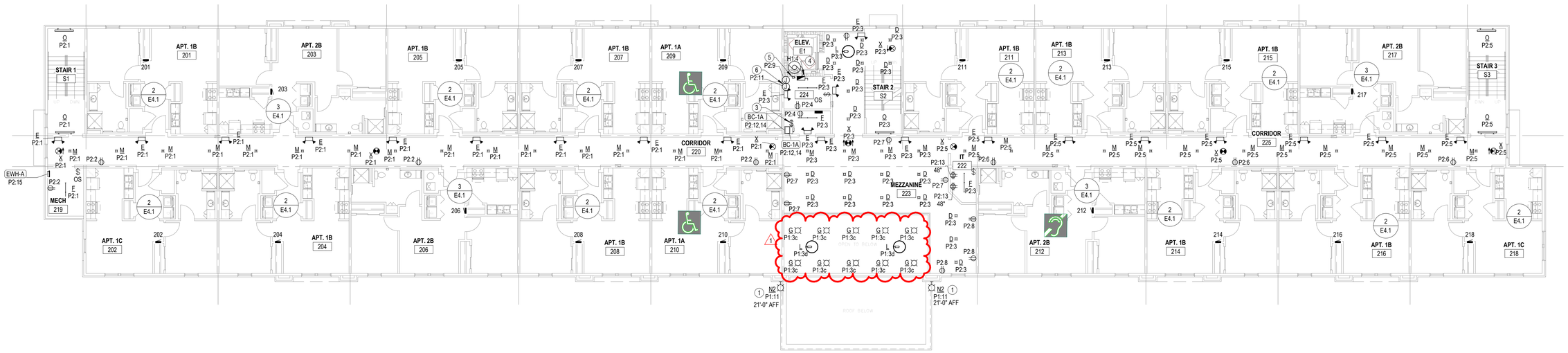

2 SECOND FLOOR-ELECTRICAL PLAN

3/32" = 1'-0"

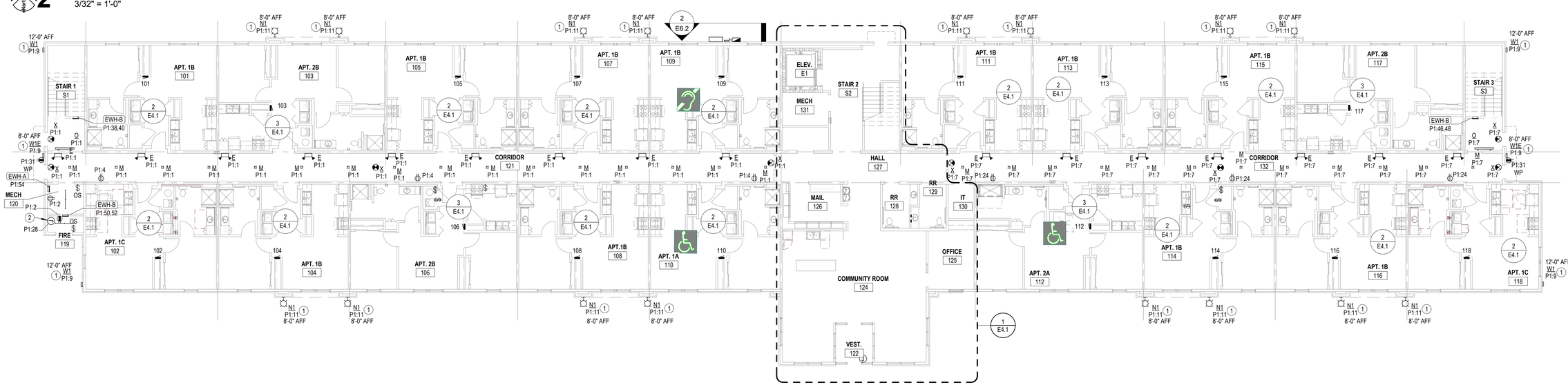

1 FIRST FLOOR-ELECTRICAL PLAN

3/32" = 1'-0"

JonesGillamRenz
730 N. Ninth
Salina, KS 67401
785.827.0386
1881 Main Street, Suite 301
Kansas City, MO 64108
jgr@jgrarchitects.com

THE RESIDENCE AT CARTER LAKE

NEW SENIOR LIVING FACILITY

CARTER LAKE, IOWA

LICENSED PROFESSIONAL ENGINEER
TIMOTHY C. TREDWAY
21578
IOWA
09/03/2025

REVISIONS:
1 09-03-2025 ADDENDUM #1

DATE: 8-1-2025
JOB: 25-3489
SHEET NO.:

E1.1

COPYRIGHTED ©

LST Consulting Engineers, PA
MANHATTAN
4809 Vue Du Lac Place, Suite 201
Manhattan, KS 66503
785.587.8042
WICHITA
125 S. Washington, Suite 150
Wichita, KS 67202
316.285.0696
www.LSTengineers.com
mail@LSTengineers.com

Project 25039 **8-1-2025**

NOTES BY SYMBOL

1. INSTALL LUMINAIRE ON WALL OF ELEVATOR PIT/HOISTWAY.
2. INSTALL RECEPTACLE ON WALL OF ELEVATOR PIT/HOISTWAY. VERIFY EXACT LOCATION WITH EQUIPMENT INSTALLER.
3. PROVIDE 60A/2P, SINGLE THROW, MANUAL MOTOR CONTROLLER SNAP SWITCH IN NEMA 1 ENCLOSURE. HUBBELL #HBL7862D OR EQUAL. MAKE FINAL FLEXIBLE CONNECTION TO BLOWER COIL/ELECTRIC HEAT.
4. PROVIDE 40A/2P, SINGLE THROW, MANUAL MOTOR CONTROLLER SNAP SWITCH IN NEMA 1 ENCLOSURE. HUBBELL #HBL7842D OR EQUAL. MAKE FINAL FLEXIBLE CONNECTION TO BLOWER COIL/ELECTRIC HEAT.
5. COORDINATE EXACT MOUNTING LOCATION OF DRINKING FOUNTAIN RECEPTACLE WITH PLUMBING CONTRACTOR. WIRE FROM LOAD SIDE OF ADJACENT GFI RECEPTACLE TO PROVIDE GFI PROTECTION FOR DRINKING FOUNTAIN RECEPTACLE.
6. INSTALL LED TAPE LIGHT BEHIND FITNESS ROOM MIRROR. REFERENCE 'M:A9.2' FOR MORE INFORMATION. PROVIDE ALL REQUIRED COMPONENTS AND ACCESSORIES FOR COMPLETE INSTALLATION.

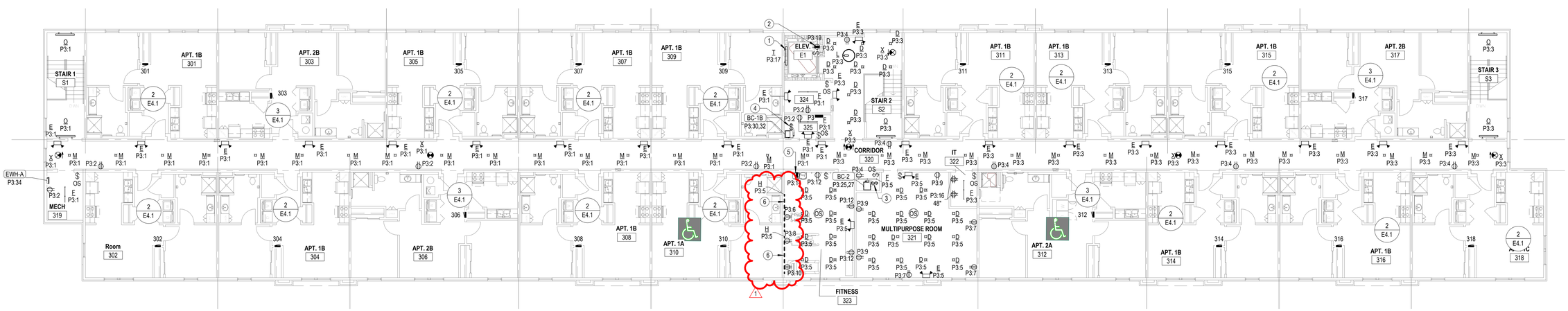

THIRD FLOOR-ELECTRICAL PLAN

3/32" = 1'-0"

JonesGillamRenz
730 N. Ninth
Salina, KS 67401
785.827.0386
1881 Main Street, Suite 301
Kansas City, MO 64108
jgr@jgrarchitects.com

THE RESIDENCE AT CARTER LAKE

NEW SENIOR LIVING FACILITY

CARTER LAKE, IOWA

LICENSED PROFESSIONAL ENGINEER
TIMOTHY C. TREDWAY
21578
IOWA
09/03/2025

REVISIONS:
1 09-03-2025 ADDENDUM #1

DATE: 8-1-2025
JOB: 25-3489
SHEET NO.:

E1.2

COPYRIGHTED ©

NOTES BY SYMBOL

1 CEILING MOUNTED SMOKE ALARM IN APARTMENTS TO BE 120VAC WITH 9V BATTERY BACKUP, INTERCONNECTED TO OTHERS IN SAME APARTMENT. DEVICE SHALL HAVE PHOTELECTRIC TYPE SMOKE DETECTOR WITH SOUNDER HORN HAVING AN 85 dB OUTPUT AT 10', SHALL HAVE A SINGLE BUTTON FOR TEST/SILENCE AND LED INDICATOR LIGHTS, AND SHALL BE UL 217 LISTED, BRK #SC701LBL OR EQUAL.

2 FIRE ALARM SMOKE DETECTOR.

3 FIRE ALARM ADDRESSABLE CONTROL MODULE FOR CONTROL OF APARTMENT UNITS NOTIFICATION APPLIANCE CIRCUIT. MODULE SHALL BE PROGRAMMED TO ACTIVATE APARTMENT UNITS NOTIFICATION APPLIANCES UPON GENERAL BUILDING FIRE ALARM AND UPON ACTIVATION OF ANY SMOKE DETECTOR OR CO DETECTOR WITHIN APARTMENT UNIT. MOUNT FLUSH IN WALL AT 8'-0" AFF.

4 PROVIDE DOOR ANNUNCIATOR SYSTEM A/V HORN/STROBE DEVICE AND LOW VOLTAGE TRANSFORMER AT ALL ACCESSIBLE APARTMENTS AND ALSO AT APARTMENTS DESIGNATED HEARING-IMPAIRED. INSTALL HORN/STROBE APPLIANCE AT 80" AFF. INSTALL TRANSFORMER IN DOUBLE GANG JUNCTION BOX ABOVE HORN/STROBE WITH BLANK COVER PLATE AND PROVIDE LOW VOLTAGE CONTROL WIRING. SEE DETAIL 3, SHEET E6.1. PROVIDE ENGRAVED SIGN AT THE HORN/STROBE DEVICE TO READ "DOOR"

5 PROVIDE PUSH BUTTON AT 48" AFF FOR ANNUNCIATOR SYSTEM AT ALL ACCESSIBLE APARTMENTS AND ALSO AT APARTMENTS DESIGNATED FOR HEARING-IMPAIRED. REFER TO ARCH DRAWINGS FOR APPLICABLE ROOMS. SEE DETAIL 3, SHEET E6.1.

6 PROVIDE PUSH BUTTON ROUGH-IN AND PREP DOOR JAM WITH RACEWAY AS INDICATED IN DETAIL 3.E6.1 FOR AUTOMATIC DOOR OPENER. COORDINATE EXACT REQUIREMENTS WITH OWNER.

7 PROVIDE ROUGH-IN FOR 24 HOUR INTERCOMM SYSTEM. COORDINATE EQUIREMENTS AND LOCATION WITH OWNER AND ARCHITECT.

8 PROVIDE ROUGH-IN FOR SECURITY CAMERA. COORDINATE LOCATIONS AND REQUIREMENTS WITH OWNER.

9 (2) 4" CONDUIT UP TO SECOND FLOOR FOR COMMUNICATIONS SERVICES. TERMINATE ABOVE SECOND FLOOR AND BELOW COMMUNICATIONS BACKBOARD. WHERE CONDUIT PENETRATES FIRE RATED ASSEMBLY, PROVIDE WITH FIRESTOPPING FITTINGS (WIREMOLD #FS4R-RED) AT BOTH ENDS.

NOTES BY SYMBOL

10 4" EMT CONDUIT SLEEVE(S) THROUGH WALL WITH NYLON BUSHINGS FOR COMMUNICATIONS CABLING. QUANTITY AND SIZE AS REQUIRED. INSTALL ABOVE ACCESSIBLE CEILING. WHERE CONDUITS PENETRATE FIRE WALL, PROVIDE WITH FIRESTOPPING FITTINGS (WIREMOLD #FS4R-RED) AT BOTH ENDS. PROVIDE J-HOOKS FOR COMMUNICATIONS CABLING INSTALLED ABOVE SUSPENDED CEILING, SPACED AT MAXIMUM 5'-0" ON CENTER. J-HOOKS SHALL HAVE 4" MIN BUNDLE CAPACITY, 1" BEND RADIUS CONTROL, AND SHALL BE U.L. 2043 LISTED. PANDUIT "J-PRO JP4 SERIES" OR EQUAL.

11 (2) 2" CONDUITS FOR COMMUNICATIONS SERVICES. SEE SITE PLAN FOR CONTINUATION.

12 PROVIDE 8" LONG SHEET OF 3/4" ACX FIRE RETARDANT PLYWOOD INSTALLED VERTICALY WITH BOTTOM AT 6" AFF, WIDTHAS REQUIRED. PLYWOOD SHALL BE PERMANENTLY FASTENDED TO THE WALL BY MEANS OF WALL ANCHORSUTILIZING GALVANIZED, ZINC PLATED, OR STAINLESS STEEL HARDWARE WITH A FLAT HEAD. FINISHED INSTALLATION SHALL HAVE FLUSH APPEARANCE WITH COUNTERSUNK SCREW HEADS TO PREVENT SPLITTING OF THE PLYWOOD. DRYWALL SCREWS ARE NOT ACCEPTABLE. PAINT WITH TWO COATS OF LIGHT GRAY FIRE RETARDANT SEALER PRIOR TO INSTALLATION OF ANY EQUIPMENT.

13 TELECOMMUNICATIONS GROUND BAR SHALL BE 13-1/4"W x 2"H x 1/4" THICK ELECTRO-TIN PLATED COPPER BUS BAR, COMPLETE WITH INSULATED STAND-OFFS AND STAINLESS STEEL BRACKETS, ERICO #TGBA14L06PT OR EQUAL. MOUNT AT 18" AFF. ALL CONNECTIONS TO GROUND BAR SHALL BE MADE USING COMPRESSION TYPE LUGS.

14 PROVIDE (2) CAT 5e UTP, NEC TYPE 'CMP' CABLES (SUPERIOR ESSEX #51-241-48 OR EQUAL) IN 3/4" CONDUIT FROM FACP TO MAIN TELECOM TERMINAL BOARD FOR CONNECTION TO FA SYSTEM DACT FOR REMOTE MONITORING.

15 PROVIDE ADDRESSABLE FIRE ALARM RELAYS AND MONITORING MODULES FOR ALL FIRE SPRINKLER FLOW SWITCHES, TAMPER SWITCHES AND BELL/GONG. COORDINATE QUANTITIES AND LOCATIONS WITH FIRE SPRINKLER CONTRACTOR.

16 PROVIDE MANUAL PULL STATION AT FACP CLOSET AND CONNECT TO FIRE ALARM SYSTEM.

17 PROVIDE SMOKE DETECTOR ABOVE FACP AND CONNECT TO FIRE ALARM SYSTEM.

LST Consulting Engineers, PA

MANHATTAN
4809 Vue Du Lac Place, Suite 201
Manhattan, KS 66503
785.587.8042

WICHITA
125 S. Washington, Suite 150
Wichita, KS 67202
316.265.0696

www.LSTengineers.com
mail@LSTengineers.com

Project 25039 8-1-2025

NOTES BY SYMBOL

18 SMOKE DETECTOR AND ADDRESSABLE RELAY FOR CONTROL OF ELECTROMAGNETIC DOOR HOLDERS. DOORS SHALL RELEASE UPON DETECTION OF SMOKE.

19 ADDRESSABLE FIRE ALARM RELAYS FOR ELEVATOR RECALL, FIREMAN'S HAT, AND POWER SHUNT-TRIP, AND ADDRESSABLE MONITORING MODULE FOR MONITORING OF SHUNT-TRIP VOLTAGE. SEE ETAIL 1:E6.1.

20 ELEVATOR LOBBY SMOKE DETECTOR FOR ELEVATOR RECALL. SEE 1:E6.1.

21 SMOKE DETECTOR AND HEAT DETECTOR IN ELEVATOR PIT/HOISTWAY FRE RECALL AND SHUT-DOWN. SEE 1:E6.1.

22 PROVIDE DUCT SMOKE DETECTOR WITHIN 5' OF FIRE/SMOKE DAMPER AND WIRE TO FIRE ALARM CONTROL PANEL. PROVIDE FIRE ALARM RELAY FOR CONTROL OF 120V POWER TO DAMPER ACTUATOR. DAMPER SHALL CLOSE UPON DETECTION OF SMOKE.

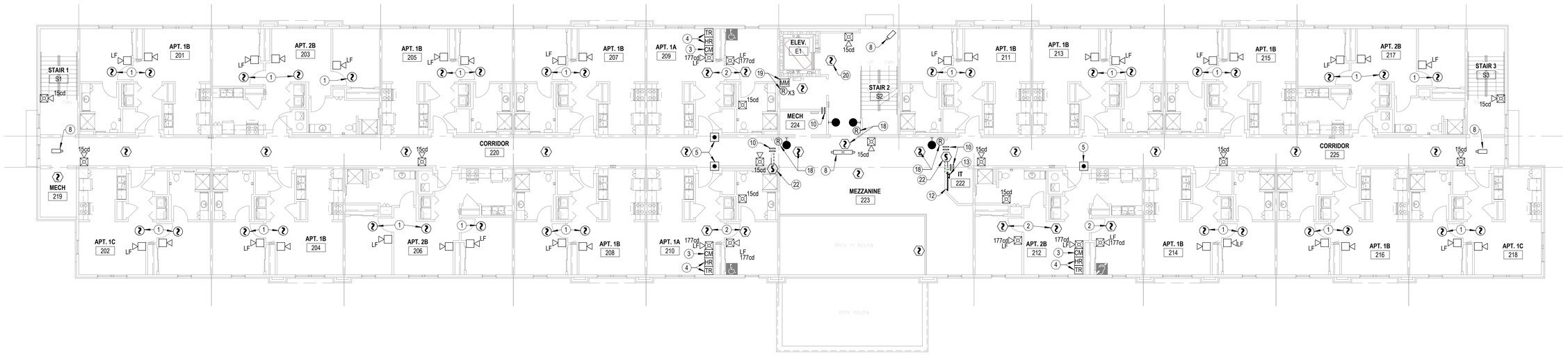

2 SECOND FLOOR-SPECIAL SYSTEMS PLAN

3/32" = 1'-0"

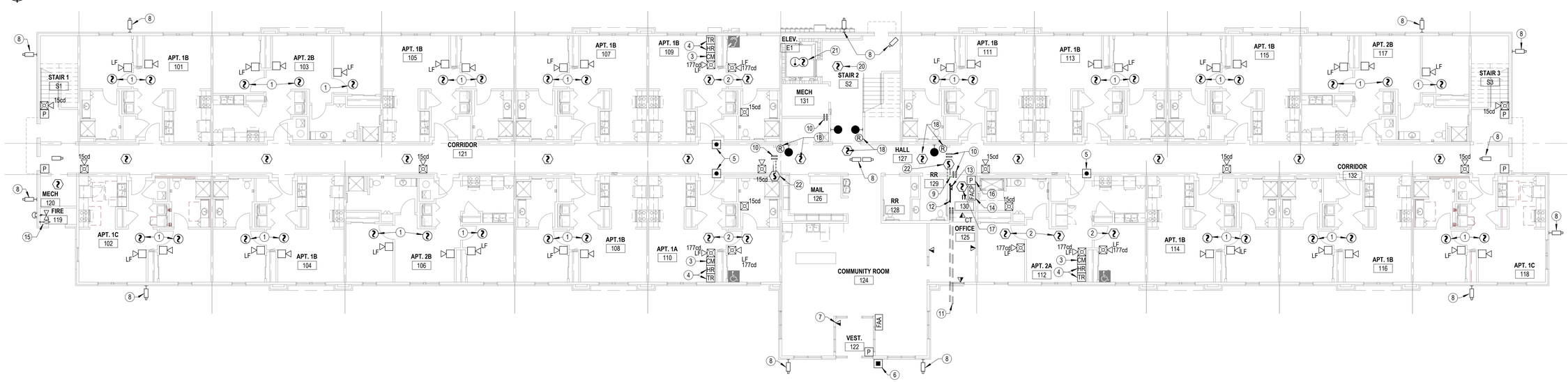

1 FIRST FLOOR-SPECIAL SYSTEMS PLAN

3/32" = 1'-0"

JonesGillamRenz
730 N. Ninth
Salina, KS 67401
785.827.0386
1881 Main Street, Suite 301
Kansas City, MO 64108
jgr@jgrarchitects.com

THE RESIDENCE AT CARTER LAKE

NEW SENIOR LIVING FACILITY

CARTER LAKE, IOWA

LICENSED PROFESSIONAL ENGINEER
TIMOTHY C. TREDWAY
21578
IOWA
08/01/2025

REVISIONS:

DATE: 8-1-2025
JOB: 25-3489
SHEET NO.:

E1.3

COPYRIGHTED ©

LST Consulting Engineers, PA
MANHATTAN
4809 Vue Du Lac Place, Suite 201
Manhattan, KS 66503
785.587.8042
WICHITA
125 S. Washington, Suite 150
Wichita, KS 67202
316.285.0696
www.LSTengineers.com
mail@LSTengineers.com

Project 25039 **8-1-2025**

NOTES BY SYMBOL

1. CEILING MOUNTED SMOKE ALARM IN APARTMENTS TO BE 120VAC WITH 9V BATTERY BACKUP, INTERCONNECTED TO OTHERS IN SAME APARTMENT. DEVICE SHALL HAVE PHOTELECTRIC TYPE SMOKE DETECTOR WITH SOUNDER HORN HAVING AN 85 dB OUTPUT AT 10', SHALL HAVE A SINGLE BUTTON FOR TEST/SILENCE AND LED INDICATOR LIGHTS, AND SHALL BE UL 217 LISTED, BRK #SC701LBL OR EQUAL.
2. FIRE ALARM SMOKE DETECTOR.
3. FIRE ALARM ADDRESSABLE CONTROL MODULE FOR CONTROL OF APARTMENT UNIT'S NOTIFICATION APPLIANCE CIRCUIT. MODULE SHALL BE PROGRAMMED TO ACTIVATE APARTMENT UNIT'S NOTIFICATION APPLIANCES UPON GENERAL BUILDING FIRE ALARM AND UPON ACTIVATION OF ANY SMOKE DETECTOR OR CO DETECTOR WITHIN APARTMENT UNIT. MOUNT FLUSH IN WALL AT 8'-0" AFF.
4. PROVIDE DOOR ANNUNCIATOR SYSTEM A/V HORN/STROBE DEVICE AND LOW VOLTAGE TRANSFORMER AT ALL ACCESSIBLE APARTMENTS AND ALSO AT APARTMENTS DESIGNATED HEARING-IMPAIRED. INSTALL HORN/STROBE APPLIANCE AT 80" AFF. INSTALL TRANSFORMER IN DOUBLE GANG JUNCTION BOX ABOVE HORN/STROBE WITH BLANK COVER PLATE AND PROVIDE LOW VOLTAGE CONTROL WIRING. SEE DETAIL 3, SHEET E6.1. PROVIDE ENGRAVED SIGN AT THE HORN/STROBE DEVICE TO READ "DOOR"
5. PROVIDE PUSH BUTTON AT 48" AFF FOR ANNUNCIATOR SYSTEM AT ALL ACCESSIBLE APARTMENTS AND ALSO AT APARTMENTS DESIGNATED FOR HEARING-IMPAIRED. REFER TO ARCH DRAWINGS FOR APPLICABLE ROOMS. SEE DETAIL 3, SHEET E6.1.
6. PROVIDE ROUGH-IN FOR SECURITY CAMERA. COORDINATE LOCATIONS AND REQUIREMENTS WITH OWNER.
7. SMOKE DETECTOR AND ADDRESSABLE RELAY FOR CONTROL OF ELECTROMAGNETIC DOOR HOLDERS. DOORS SHALL RELEASE UPON DETECTION OF SMOKE.
8. SMOKE DETECTOR AND HEAT DETECTOR IN ELEVATOR PIT/HOISTWAY FRE RECALL AND SHUT-DOWN. SEE 1:E6.1.
9. ELEVATOR LOBBY SMOKE DETECTOR FOR ELEVATOR RECALL. SEE 1:E6.1.

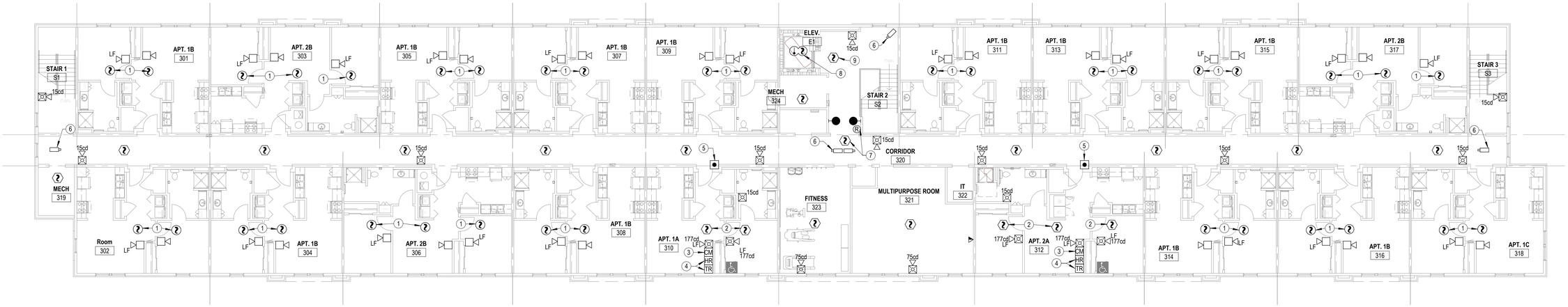

COMMUNICATIONS HOMERUNS FROM 3RD FLOOR APARTMENTS SHALL BE ROUTED ABOVE 2ND FLOOR CEILING TO TELEPHONE TERMINAL BOARD IN 'IT 222'

1 **THIRD FLOOR-SPECIAL SYSTEMS PLAN**
3/32" = 1'-0"

JonesGillamRenz
730 N. Ninth
Salina, KS 67401
785.827.0386
1881 Main Street, Suite 301
Kansas City, MO 64108
jgr@jgrarchitects.com

THE RESIDENCE AT CARTER LAKE
NEW SENIOR LIVING FACILITY
CARTER LAKE, IOWA

LICENSED PROFESSIONAL ENGINEER
TIMOTHY C. TREDWAY
21578
IOWA
08/01/2025

REVISIONS:

DATE: 8-1-2025
JOB: 25-3489
SHEET NO.:

E1.4

COPYRIGHTED ©

LST Consulting Engineers, PA
MANHATTAN
4809 Vue Du Lac Place, Suite 201
Manhattan, KS 66503
785.587.8042
WICHITA
125 S. Washington, Suite 150
Wichita, KS 67202
316.285.0696
www.LSTengineers.com
mail@LSTengineers.com

Project 25039 **8-1-2025**

NOTES BY SYMBOL

1. CONNECT EXHAUST FAN/LIGHT PROVIDED BY MECHANCIAL CONTRACTOR.
2. SWITCH CLOSEST TO DOOR SHALL CONTROL ALL LIGHTS IN BATHROOM, AND THE OTHER SWITCH SHALL CONTROL THE EXHAUST FAN.
3. PROVIDE 120V CONNECTION TO MICROWAVE/RANGE HOOD. STANDARD AND ADAPTABLE UNITS WILL HAVE MICROWAVE ABOVE RANGE. ACCESSIBLE UNITS WILL HAVE RANGE HOOD. COORDINATE EXACT ELECTRICAL ROUGH-IN REQUIREMENTS WITH EQUIPMENT PROVIDED. IF EQUIPMENT IS CORD AND PLUG, PROVIDE RECEPTACLE INSIDE CABINET ABOVE RANGE
4. PROVIDE SWITCH IN ACCESSIBLE UNITS FOR CONTROL OF RANGE HOOD.
5. PROVIDE RECEPTACLE BELOW COUNTER FOR CORD AND PLUG CONNECTION OF DISHWASHER. PROVIDE CORD AND GROUNDING PLUG AS REQUIRED.
6. SWITCHED RECEPTACLE BELOW COUNTER FOR GARBAGE DISPOSAL. COORDINATE EXACT LOCATION OF SWITCH WITH ARCHITECT.
7. PROVIDE 30A/2P SNAP SWITCH AND CONNECT WATER HEATER. INSTALL SWITCH ADJACENT TO WATER HEATER.
8. COORDINATE FINAL LOCATIONS OF ALL CATV AND PHONE OUTLETS WITH OWNER.
9. TELECOM DISTRIBUTION DEVICE APPROXIMATELY 4'-0" AFF. COORDINATE EXACT REQUIREMENTS WITH UTILITY PROVIDER SELECTED BY OWNER.
10. PROVIDE 40A/2P, SINGLE THROW, MANUAL MOTOR CONTROLLER SNAP SWITCH IN NEMA 1 ENCLOSURE. HUBBELL #HBL7842D OR EQUAL. MAKE FINAL FLEXIBLE CONNECTION TO BLOWER COIL/ELECTRIC HEAT.
11. PHOTOCELL FOR CONTROL OF EXTERIOR LIGHTS. SEE 2:E6.1 FOR MORE INFORMATION.
12. ROUTE CIRCUIT THROUGH CONTACTOR INDICATED.
13. SWITCH EXHAUST FAN WITH ROOM LIGHTS.
14. INSTALL LUMINAIRE ON WALL OF ELEVATOR PIT/HOISTWAY.
15. INSTALL RECEPTACLE ON WALL OF ELEVATOR PIT/HOISTWAY. VERIFY EXACT LOCATION WITH EQUIPMENT INSTALLER.
16. COORDINATE EXACT MOUNTING LOCATION OF DRINKING FOUNTAIN RECEPTACLE WITH PLUMBING CONTRACTOR. WIRE FROM LOAD SIDE OF ADJACENT GFI RECEPTACLE TO PROVIDE GFI PROTECTION FOR DRINKING FOUNTAIN RECEPTACLE.
17. ROUTE 120V CIRCUIT FOR HOT WATER RECIRCULATION PUMP THROUGH ADJACENT AQUASTAT. PROVIDE 20A/1P SNAP SWITCH ADJACENT TO PUMP AND MAKE FINAL FLEXIBLE CONNECTION. COORDINATE WITH PLUMBING CONTRACTOR.
18. TIMECLOCK AND CONTACTORS FOR EXTERIOR LIGHTING CONTROL, RE: 2:E6.1.
19. PROVIDE 120V POWER CONNECTION TO ELEVATOR SUMP PUMP ALARM PANEL AND 1" CONDUIT WITH PULL STRING STUBBED INTO ELEVATOR PIT FOR CONTROL CABLING. COORDINATE ALL WORK WITH PLUMBING CONTRACTOR.
20. PROVIDE 50A/2P, SINGLE THROW, MANUAL MOTOR CONTROLLER SNAP SWITCH IN NEMA 1 ENCLOSURE. HUBBELL #HBL7852D OR EQUAL. MAKE FINAL FLEXIBLE CONNECTION TO BLOWER COIL/ELECTRIC HEAT.
21. PROVIDE 60A/2P, SINGLE THROW, MANUAL MOTOR CONTROLLER SNAP SWITCH IN NEMA 1 ENCLOSURE. HUBBELL #HBL7862D OR EQUAL. MAKE FINAL FLEXIBLE CONNECTION TO BLOWER COIL/ELECTRIC HEAT.
22. PREP DOOR JAMB WITH RACEWAY AS INDICATED IN DETAIL 3:E6.1 FOR AUTOMATIC DOOR OPENER. COORDINATE EXACT REQUIREMENTS WITH OWNER.
23. PROVIDE TIMER SWITCH EQUAL TO AIR CYCLER 'SMART EXHAUST' FOR CONTROL OF EXHAUST FAN. SET SWITCH PER MANUFACTURER'S INSTRUCTIONS TO OPERATE FAN AS INDICATED BELOW:
    1 BEDROOM: 26 MINUTES PER HOUR
    2 BEDROOM: 35 MINUTES PER HOUR
24. INSTALL LED TAPE LIGHT BEHIND RESTROOM MIRROR. REFERENCE 'E:A8.1' FOR MORE INFORMATION. PROVIDE ALL REQUIRED COMPONENTS AND ACCESSORIES FOR COMPLETE INSTALLATION.
25. INSTALL LED TAPE LIGHT IN CEILING COVE. REFERENCE 'W:A4.5', AND 'A:A7.1' FOR MORE INFORMATION. PROVIDE ALL REQUIRED COMPONENTS AND ACCESSORIES FOR COMPLETE INSTALLATION.
26. PROVIDE PRESET SLIDE DIMMER COMPATIBLE WITH ASSOCIATED LIGHT FIXTURES. SEE 2:E1.1 FOR FIXTURES TO BE CONTROLLED BY SWITCHES 'C' AND 'D'.

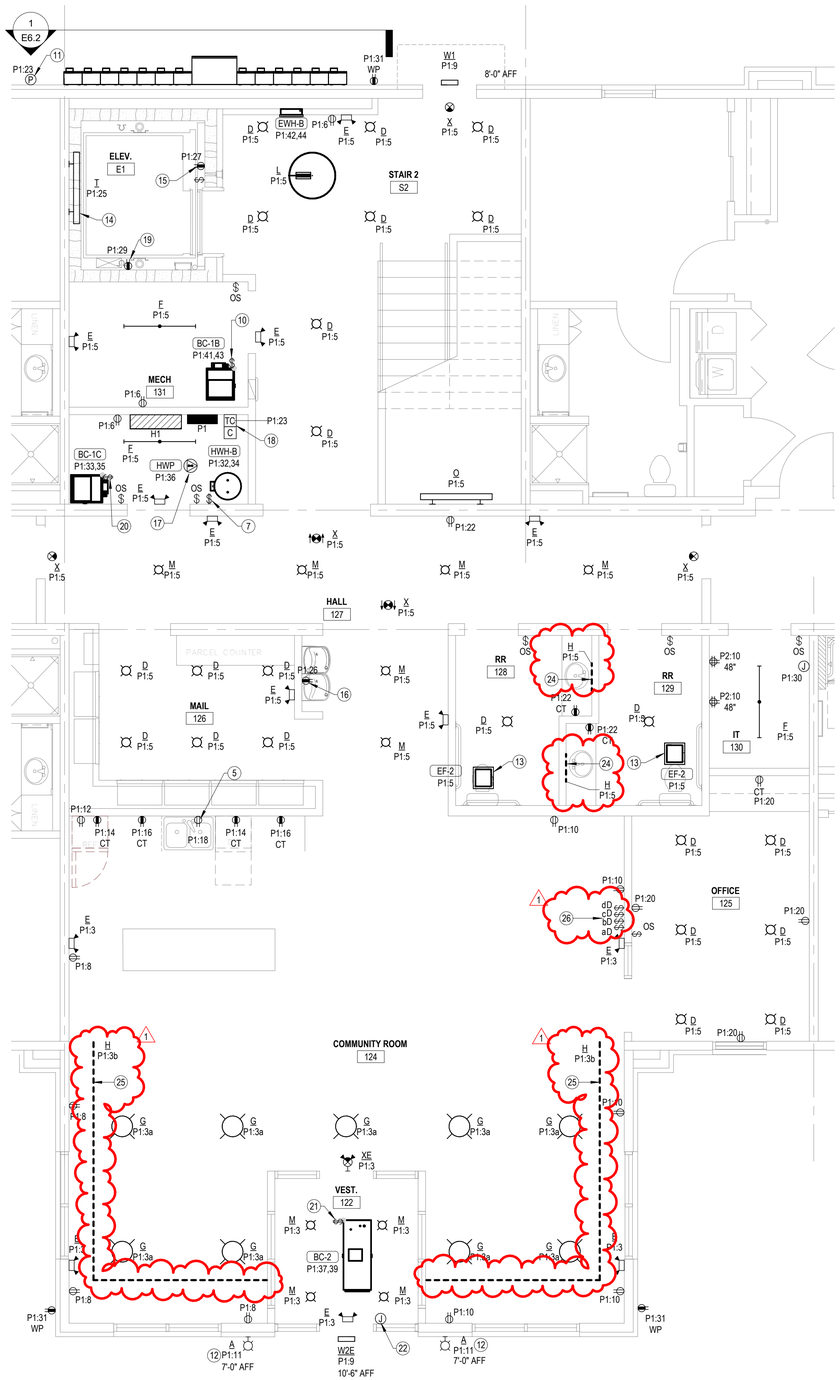

1 ENLARGED ELECTRICAL PLAN-COMMONS
1/4" = 1'-0"

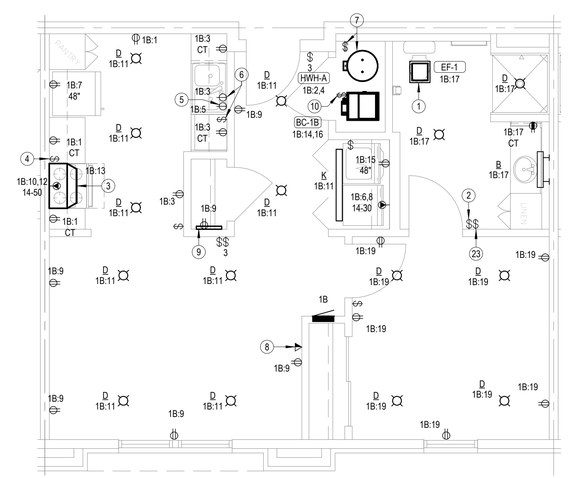

2 ENLARGED ELECTRICAL PLAN-1 BEDROOM
1/4" = 1'-0"

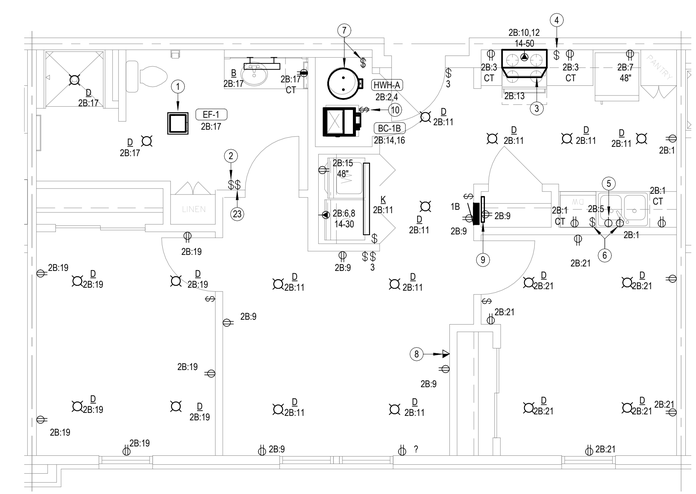

3 ENLARGED ELECTRICAL PLAN-2 BEDROOM
1/4" = 1'-0"

JonesGillamRenz
730 N. Ninth
Salina, KS 67401
785.827.0386
1881 Main Street, Suite 301
Kansas City, MO 64108
jgr@jgrarchitects.com

THE RESIDENCE AT CARTER LAKE
NEW SENIOR LIVING FACILITY
CARTER LAKE, IOWA

LICENSED PROFESSIONAL ENGINEER
TIMOTHY C. TREDWAY
21578
IOWA
09/03/2025

REVISIONS:
1 09-03-2025 ADDENDUM #1

DATE: 8-1-2025
JOB: 25-3489
SHEET NO.:

E4.1

COPYRIGHTED ©

LST Consulting Engineers, PA
MANHATTAN
4809 Vue Du Lac Place, Suite 201
Manhattan, KS 66503
785.587.8042
WICHITA
125 S. Washington, Suite 150
Wichita, KS 67202
316.285.0696
www.LSTengineers.com
mail@LSTengineers.com
Project 25039 8-1-2025

LIGHT FIXTURE SCHEDULE

GENERAL:
- ALL LED'S SHALL BE 4000K CORRELATED COLOR TEMPERATURE, MINIMUM 80 CRI
- ALL FIXTURES SHALL ADHERE TO LM79 AND LM80 STANDARDS
- ALL APARTMENT LIGHT FIXTURES SHALL BE ENERGY STAR CERTIFIED

NOTES:
1. PROVIDE FIXTURE WITH EMERFENCY BATTERY INTEGRAL CHARGER WITH SELF-DIAGNOSTIC/SELF-TESTING ELECTRONICS.
2. FIXTURE SHALL BE CAPABLE OF WALL OR CEILING MOUNT APPLICATIONS AND SHALL HAVE BREAK-OUT DIRECTIONAL CHEVRONS.
3. FIXTURE SHALL BE CAPABLE OF OPERATION IN TEMPERATURES RANGING FROM -4 °F THROUGH 104 °F.
4. U.L. LISTED FOR 'WET LOCATION'.
5. U.L. LISTED FOR 'DAMP LOCATION'.
6. PROVIDE FIXTURE/POLE ASSEMBLY WITH 20' ROUND STRAIGHT STEEL POLE, BLACK TO MATCH FIXTURE.
7. FIXTURE/POLE ASSEMBLY SHALL BE RATED FOR 100 MPH WIND LOADS. PROVIDE WITH VIBRATION DAMPER PER MANUFACTURER'S RECOMMENDATIONS.
8. WHERE INSTALLED OUTSIDE OR IN BATHROOMS FIXTURE SHALL BE 'DAMP LOCATION' U.L. LISTED, WHERE ABOVE SHOWERS OR BATHRUBS FIXTURE SHALL BE 'WET LOCATION' U.L. LISTED.
9. PROVIDE FIXTURE WITH INTEGRAL OCCUPANCY SENSOR AND CONTROLS TO DIM FIXTURE TO 50% LIGHT OUTPUT WHEN UNOCCUPIED.
10. PROVIDE FIXTURE/POLE ASSEMBLY WITH 10' ROUND STRAIGHT STEEL POLE, BLACK TO MATCH FIXTURE.
11. PROVIDE FIXTURE WITH MCHAN-8-LP MOUNTING CHANNEL. COORDINATE INSTALLATION REQUIREMENTS WITH G.C.

MARK	MANUFACTURER	MODEL NUMBER	WATTAGE	LUMEN OUTPUT	DRIVER	MOUNTING	FINISH	DESCRIPTION	NOTES
A	SELECTED BY ARCHITECT	SELECTED BY ARCHITECT	[redacted]	[redacted]	STANDARD	SURFACE WALL	---	ENTRANCE ACCENT LIGHT SELECTED BY ARCHITECT	--
B	---	---	[redacted]	[redacted]	STANDARD	SURFACE WALL	---	24" BATHROOM VANITY LIGHT SELECTED BY INTERIOR DESIGNER	--
D	HALO	SMX6RLSFSD2W	13.00 W	1200 lm	LED DRIVER, DIMMABLE	CEILING SURFACE	WHITE	6" DIA ROUND SURFACE MOUNT DOWNLIGHT WITH SELECTABLE LUMEN OUTPUT	8
E	LITHONIA	EU2L	[redacted]	[redacted]	--	SURFACE WALL	WHITE	TWO HEAD EMERGENCY LIGHT	1
F	DAY-BRITE CFI	FSS440L840-UNV-DIM	30.00 W	4077 lm	LED DRIVER, DIMMABLE	SUSPENDED	WHITE	4' STANDARD STRIP WITH CURVED FROSTED ACRYLIC LENS	---
G	HALO	SMX14RLSFSD2W	26.00 W	2000 lm	0-10V DIMMING TO 5%	CEILING SURFACE	WHITE	14" DIA ROUND SURFACE MOUNT DOWNLIGHT WITH SELECTABLE LUMEN OUTPUT	8
H	TIVOLI	TPLDLBI3012	1.46 W	120 lm	STANDARD	---	WHITE	LED STRIP TAPE LIGHT	11
K	DAY-BRITE CFI	FLP430L840-R-UNV-DIM	20.00 W	3039 lm	LED DRIVER, DIMMABLE	CEILING SURFACE	WHITE	4' LINEAR LED WITH ROUND FROSTED LENS	---
L	---	---	[redacted]	[redacted]	STANDARD	CEILING SURFACE	---	PENDANT LIGHT SELECTED BY INTERIOR DESIGNER	5
M	LITHOINA	P6RD12094WCL-Z10U	10.00 W	1000 lm	0-10V DIMMING TO 10%	RECESSED	WHITE	6" ROUND RECESSED DOWNLIGHT	---
N1	GARDCO	GCM-B05-840-WAW-SPT	36.00 W	3000 lm	STANDARD	SURFACE WALL	BLACK	EXTERIOR LED UP/DOWN WALL SCONCE WITH SPOT UP AND WALL WASH DOWN DISTRIBUTION	5
N2	GARDCO	GCM-B02-840-SPT	18.00 W	1611 lm	STANDARD	SURFACE WALL	BLACK	EXTERIOR LED UP ONLY WALL SCONCE WITH SPOT DISTRIBUTION	5
O	LITHOINA	WL4-40L-EZ1-LP840-MSD7-DIM50-E10WLCP	39.50 W	3927 lm	LED DRIVER, DIMMABLE	SURFACE WALL	WHITE	4 FT. WALL MOUNTED STAIRWELL LIGHT WITH EMERGENCY BATTERY BACKUP	9
R1	LITHONIA	DSX0 LED P6 40K T4M MVOLT	137.00 W	17391 lm	STANDARD	POLE	BLACK	LED AREA LIGHT, SINGLE HEAD FULL CUT-OFF WITH IES TYPE IV DISTRIBUTION	4,6,7
R2	LITHONIA	DSX2 LED P4 40K BLC4 MVOLT	93.00 W	8326 lm	STANDARD	POLE	BLACK	LED AREA LIGHT, SINGLE HEAD FULL CUT-OFF WITH IES TYPE IV DISTRIBUTION AND BACKLIGHT CONTROL	4,6,7
R3	LITHONIA	DSX0 LED P1 40K BCL3 MVOLT	34.00 W	3344 lm	STANDARD	POLE	BLACK	LED AREA LIGHT, SINGLE HEAD FULL CUT-OFF WITH IES TYPE III DISTRIBUTION AND BACKLIGHT CONTROL	4,6,7
S	ACCLAIM	DFB-111-AKEU	50.00 W	2455 lm	STANDARD	GRADE	BLACK	IP-66 RATED, GRADE MOUNTED LED FLOOD LIGHT	4
T	LITHOINA	FEM-L48-4000LM-IMAFL-WD-MVOLT-GZ10-40K -80CRI	23.80 W	3525 lm	STANDARD	SURFACE WALL	WHITE	4 FT. FULLY ENCLOSED AND GASKETED INDUSTRIAL FIXTURE WITH FROSTED, RIBBED, IMPACT-RESISTANT ACRYLIC LENS	---
W1	LITHONIA	WPX1 LED P1 40K MVOLT DBLXD	11.00 W	1568 lm	STANDARD	SURFACE WALL	BLACK	EXTERIOR LED WALL PACK	4
W1E	LITHONIA	WPX1 LED P1 40K MVOLT E14WC DBLXD	11.00 W	1568 lm	STANDARD	SURFACE WALL	BLACK	EXTERIOR LED WALL PACK WITH EMERGENCY BATTERY BACKUP	4
W2E	LITHONIA	WPX1 LED P2 40K MVOLT E14WC DBLXD	24.00 W	2912 lm	STANDARD	SURFACE WALL	BLACK	EXTERIOR LED WALL PACK WITH EMERGENCY BATTERY BACKUP	4
X	LIFE SAFETY LIGHTING	LSXS2RWEMSDT	[redacted]	[redacted]	--	CEILING / WALL	WHITE	UNIVERSAL SINGLE/DOUBLE FACE POLYCARBONATE EXIT SIGN	2
XE	LITHONIA	LHQM LED R HO	[redacted]	[redacted]	--	WALL	WHITE	COMBO EXIT/EMERGENCY LIGHTING UNIT	1,2

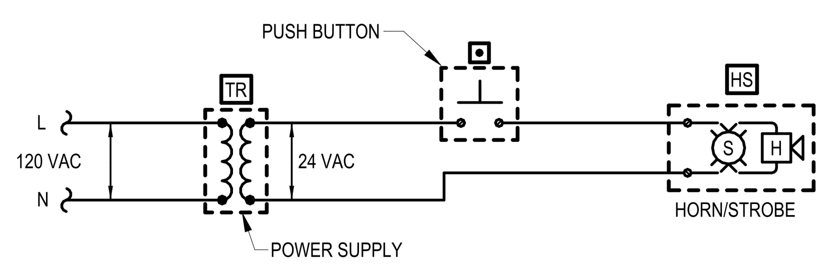

DOOR ALARM BUZZER SYSTEM NOTES
1. PROVIDE DOOR ANNUNCIATOR SYSTEM COMPLETE WITH PUSH BUTTON, HORN/STROBE(S), POWER SUPPLIES AND ALL WIRING REQUIRED. HORN/STROBE SHALL ACTIVATE WHEN PUSH BUTTON IS DEPRESSED.
2. HORN/STROBE SHALL OPERATE AT 24VAC, HAVE A CLEAR LENS WITH 50cd STROBE AND HORN WITH 82dB AT 10', UL 1638 LISTED, EDWARDS #6536-G5. FLUSH MOUNT IN WALL AT 6'-8" AFF.
3. PUSH BUTTON SHALL BE SELECTED BY INTERIOR DESIGNERMOUNT AT 48" AFF. ENSURE COMPATIBILITY WITH ACCESSIBLE UNIT HORN STROBE.
4. POWER SUPPLY SHALL BE A LOW VOLTAGE CLASS 2 TRANSFORMER COMPATIBLE WITH DOORBELL SELECTED BY INTERIOR DESIGNER. FLUSH MOUNT IN 2-GANG WALL BOX WITH BLANK COVER PLATE, DIRECTLY ABOVE HORN/STROBE.
5. LOW VOLTAGE CLASS 2 CABLING SHALL BE MINIMUM 18 AWG UNSHIELDED.

4 ACCESSIBLE APARTMENT DOORBELL WIRING SCHEMATIC
12" = 1'-0"

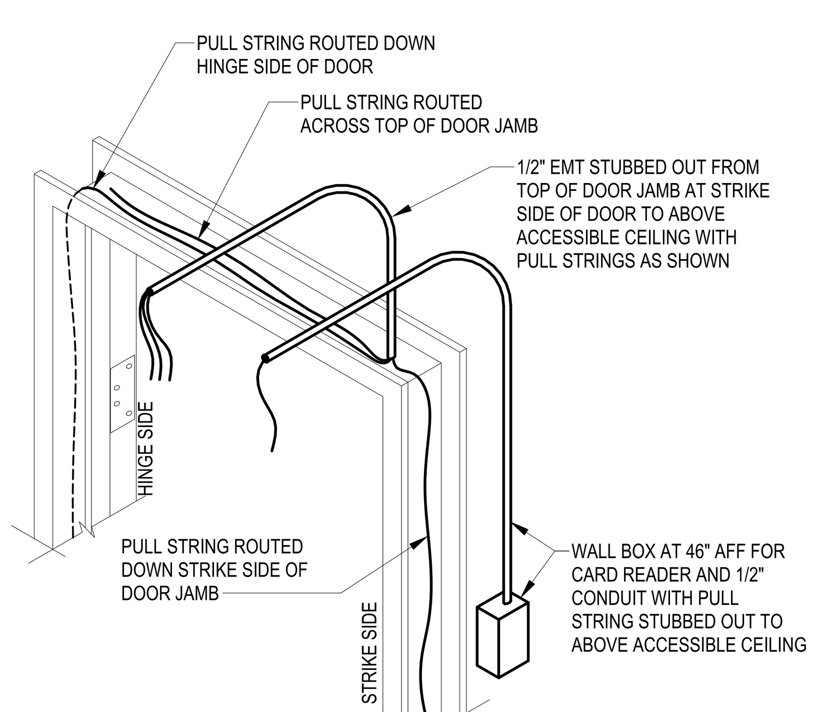

3 DOOR ACCESS CONTROL ROUGH-IN DIAGRAM
12" = 1'-0"

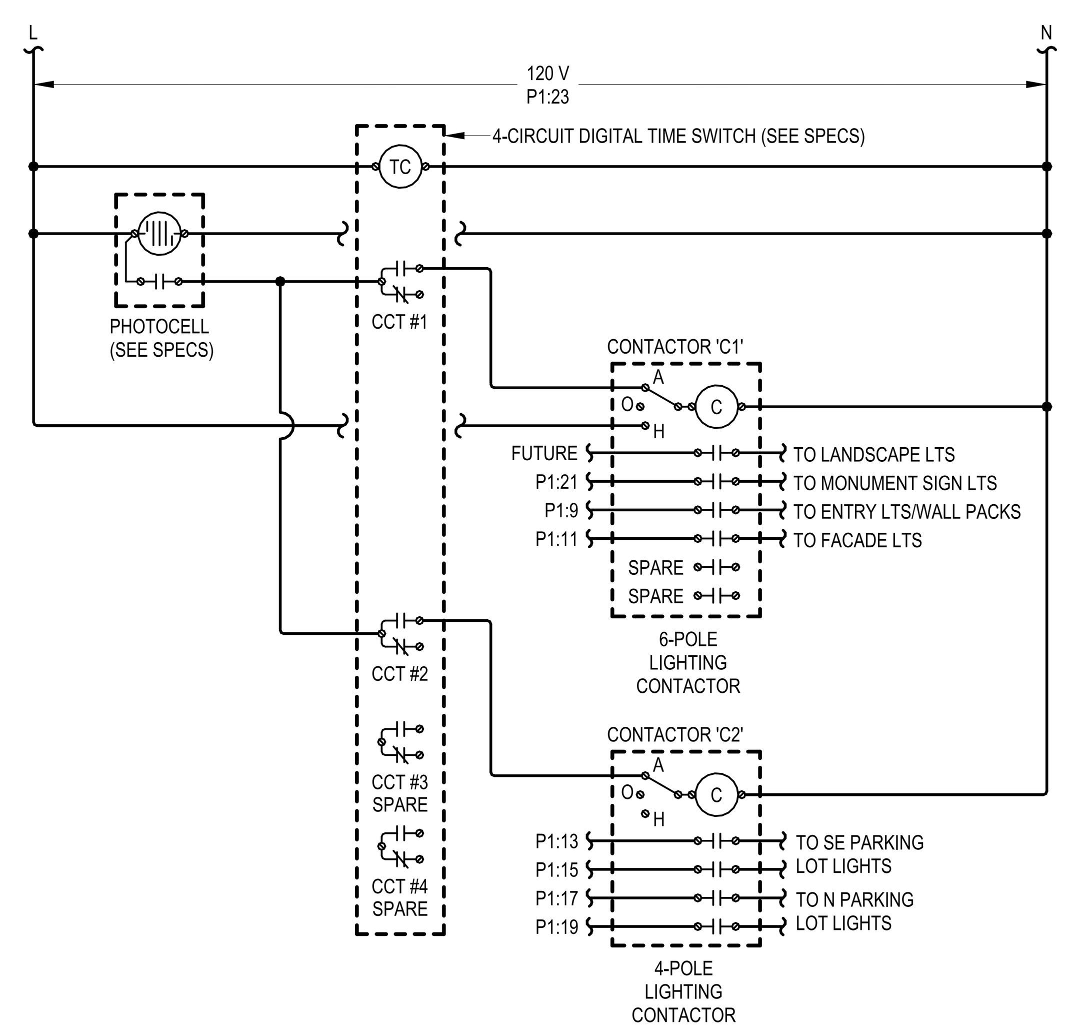

2 LIGHTING CONTROL DIAGRAM
NO SCALE

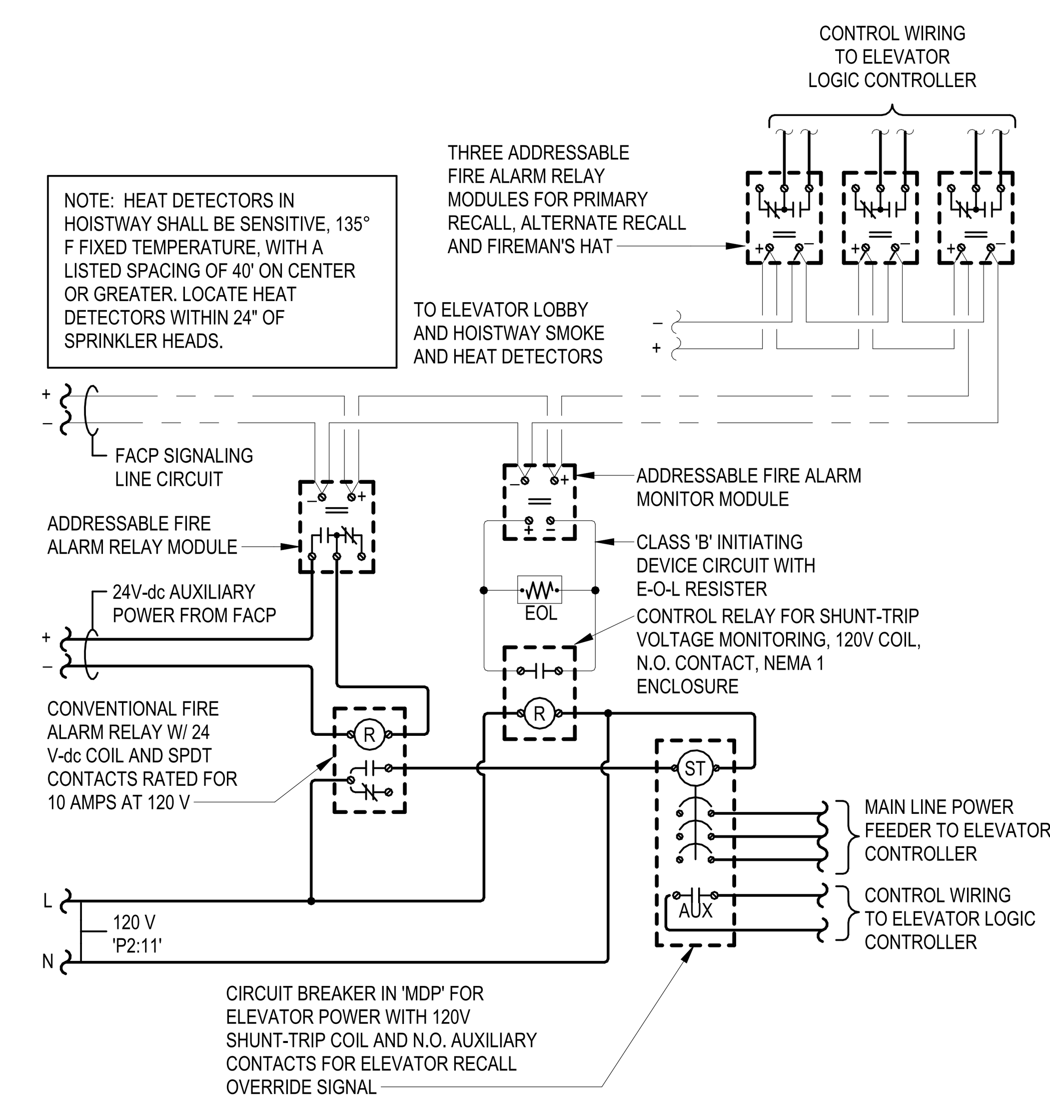

ELEVATOR RECALL AND SHUT-DOWN SEQUENCE OF OPERATION:

1. UPON SENSING SMOKE FROM ONE OR MORE ELEVATOR LOBBY OR HOISTWAY, THE SMOKE DETECTOR SHALL SIGNAL THE FIRE ALARM CONTROL PANEL, WHICH WILL FORWARD THE SIGNAL TO THE ELEVATOR LOGIC CONTROLLER VIA ADDRESSABLE RELAY MODULES TO RECALL ELEVATOR CAB TO THE PRIMARY RECALL FLOOR. IF PRIMARY RECALL FLOOR'S LOBBY SMOKE DETECTOR SENSES SMOKE AT THAT FLOOR, THE ELEVATOR CONTROLLER WILL SEND THE ELEVATOR CAB TO THE NEXT FLOOR CLEAR OF SMOKE. ONCE THE ELEVATOR CAB HAS REACHED THE DESIGNATED FLOOR, THE ELEVATOR CAB DOORS WILL OPEN AND THE CONTROLLER WILL LOCK THE ELEVATOR CAB AT THAT FLOOR, DISABLING THE ELEVATOR CAB CONTROLS, UNLESS A FIREMAN'S KEY IS USED TO OVERRIDE AUTOMATIC CONTROLS.
2. ALL SMOKE DETECTORS ASSOCIATED WITH ELEVATOR RECALL (LOBBY AND HOISTWAY) SHALL TRANSMIT A SEPARATE AND DISTINCT VISIBLE ANNUNCIATION AT THE FIRE ALARM CONTROL PANEL.
3. UPON SENSING A HEAT ALARM CONDITION IN THE ELEVATOR HOISTWAY, THE HEAT DETECTOR SHALL SIGNAL THE FIRE ALARM CONTROL PANEL, WHICH WILL FORWARD THE SIGNAL TO THE ADDRESSABLE RELAY MODULE TO ACTIVATE (VIA A CONVENTIONAL FIRE ALARM RELAY) THE SHUNT-TRIP BREAKER POWERING THE ELEVATOR SO AS TO DISCONNECT POWER TO THAT CIRCUIT. THIS IS TO BE A NON-AUTO RESET SWITCH. WHEN THE SPRINKLER HEAD HAS REACHED ITS CRITICAL TEMPERATURE OF 165° F., THE HEAD WILL BEGIN DISCHARGE OF WATER.

1 ELEVATOR RECALL AND SHUT-DOWN WIRING DIAGRAM
NO SCALE

JonesGillamRenz
730 N. Ninth
Salina, KS 67401
785.827.0386
1881 Main Street, Suite 301
Kansas City, MO 64108
jgr@jgrarchitects.com

THE RESIDENCE AT CARTER LAKE
NEW SENIOR LIVING FACILITY
CARTER LAKE, IOWA

LICENSED PROFESSIONAL ENGINEER TIMOTHY C. TREDWAY 21578 IOWA
09/03/2025

REVISIONS:
1 09-03-2025 ADDENDUM #1

DATE: 8-1-2025
JOB: 25-3489
SHEET NO.:
E6.1

COPYRIGHTED ©

LST Consulting Engineers, PA
MANHATTAN
4809 Vue Du Lac Place, Suite 201
Manhattan, KS 66503
785.587.8042
WICHITA
125 S. Washington, Suite 150
Wichita, KS 67202
316.285.0696
www.LSTengineers.com
mail@LSTengineers.com

Project 25039 **8-1-2025**

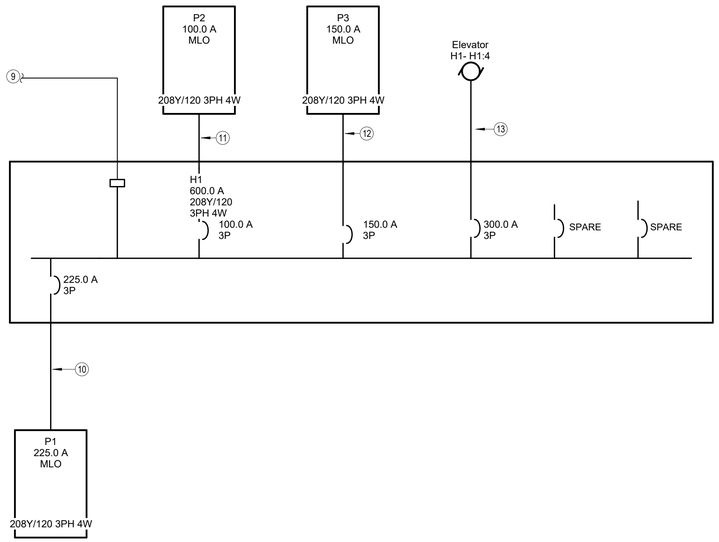

3 HOUSE ELECTRIC SERVICE ONE LINE DIAGRAM

1" = 1'-0"

DWELLING UNIT FEEDER SCHEDULE (ALUMINUM)	
PANEL NAME	FEEDER SIZE
105, 107, 108, 109, 110, 111, 112, 113, 115, 205, 207, 208, 209, 210, 211, 213, 215, 305,...	2#2/0, #2/0N, #4G
103, 106, 114, 117, 206, 212, 308, 312, 315	2#3/0, #3/0N, #3G
101, 104, 116, 201, 203, 214, 217, 303, 306,...	2#4/0, #4/0N, #2G
102, 118, 202, 204, 216, 218, 301, 302, 304,...	2#250KCMIL, #250 KCMIL N, #1G

DWELLING UNIT FEEDER SCHEDULE (COPPER)	
PANEL NAME	FEEDER SIZE
103, 105, 106, 107, 108, 109, 110, 111, 112, 113, 114, 115, 117, 205, 206, 207, 208, 209, 210, 211, 212, 213, 215, 305, 306, 307, 308,...	2#1/0, #1/0N, #4G
101, 104, 116, 201, 203, 214, 217, 303, 314,...	2#2/0, #2/0N, #4G
102, 118, 202, 204, 216, 218, 301, 302, 304,...	2#3/0, #3/0N, #3G

NOTES BY SYMBOL

1. METER CENTER MAIN, 3-PH IN; 3-PH OUT, 208/120V-3PH, 4 WIRE WITH 2000A/3P MAIN BREAKER, 65 KAIC RATED, SERVICE ENTRANCE RATED WITH INTEGRAL SURGE PROTECTION DEVICE. SQUARE D 'EZ METER-PAK' #EZM32000CBU. PROVIDE SIGNAGE AT DISCONNECT SWITCH TO READ 'SERVICE DISCONNECT 1 OF 2'
2. 4-SOCKET BRANCH UNITS, 3-PH IN; 1-PH OUT, WITH (4) 125A BRANCH BREAKERS AS INDICATED. METER SOCKETS SHALL BE RINGLESS TYPE, 5-JAW WITHOUT SQUARE D 'EZ METER-PAK' #EZMR314125. PROVIDE PERMANENT LABEL ON EACH METER SOCKET BREAKER INDICATING THE APARTMENT BEING SERVED.
3. 3-SOCKET BRANCH UNITS, 3-PH IN; 1-PH OUT, WITH (4) 125A BRANCH BREAKERS AS INDICATED. METER SOCKETS SHALL BE RINGLESS TYPE, 5-JAW WITHOUT SQUARE D 'EZ METER-PAK' #EZMR313125. PROVIDE PERMANENT LABEL ON EACH METER SOCKET BREAKER INDICATING THE APARTMENT BEING SERVED.
4. #3/0 CU GROUNDING ELECTRODE CONDUCTOR TO CONCRETE ENCASED ELECTRODE, UNDERGROUND METAL WATER PIPE, AND DRIVEN GROUND ROD. BOND ALL ITEMS IN ACCORDANCE WITH NEC ARTICLE 250.
5. (5) PARALLEL 4" CONDUITS EACH WITH (4) #400 KCMIL COPPER FROM TRANSFORMER TO METER CENTER.
6. MAXIMUM HEIGHT TO CENTERLINE OF TOP METER SOCKET SHALL BE 6'-0" AFG.
7. MINIMUM HEIGHT TO BOTTOM OF METER SOCKET ASSEMBLY SHALL BE 2'-0" AFG.
8. SEE FEEDER SCHEDULE, THIS SHEET FOR SIZES TO APARTMENT UNIT LOAD CENTERS.
9. SEE 1:E6.2 FOR CONTINUATION.
10. (4)#4/0, #4G., 2-1/2"C.
11. (4)#1, #8G., 1-1/2"C.
12. (4)#1/0, #6G., 2"C.
13. (3)#350 KCMIL, #350 KCMIL G., 3"C.
14. (2) PARALLEL 3" CONDUITS, EACH WITH (4) #350 KCMIL, #1G COPPER FROM 'SDS' TO PANEL 'H1'.
15. CT ENCLOSURE (35"x29"x12") PER OPPD REQUIREMENTS. PROVIDE 3/4" EXTERIOR PLYWOOD BACKING.
16. CT RATED METER PROVIDED BY UTILITY, INSTALLED BY E.C. PROVIDE SUPPLY SIDE BONDING JUMPER TO HOUSE METER PER OPPD REQUIREMENTS.
17. SDS' - 600A/3P SERVICE ENTRANCE RATED DISCONECT SWITCH WITH SOLID NEUTRAL AND (3) 600A DUAL-ELEMENT, TIME-DELAY, CLASS 'RK1' FUSES IN NEMA 3R ENCLOSURE. PROVIDE SIGNAGE AT DISCONNECT SWITCH TO READ 'SERVICE DISCONNECT 2 OF 2'
18. (2) PARALLEL 4" CONDUITS EACH WITH (4) #350 KCMIL COPPER FROM TRANSFORMER TO CT ENCLOSURE.
19. #1 CU GROUNDING ELECTRODE CONDUCTOR TO CONCRETE ENCASED ELECTRODE, UNDERGROUND METAL WATER PIPE, AND DRIVEN GROUND ROD. BOND ALL ITEMS IN ACCORDANCE WITH NEC ARTICLE 250.
20. 2" CONDUIT FOR POWER COMPANY PROVIDED METER WIRING.
21. (2) PARALLEL 4" CONDUITS EACH WITH (4) #350 KCMIL COPPER

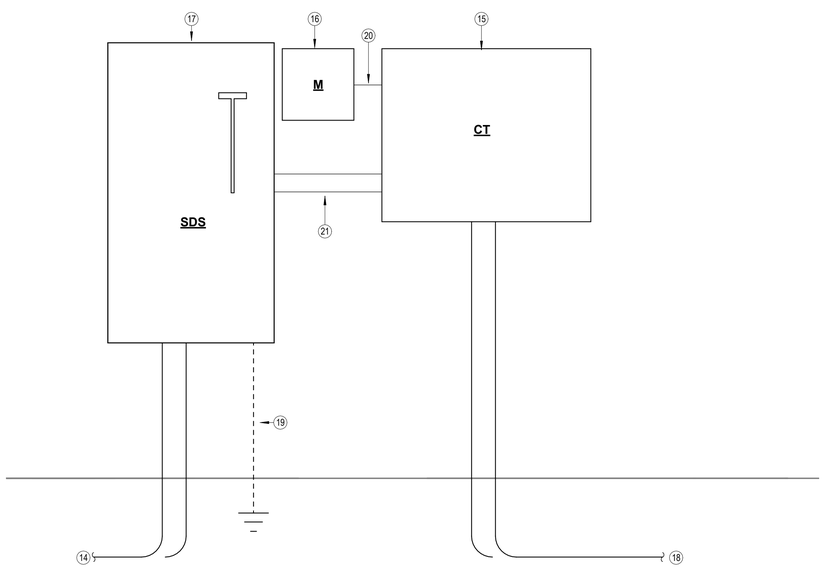

2 HOUSE ELECTRIC SERVICE RISER DIAGRAM

1" = 1'-0"

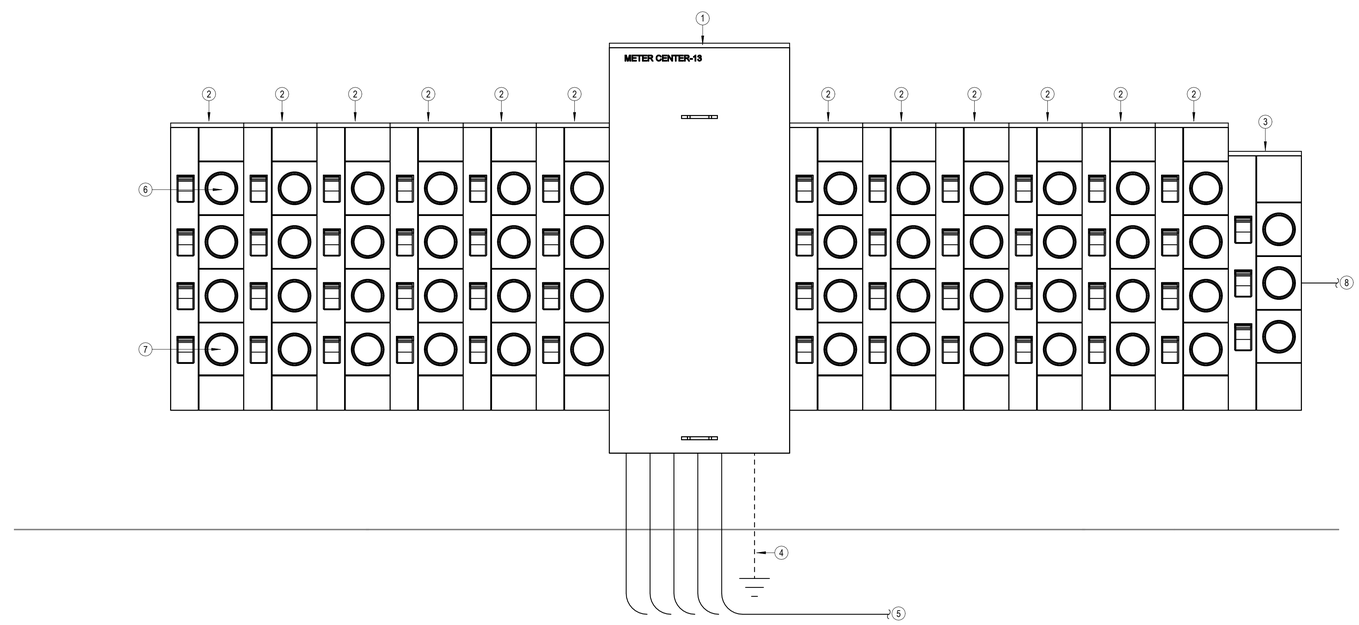

1 APARTMENT ELECTRIC SERVICE RISER DIAGRAM

1" = 1'-0"

JonesGillamRenz
730 N. Ninth
Salina, KS 67401
785.827.0386
1881 Main Street, Suite 301
Kansas City, MO 64108
jgr@jgrarchitects.com

THE RESIDENCE AT CARTER LAKE

NEW SENIOR LIVING FACILITY

CARTER LAKE, IOWA

LICENSED PROFESSIONAL ENGINEER
TIMOTHY C. TREDWAY
21578
IOWA
08/01/2025

REVISIONS:

DATE: 8-1-2025
JOB: 25-3489
SHEET NO.:

E6.2

COPYRIGHTED ©

LST Consulting Engineers, PA
MANHATTAN
4809 Vue Du Lac Place, Suite 201
Manhattan, KS 66503
785.587.8042
WICHITA
125 S. Washington, Suite 150
Wichita, KS 67202
316.285.0696
www.LSTengineers.com
mail@LSTengineers.com

Project 25039 **8-1-2025**

Designation: 1B

Installed Location:
Voltage: 120/208 1PH 3W-1Ph-3W
Mounting: Flush
Enclosure: NEMA 1

Bus Amps: 150
MCB Amps: MLO
Features & Modifications: -

SCCR/AIC: 22.0 kA
Mains FN/Note: -

Ckt	Description	Circuitry	Trip (A)	FN	A		B		FN	Trip (A)	Circuitry	Description	Ckt
1B:1	Kitchen Receptacles	1/2"C,1#12,#12N,#12G	20	GA	4.5 A	0.0 A				20	1/2"C,2#12,#12G	Electric Water Heating	1B:2
1B:3	Kitchen Receptacles	1/2"C,1#12,#12N,#12G	20	GA			8.7 A	0.0 A					1B:4
1B:5	Dishwasher	1/2"C,1#12,#12N,#12G	20		4.2 A	40....			G	60	1"C,2#4,#4N,#10G	Clothes Dryer	1B:6
1B:7	Refrigerator	1/2"C,1#12,#12N,#12G	20	GA			1.5 A	40....					1B:8
1B:9	Living Room Receptacles	1/2"C,1#12,#12N,#12G	20	A	9.0 A	40....			G	60	1"C,2#4,#4N,#10G	Range	1B:10
1B:11	Kitchen/Living/Hall Lighting	1/2"C,1#12,#12N,#12G	20	A			1.3 A	40....					1B:12
1B:13	Hood/Microwave	1/2"C,1#12,#12N,#12G	20	GA	2.1 A	30....				40	1/2"C,2#8,#10G	Motor	1B:14
1B:15	Clothes Washer Receptacle	1/2"C,1#12,#12N,#12G	20	GA			1.5 A	30....					1B:16
1B:17	Bathroom	1/2"C,1#12,#12N,#12G	20	G	2.9 A	18....				30	1/2"C,2#10,#10G	Heat Pump	1B:18
1B:19	Bedroom	1/2"C,1#12,#12N,#12G	20	A			8.0 A	18....					1B:20
1B:21	Spare	--	20		0.0 A	0.0 A				20	--	Surge Protection	1B:22
1B:23	Space	--	--				--	0.0 A		20	--	Surge Protection	1B:24

Panelboard: H1

Location: MECH 131
Supply: Utility Transformer
Mounting: Surface
Enclosure: NEMA 1
Features & Modifications: PROVIDE INTEGRAL SURGE PROTECTION

Voltage: 208 V, 3 Ø, 4 W
Bus Rating: 600 A
Neutral: 100%
Mains Type: MCB
Mains Rating: 600 A
Mains FN/Note: -
SCCR: 42 kA

Ckt	Description	Frame (A)	Trip (A)	Poles	FN/Note	Load
H1:1	P1	225	225	3		53614
H1:2	P2	100	100	3		11863
H1:3	P3	150	150	3		51519
H1:4	Elevator	300	300	3		81000
H1:5	Space	--	--	3		--
H1:6	Space	--	--	3		--

Load Summary

Load Classification	Connected	Factor	Demand	Panel Totals	
Motor	4654 VA	107.60%	5008 VA	**Connected Load:**	198 kVA
Other	1440 VA	100.00%	1440 VA	**Connected Current:**	550 A
Lighting - Interior	6522 VA	125.00%	8153 VA	**Demand Load:**	210 kVA
Receptacle - General	19620 VA	75.48%	14810 VA	**Demand Current:**	582 A
Electric Water Heating	4500 VA	125.00%	5625 VA	**Non-Coincident...**	75.1 A
Electric Heat	53220 VA	125.00%	66525 VA	**Total Est. Demand ...**	506.7 A
Elevator	81000 VA	100.00%	81000 VA		
Cooling	27040 VA	100.00%	27040 VA		

Notes:

Breaker Function Schedule

#	For any number, see panel schedule footer note
A	Arc-Fault Interrupter (AFCI) Protection
G	Ground-Fault Circuit Interrupter (GFCI) Protection (5 mA)
GA	Combination Ground-Fault Circuit Interrupter (GFCI) Protection (5 mA) and Arc-Fault Interrupter (AFCI) Protection
L	Lockable open according to NEC 110.25

Designation: 2B

Installed Location:
Voltage: 120/208 1PH 3W-1Ph-3W
Mounting: Flush
Enclosure: NEMA 1

Bus Amps: 150
MCB Amps: MLO
Features & Modifications: -

SCCR/AIC: 22.0 kA
Mains FN/Note: -

Ckt	Description	Circuitry	Trip (A)	FN	A		B		FN	Trip (A)	Circuitry	Description	Ckt
2B:1	Kitchen Receptacles	1/2"C,1#12,#12N,#12G	20	GA	8.7 A	0.0 A				20	1/2"C,2#12,#12G	Electric Water Heating	2B:2
2B:3	Kitchen Receptacles	1/2"C,1#12,#12N,#12G	20	GA			3.0 A	0.0 A					2B:4
2B:5	Dishwasher	1/2"C,1#12,#12N,#12G	20	GA	4.2 A	40....			G	60	1"C,2#4,#4N,#10G	Clothes Dryer	2B:6
2B:7	Refrigerator	1/2"C,1#12,#12N,#12G	20	GA			1.5 A	40....					2B:8
2B:9	Living Room Receptacles	1/2"C,1#12,#12N,#12G	20	A	9.0 A	40....			G	60	1"C,2#4,#4N,#10G	Range	2B:10
2B:11	Kitchen/Living/Hall Lighting	1/2"C,1#12,#12N,#12G	20	A			1.3 A	40....					2B:12
2B:13	Hood/Microwave	1/2"C,1#12,#12N,#12G	20	GA	2.1 A	30....				40	1/2"C,2#8,#10G	Blower Coil	2B:14
2B:15	Clothes Washer Receptacle	1/2"C,1#12,#12N,#12G	20	GA			1.5 A	30....					2B:16
2B:17	Bathroom	1/2"C,1#12,#12N,#12G	20	G	2.9 A	18....				30	1/2"C,2#10,#10G	Heat Pump	2B:18
2B:19	Bedroom 1	1/2"C,1#12,#12N,#12G	20	A			8.0 A	18....					2B:20
2B:21	Bedroom 2	1/2"C,1#12,#12N,#12G	20	A	8.0 A	0.0 A				20	--	Surge Protection	2B:22
2B:23	Spare	--	20				0.0 A	0.0 A		20	--	Surge Protection	2B:24

Designation: P1

Installed Location: MECH 131
Voltage: 208Y/120 3PH 4W-3Ph-4W
Mounting: Surface
Enclosure: NEMA 1

Bus Amps: 225
MCB Amps: MLO
Features & Modifications: PROVIDE INTEGRAL SURGE PROTECTION

SCCR/AIC: 22.0 kA
Mains FN/Note: -

Ckt	Description	Circuitry	Trip (A)	FN	A		B		C		FN	Trip (A)	Circuitry	Description	Ckt
P1:1	LTS - 119, 120, 121	1/2"C,1#12,#12N,#12G	20		28...	36...						20	1/2"C,1#12,#12N,#12G	RCPT - 119, 120	P1:2
P1:3	LTS - 124 Community	1/2"C,1#12,#12N,#12G	20				59...	54...				20	1/2"C,1#12,#12N,#12G	RCPT - 121	P1:4
P1:5	LTS - 126-131, Stair S2	1/2"C,1#12,#12N,#12G	20						79...	54...		20	1/2"C,1#12,#12N,#12G	RCPT - 121, S2	P1:6
P1:7	LTS - 132, Stair S3	1/2"C,1#12,#12N,#12G	20		17...	72...						20	1/2"C,1#12,#12N,#12G	RCPT - West 124	P1:8
P1:9	LTS - Exterior Wall Packs	1/2"C,1#12,#12N,#12G	20				11...	90...				20	1/2"C,1#12,#12N,#12G	RCPT - East 124	P1:10
P1:11	LTS - Exterior Wall Sconces	1/2"C,1#12,#12N,#12G	20						68...	18...		20	1/2"C,1#12,#12N,#12G	RCPT - Refrigerator	P1:12
P1:13	LTS - South/East Parking Lot	1/2"C,2#12,#12G	20		51...	36...						20	1/2"C,1#12,#12N,#12G	RCPT - Countertop	P1:14
P1:15							51...	36...				20	1/2"C,1#12,#12N,#12G	RCPT - Countertop	P1:16
P1:17	LTS - North Parking Lot	1/2"C,2#12,#12G	20						37...	18...		20	1/2"C,1#12,#12N,#12G	RCPT - Dishwasher	P1:18
P1:19					37...	72...						20	1/2"C,1#12,#12N,#12G	RCPT - 125	P1:20
P1:21	LTS - Monument Sign	1/2"C,1#12,#12N,#12G	20				22...	54...				20	1/2"C,1#12,#12N,#12G	RCPT - 127, 128, 129	P1:22
P1:23	Exterior Lighting Controls	1/2"C,1#12,#12N,#12G	20						0 VA	54...		20	1/2"C,1#12,#12N,#12G	RCPT - 132	P1:24
P1:25	LTS - Elevator Pit	1/2"C,1#12,#12N,#12G	20		24...	18...						20	1/2"C,1#12,#12N,#12G	Drinking Fountain	P1:26
P1:27	RCPT - Elevator Pit	1/2"C,1#12,#12N,#12G	20				18...	36...			L	20	1/2"C,1#12,#12N,#12G	Fire Alarm Flow Switches	P1:28
P1:29	Elevator Pit Sump Pump	1/2"C,1#12,#12N,#12G	20						18...	36...	L	20	1/2"C,1#12,#12N,#12G	Fire Alarm Control Panel	P1:30
P1:31	RCPT - Exterior	1/2"C,1#12,#12N,#12G	20		90...	22...						30	1/2"C,2#10,#10G	Water Heater 'HWH-B'	P1:32
P1:33	Blower Coil 'BC-1C'	3/4"C,2#6,#10G	50				38...	22...							P1:34
P1:35	1st Floor Halls/Mezzanine								38...	11...		20	1/2"C,1#12,#12N,#12G	Hot Water Recirculation Pump 'HWP'	P1:36
P1:37	Blower Coil 'BC-2'	3/4"C,2#4,#10G	60		43...	15...						20	1/2"C,2#10,#10G	Electric Heater 'EWH' - Stair S1	P1:38
P1:39	Community Room						43...	15...							P1:40
P1:41	Blower Coil 'BC-1B'	1/2"C,2#6,#10G	40						31...	15...		20	1/2"C,2#12,#12G	Electric Heater 'EWH-B' - Stair S2	P1:42
P1:43	Stair S2				31...	15...									P1:44
P1:45	Spare	--	20			0 VA	15...					20	1/2"C,2#10,#10G	Electric Heater 'EWH-B' - Stair S3	P1:46
P1:47	Spare	--	20					0 VA	15...						P1:48
P1:49	Spare	--	20		0 VA	15...						20	1/2"C,2#8,#8G	Electric Heater 'EWH-B' - 119	P1:50
P1:51	Space	--	--				--	15...							P1:52
P1:53	Space	--	--						--	15...		20	1/2"C,1#8,#8N,#8G	Electric Heater 'HWH-A' - 120	P1:54
P1:55	Space	--	--		--	--						--	--	Space	P1:56
P1:57	Space	--	--				--	--				--	--	Space	P1:58
P1:59	Space	--	--						--	--		--	--	Space	P1:60
					Connected Load:		18835 VA		19267 VA		15512 VA				
					Connected Amps:		161.2 A		164.8 A		129.3 A				

Designation: P3

Installed Location: MECH 325
Voltage: 208Y/120 3PH 4W-3Ph-4W
Mounting: Surface
Enclosure: NEMA 1

Bus Amps: 150
MCB Amps: MLO
Features & Modifications: PROVIDE INTEGRAL SURGE PROTECTION

SCCR/AIC: 22.0 kA
Mains FN/Note: -

Ckt	Description	Circuitry	Trip (A)	FN	A		B		C		FN	Trip (A)	Circuitry	Description	Ckt
P3:1	LTS - 319, 320 West, 324, 325, Stair S1	1/2"C,1#12,#12N,#12G	20		36...	10...						20	1/2"C,1#12,#12N,#12G	RCPT - 319, 320 West, 324, 325, Stair S1	P3:2
P3:3	LST - 320 East, Stair S2, Stair S3	1/2"C,1#12,#12N,#12G	20				43...	10...				20	1/2"C,1#12,#12N,#12G	RCPT - 320 East, Stair S2, Stair S3	P3:4
P3:5	LTS - Fitness/Multipurpose	1/2"C,1#12,#12N,#12G	20						35...	18...		20	1/2"C,1#12,#12N,#12G	RCPT - Fitness West	P3:6
P3:7	RCPT - Multipurpose S/E	1/2"C,1#12,#12N,#12G	20		54...	18...						20	1/2"C,1#12,#12N,#12G	RCPT - Fitness West	P3:8
P3:9	RCPT - Multipurpose N/W	1/2"C,1#12,#12N,#12G	20				54...	18...				20	1/2"C,1#12,#12N,#12G	RCPT - Fitness West	P3:10
P3:11	RCPT - Roof West	1/2"C,1#12,#12N,#12G	20						72...	54...		20	1/2"C,1#12,#12N,#12G	RCPT - Fitness N/E	P3:12
P3:13	RCPT - Roof East	1/2"C,1#12,#12N,#12G	20		72...	18...						20	1/2"C,1#12,#12N,#12G	RCPT - Fitness Drinking Fountain	P3:14
P3:15	RCPT - Future Radon Roof	1/2"C,1#12,#12N,#12G	20				90...	72...				20	1/2"C,1#12,#12N,#12G	RCPT - 322	P3:16
P3:17	LTS - Elevator Hoistway	1/2"C,1#12,#12N,#12G	20						24...	18...		20	1/2"C,2#12,#12G	Heat Pump 'HP-1'	P3:18
P3:19	RCPT - Elevator Hoistway	1/2"C,1#12,#12N,#12G	20		18...	18...								1st Floor Halls	P3:20
P3:21	Heat Pump 'HP-2'	1/2"C,2#10,#10G	30				30...	18...				20	1/2"C,2#12,#12G	Heat Pump 'HP-1'	P3:22
P3:23	Fitness/Multipurpose								30...	18...				2nd Floor Halls	P3:24
P3:25	Blower Coil 'BC-2'	3/4"C,2#4,#10G	60		38...	18...						20	1/2"C,2#12,#12G	Heat Pump 'HP-1'	P3:26
P3:27	Fitness/Multipurpose						38...	18...						Stair S2	P3:28
P3:29	Heat Pump 'HP-1'	1/2"C,2#12,#12G	20						18...	31...		40	1/2"C,2#8,#10G	Blower Coil 'BC-1B'	P3:30
P3:31	3rd Floor Halls				18...	31...								3rd Floor Halls	P3:32
P3:33	Condensing Unit 'CU-2'	1/2"C,2#8,#10G	40				30...	15...				20	1/2"C,1#8,#8N,#8G	Electric Heater 'HWH-A' - 319	P3:34
P3:35	Community Room								30...	--		--	--	Space	P3:36
P3:37	Spare	--	20		0 VA	--						--	--	Space	P3:38
P3:39	Spare	--	20			0 VA	--					--	--	Space	P3:40
P3:41	Spare	--	20						0 VA	--		--	--	Space	P3:42
					Connected Load:		15895 VA		18990 VA		16634 VA				
					Connected Amps:		132.5 A		159.2 A		139.6 A				

Designation: P2

Installed Location: MECH 108
Voltage: 208Y/120 3PH 4W-3Ph-4W
Mounting: Surface
Enclosure: NEMA 1

Bus Amps: 100
MCB Amps: MLO
Features & Modifications: PROVIDE INTEGRAL SURGE PROTECTION

SCCR/AIC: 22.0 kA
Mains FN/Note: -

Ckt	Description	Circuitry	Trip (A)	FN	A		B		C		FN	Trip (A)	Circuitry	Description	Ckt
P2:1	LTS - 219, 220, Stair S1	1/2"C,1#12,#12N,#12G	20		29...	72...						20	1/2"C,1#12,#12N,#12G	RCPT - 219, 220	P2:2
P2:3	LTS - 223, 224, 226, Stair S2	1/2"C,1#12,#12N,#12G	20				45...	54...				20	1/2"C,1#12,#12N,#12G	RCPT - 224, 226, Stair S2	P2:4
P2:5	LTS - 225, Stair S3	1/2"C,1#12,#12N,#12G	20						21...	54...		20	1/2"C,1#12,#12N,#12G	RCPT - 225	P2:6
P2:7	RCPT - 223 N/W	1/2"C,1#12,#12N,#12G	20		72...	54...						20	1/2"C,1#12,#12N,#12G	RCPT - 223 S/E	P2:8
P2:9	Elevator Cab Lights	1/2"C,1#12,#12N,#12G	20				36...	72...				20	1/2"C,1#12,#12N,#12G	RCPT - IT 222	P2:10
P2:11	Elevator Shunt Trip	1/2"C,1#12,#12N,#12G	20						36...	20...		30	1/2"C,2#10,#10G	Blower Coil 'BC-1A'	P2:12
P2:13	RCPT - Telecom Backboard	1/2"C,1#12,#12N,#12G	20		72...	20...								2nd Floor Halls	P2:14
P2:15	Electric Heater 'HWH-A' - 219	1/2"C,1#8,#8N,#8G	20				15...	--				--	--	Space	P2:16
P2:17	Space	--	--						--	--		--	--	Space	P2:18
P2:19	Space	--	--		--	--						--	--	Space	P2:20
P2:21	Space	--	--				--	--				--	--	Space	P2:22
P2:23	Space	--	--						--	--		--	--	Space	P2:24
					Connected Load:		5081 VA		3578 VA		3204 VA				
					Connected Amps:		42.8 A		30.3 A		26.7 A				

JonesGillamRenz
730 N. Ninth
Salina, KS 67401
785.827.0386
1881 Main Street, Suite 301
Kansas City, MO 64108
jgr@jgrarchitects.com

THE RESIDENCE AT CARTER LAKE
NEW SENIOR LIVING FACILITY
CARTER LAKE, IOWA

LICENSED PROFESSIONAL ENGINEER
TIMOTHY C. TREDWAY
21578
IOWA
08/01/2025

REVISIONS:

DATE: 8-1-2025
JOB: 25-3489
SHEET NO.:

E6.3

COPYRIGHTED ©

LST Consulting Engineers, PA
MANHATTAN
4809 Vue Du Lac Place, Suite 201
Manhattan, KS 66503
785.587.8042
WICHITA
125 S. Washington, Suite 150
Wichita, KS 67202
316.285.0696
www.LSTengineers.com
mail@LSTengineers.com

Project 25039 **8-1-2025**

General Plan Symbols

- Plan Revision Number
- Detail Number on Sheet / Sheet Number Where Detail is Placed
- Keynote Symbol
- Continuation Symbol
- Point Where New Connects To Existing
- Room 1 — Room Name / Number
- Area Being Demolished
- Area Not In Contract
- Electrical Equipment. Do not route HVAC installation above or below equipment. Maintain working clearance as indicated by dashed line.

Abbreviations

Ø	ROUND	LVR	LOUVER
ABV	ABOVE	LWT	LEAVING WATER TEMPERATURE
AC	AIR CONDITIONING	M/A	MIXED AIR
AD	AREA DRAIN	MAX	MAXIMUM
ADD	ADDENDUM	MBH	ONE THOUSAND BTU PER HOUR
AFF	ABOVE FINISHED FLOOR	MCF	ONE THOUSAND CUBIC FEET
AFUE	ANNUAL FUEL UTILIZATION EFFICIENCY	MD	MOTORIZED DAMPER
ALT	ALTERNATE	MECH	MECHANICAL
AP	ACCESS PANEL	MFR	MANUFACTURER
ARCH	ARCHITECT/ARCHITECTURAL	MIN	MINIMUM
BFF	BELOW FINISHED FLOOR	MISC	MISCELLANEOUS
BLW	BELOW	MTR	MOTOR
BTU	BRITISH THERMAL UNITS	MU/A	MAKE-UP/AIR
BTUH	BRITISH THERMAL UNITS PER HOUR	NC	NOISE CRITERIA
CAP	CAPACITY	NC	NORMALLY CLOSED
CB	CATCH BASIN	NIC	NOT IN CONTRACT
CFM	CUBIC FEET PER MINUTE	NO	NUMBER
CLG	CEILING	NO	NORMALLY OPEN
CO	CLEAN OUT	NTS	NOT TO SCALE
CW	COLD WATER	O	OXYGEN
D	DEGREE	O/A	OUTSIDE AIR
DB	DRY BULB	ORD	OVERFLOW ROOF DRAIN
DIA	DIAMETER	PD	PRESSURE DROP
DN	DOWN	PIV	POST INDICATOR VALVE
DW	DISTILLED WATER	PLBG	PLUMBING
EA	EACH	PRESS	PRESSURE
EAT	ENTERING AIR TEMPERATURE	PRV	PRESSURE REDUCING VALVE
ELEC	ELECTRICAL	PSI	POUNDS PER SQUARE INCH
EQUIP	EQUIPMENT	PSIG	POUNDS PER SQUARE INCH GAUGE
EWC	ELECTRIC WATER COOLER	PWR	POWER
EWT	ENTERING WATER TEMPERATURE	R	DUCT RISER
E/A	EXHAUST AIR	R/A	RETURN AIR
EXIST	EXISTING	RCP	RADIANT CEILING PANEL
F	DEGREES FAHRENHEIT	RD	ROOF DRAIN
FCO	FLOOR CLEAN OUT	REC	RECESSED
FD	FLOOR DRAIN	RED	REDUCER
FDC	FIRE DEPARTMENT CONNECTION	RH	RELATIVE HUMIDITY
FL	FLOOR	RL/A	RELIEF AIR
FO	FUEL OIL	RM	ROOM
FOV	FUEL OIL VENT	RPM	REVOLUTIONS PER MINUTE
FOR	FUEL OIL RETURN	RW	RAIN WATER
FOS	FUEL OIL SUPPLY	SF	SQUARE FOOT
FPM	FEET PER MINUTE	S/A	SUPPLY AIR
FS	FLOOR SINK	SAN	SANITARY
FT	FOOT/FEET	SF	SQUARE FOOT
FTR	FIN TUBE RADIATION	SD	SMOKE DAMPER
GAL	GALLON	SM	SURFACE MOUNT
GF	GAS-FIRED	SP	STANDPIPE
GC	GENERAL CONTRACTOR	SP	STATIC PRESSURE
GPM	GALLONS PER MINUTE	STM	STEAM
GW	GREASE WASTE	T	THERMOSTAT
HB	HOSE BIB	TD	TEMPERATURE DROP
HP	HORSE POWER	TDR	TRENCH DRAIN
HTG	HEATING	TEMP	TEMPERATURE
HTR	HEATER	TYP	TYPICAL
HW	HOT WATER	UG	UNDERGROUND
HYD	HYDRANT	VAC	VACUUM
ID	INDIRECT	V	VENT
IN	INCH	VAV	VARIABLE AIR VOLUME
INV	INVERT	VENT	VENTILATION
LB	POUND	VTR	VENT THROUGH ROOF
LB/HR	POUNDS PER HOUR	W	WASTE
LAT	LEAVING AIR TEMPERATURE	WB	WET BULB
LP	LOW PRESSURE	WCO	WALL CLEAN OUT
LPG	LIQUEFIED PETROLEUM GAS	WH	WALL HYDRANT

Equipment Abbreviations

AC	AIR CONDITIONING UNIT	ET	EXPANSION TANK
ACCU	AIR COOLING CONDENSING UNIT	EWH	ELECTRIC WATER HEATER
AHU	AIR HANDLING UNIT	FCU	FAN COIL UNIT
AS	AIR SEPARATOR	FP	FIRE PUMP
B	BOILER	GI	GREASE INTERCEPTOR
CH	CHILLER	GRV	GRAVITY ROOF VENTILATOR
CT	COOLING TOWER	HWP	HEATING WATER PUMP
CUH	CABINET UNIT HEATER	HRU	HEAT RECOVERY UNIT
CHWP	CHILLED WATER PUMP	PRV	POWER ROOF VENTILATOR
DBP	DOMESTIC WATER BOOSTER PUMP	RE	RETURN/EXHAUST FAN
DC	DUCT MOUNTED COIL	RTU	ROOFTOP UNIT
DCP	DOMESTIC WATER CIRCULATING PUMP	SP	SUMP PUMP
EF	EXHAUST FAN	UH	UNIT HEATER
EDC	ELECTRIC DUCT COIL	WH	WATER HEATER

* NOTE *
ALL OF GENERAL NOTES ON THIS SHEET ARE TO BE APPLIED TO ALL OTHER DRAWINGS IN THIS SET.THE SYMBOLS AND ABBREVIATIONS SHOWN ON THIS SHEET MAY OR MAY NOT BE USED IN THIS SET OF DRAWINGS.

HVAC Symbols

- 24"/12" — Sq. Duct Size (Width/Height)
- 24"x12"FO — Oval Duct Size (Width x Height)
- 18"Ø — Round Duct Size (Diameter)
- (E) — Existing Duct To Remain
- Duct To Be Demolished
- S/A — Supply Air
- V/A — Ventilation Air
- O/A — Outdoor Air
- R/A — Return Air
- T/A — Transfer Air
- E/A — General Exhaust Air
- KED — Kitchen Exhaust Duct
- FLUE — Flue Gas Vent
- C/A — Combustion Air
- Rect. Supply Duct Rise / Drop
- Round Supply Duct Rise / Drop
- Rect. Return Duct Rise / Drop
- Round Return Duct Rise / Drop
- Rect. Exhaust Duct Rise / Drop
- Round Exhaust Duct Rise / Drop

Grille, Register, Diffusers

Square Ceiling Diffuser — CD- 500 / 10"Ø/24x24 — Type (See Schedule); Airflow; Neck Size / Module Size

Round Ceiling Diffuser — CD11 100 / 8"Ø / TYP. X 4 — Type (See Schedule); Airflow; Neck Size; Type Count for Space

Sidewall Supply Grille — SG5 300 / 48"x12" / AFF:0" — Type (See Schedule); Airflow; Nominal Duct Size; Mounting Elevation (Centerline)

Linear Diffuser — SD- 200 / 8"Ø/2s/4'-0"L — Type (See Schedule); Airflow; Neck Size/ Slot(s)/ Active Length

Sidewall Return Grille — RG6 200 / 12"x6" / AFF:0" — Type (See Schedule); Airflow; Nominal Duct Size; Mounting Elevation (Centerline)

Ceiling Return — CR2 200 / 8"Ø/24x24 — Type (See Schedule); Airflow; Neck Size / Module Size

Mechanical Equipment

- RTU-1 — Unit Identity
- E)AHU-2 — Existing to Remain Equipment
- R)AHU-3 — Existing Relocated Equipment
- Equipment By Others (Refer To Other Disciplines)

Mechanical Control Devices

- T — Thermostat
- H — Humidistat
- TS — Temperature Sensor
- HS — Humidity Sensor
- CO2 — Carbon Dioxide Detector
- HZG — Hazardous Gas Detector

Damper Types

- B — Manual Damper
- M — Motorized Damper
- G — Backdraft Damper
- S — Smoke Damper
- Fire Damper
- S — Comb. Fire/ Smoke Damper

HVAC SHEET INDEX

M0.1	HVAC TITLE SHEET
M1.1	HVAC PLANS 1ST AND 2ND
M1.2	HVAC PLANS 3RD
M4.1	ENLARGED HVAC PLANS
M6.1	HVAC SCHEDULES
M9.1	HVAC RISERS
ME1.1	M/E SITE PLAN
ME1.2	M/E ROOF PLAN

GENERAL HVAC NOTES

A. CONTRACTOR SHALL LOCATE THERMOSTATS AND HUMIDISTATS AT 4'-0" AFF UNLESS NOTED OTHERWISE. MAINTAIN A MINIMUM HORIZONTAL SEPARATION OF 8" FROM LIGHT SWITCHES.
B. CONDENSATE DRAINS SHALL BE SUPPLIED FOR ALL COOLING EQUIPMENT. CONTRACTOR SHALL ENSURE PROPER INSTALLATION AND DRAINAGE AS REQUIRED BY FEDERAL, STATE, AND LOCAL CODES. CONDENSATE PIPING SHALL BE TYPE "L" COPPER. WHERE INSTALLED ABOVE CEILINGS, CONDENSATE DRAIN PIPING SHALL BE INSULATED WITH MINIMUM 1/2" FIBERGLASS PIPE INSULATION WITH ALL SERVICE JACKET.
C. ALL SUPPLY, RETURN, AND EXHAUST DUCTWORK SHALL BE RATED FOR PRESSURE CLASS OF 2" W.G. UNLESS NOTED OTHERWISE.
D. COORDINATE THE EXACT LOCATION OF ALL CEILING DIFFUSERS, REGISTERS, AND GRILLES WITH LIGHTING.
E. PROVIDE DIFFUSERS AND REGISTERS WITH 4-WAY BLOW PATTERN UNLESS OTHERWISE NOTED.
F. HVAC EQUIPMENT SHALL NOT BE UTILIZED UNTIL ALL DUCT PRODUCING CONSTRUCTION ACTIVITY HAS BEEN COMPLETED. CONTRACTOR SHALL BE REQUIRED TO OBTAIN APPROVAL FROM OWNER PRIOR TO EQUIPMENT STARTUP, AND TO REPLACE FILTERS ON HVAC EQUIPMENT UPON FINAL COMPLETION.
G. LOCATIONS OF PIPING, DUCTWORK AND EQUIPMENT AS INDICATED ON THE DRAWINGS ARE APPROXIMATE AND SUBJECT TO MINOR ADJUSTMENTS IN THE FIELD. WORK SHALL BE COORDINATED WITH ALL OTHER TRADES TO AVOID INTERFERENCE IN THE FIELD.
H. FINAL PRODUCT SHALL BE A COMPLETE AND FUNCTIONING SYSTEM, AND SHALL CONFORM TO ALL REQUIREMENTS OF APPLICABLE FEDERAL, STATE, AND LOCAL CODES, INCLUDING BUT NOT LIMITED TO THE INTERNATIONAL BUILDING CODE AND INTERNATIONAL MECHANICAL CODE.
I. LOCATE EQUIPMENT REQUIRING ACCESS 2'-0" MAXIMUM ABOVE CEILING.
J. ALL ROOF MOUNTED EQUIPMENT SHALL BE A MINIMUM 10'-0" FROM EDGE OF ROOFS WITHOUT A 42" HIGH PARAPET OR GUARD RAIL. WHERE PROVIDING 10'-0" SEPARATION FROM ROOF EDGE IS NOT POSSIBLE, PROVIDE PERMANENT FALL ARREST ANCHORS COMPLIANT WITH ANSI/ASSP Z359.1. COORDINATE WITH GENERAL CONTRACTOR.
K. LOCATE DUCTWORK, PIPING AND MECHANICAL EQUIPMENT OUTSIDE OF THE NEC REQUIRED CLEAR SPACE ABOVE AND AROUND ELECTRICAL PANELS, TRANSFORMERS AND OTHER ELECTRICAL EQUIPMENT. COORDINATE WITH ELECTRICAL CONTRACTOR.
L. PENETRATIONS OF RATED ASSEMBLIES SHALL BE FIRE STOPPED. FIRE STOPPING SHALL BE U.L. LISTED. SEE ARCHITECTURAL DRAWINGS FOR LOCATIONS OF RATED ASSEMBLIES.
M. PROVIDE SLEEVES AND/OR OPENINGS TO RUN PIPES AND DUCTS THROUGH FOUNDATIONS, FLOORS, WALLS, AND ROOF.
N. MAINTAIN CLEAR ACCESS TO SERVICE EQUIPMENT AND OTHER ACCESSORIES REQUIRING SERVICE, VISUAL INSPECTION OR HAND OPERATION. WHERE INDICATED OR REQUIRED, PROVIDE ACCESS PANELS OF THE TYPE SELECTED TO SUIT MATERIALS IN WHICH INSTALLED.
O. TRANSITION FROM PIPING AND DUCTWORK SIZES SHOWN TO PROPERLY CONNECT TO MECHANICAL EQUIPMENT.
P. PIPE SIZES SHOWN SHALL BE CONTINUED IN THE DIRECTION OF FLOW UNTIL ANOTHER SIZE IS SHOWN.
Q. INSTALL ALL EQUIPMENT IN ACCORDANCE WITH THE RESPECTIVE MANUFACTURER'S WRITTEN INSTALLATION INSTRUCTIONS, AT A LEVEL OF QUALITY AND WORKMANSHIP CONSISTENT WITH THE SPECIFICATIONS.
R. INSTALL EXPOSED PIPING AND DUCTWORK AS HIGH AS PRACTICAL IN ROOMS WITHOUT CEILINGS.
S. PRIOR TO STARTING WORK, SUBMIT SHOP DRAWINGS FOR ALL MECHANICAL EQUIPMENT AND MATERIALS. SUBSTITUTE EQUIPMENT INSTALLED WITHOUT PRIOR APPROVAL SHALL BE SUBJECT TO REPLACEMENT AT CONTRACTOR'S EXPENSE.
T. CONTRACTOR SHALL OBTAIN AND PAY FOR ALL NECESSARY PERMITS AND SHALL ARRANGE FOR ALL INSPECTIONS AS REQUIRED.
U. PROVIDE ONE YEAR WARRANTY FOR ALL WORKMANSHIP AND MATERIALS AFTER THE DATE OF FINAL ACCEPTANCE.

GENERAL MECHANICAL DEMOLITION NOTES

A. ALL PIPING TAKEN OUT OF SERVICE SHALL BE REMOVED. WHERE PIPING TO BE REMOVED IS CONNECTED TO EXISTING PIPING TO REMAIN, PIPING SHALL BE REMOVED BACK TO MAIN AND CAPPED, UNLESS INDICATED OTHERWISE. CONTRACTOR SHALL DISPOSE OF PIPING OR DELIVER TO OWNER, AS DIRECTED BY OWNER.
B. WHERE PIPING TAKEN OUT OF SERVICE IS LOCATED BELOW SLAB AND IS UNABLE TO BE REMOVED, CAP BELOW SLAB.
C. ALL DUCTWORK TAKEN OUT OF SERVICE SHALL BE REMOVED.
D. COORDINATE CUTTING, PATCHING OF EXISTING WALLS, CEILINGS, ROOF AND FLOORS AFFECTED BY MECHANICAL DEMOLITION WITH G.C.
E. ALL EQUIPMENT TAKEN OUT OF SERVICE SHALL BE REMOVED. EQUIPMENT SHALL BE DELIVERED TO OWNER OR DISPOSED OF AS DIRECTED BY OWNER.
F. REMOVE ALL MECHANICAL INSTALLATION FROM PROJECT AREA, UNLESS REQUIRED FOR NEW WORK OR EXISTING INSTALLATION NOT AFFECTED BY REMODEL. COORDINATE WITH OWNER AND G.C.
G. SERVICES TO ITEMS NOT REMOVED AS PART OF THIS WORK SHALL BE RESTORED UPON COMPLETION OF THIS WORK TO FULLY OPERATIONAL CONDITION.
H. NOT ALL ITEMS REQUIRED TO BE DEMOLISHED MAY BE INDICATED ON DRAWINGS. ALL DEMOLITION OF AFFECTED SPACE SHALL BE PERFORMED AS IF INDICATED.
I. FIELD VERIFY EXACT LOCATION OF ALL EXISTING MECHANICAL INSTALLATION INDICATED ON DRAWINGS.
J. ALL ITEMS TO BE RE-USED OR RELOCATED SHALL BE CLEANED, REPAIRED, AND RESTORED TO LIKE NEW CONDITION PRIOR TO RE-USE.

JonesGillamRenz
730 N. Ninth
Salina, KS 67401
785.827.0386
1881 Main Street, Suite 301
Kansas City, MO 64108
jgr@jgrarchitects.com

THE RESIDENCE AT CARTER LAKE

NEW SENIOR LIVING FACILITY

CARTER LAKE, IOWA

LICENSED PROFESSIONAL ENGINEER
TIMOTHY C. TREDWAY
21578
IOWA
08/01/2025

REVISIONS:

DATE: 8-1-2025
JOB: 25-3489
SHEET NO.:

M0.1

COPYRIGHTED ©

LST Consulting Engineers, PA
MANHATTAN
4809 Vue Du Lac Place, Suite 201
Manhattan, KS 66503
785.587.8042
WICHITA
125 S. Washington, Suite 150
Wichita, KS 67202
316.285.0696
www.LSTengineers.com
mail@LSTengineers.com

Project 25039 **8-1-2025**

NOTES BY SYMBOL

1. ROUTE 6"Ø EXHAUST DUCT TO MANUFACTURER'S WALL CAP WITH BACKDRAFT DAMPER AND BIRD SCREEN. COORDINATE FINAL LOCATION WITH ARCHITECT.
2. 4" DRYER DUCT. SEE ENLARGED PLANS FOR MORE INFORMATION. COORDINATE FINAL LOCATION OF WALL CAP WITH ARCHITECT.
3. PROVIDE UL LISTED DRYER BOX EQUAL TO IN-O-VATE TECHNOLOGIES IN WALL INSTALLED IN ACCORDANCE WITH MANUFACTURER'S RECOMMENDATIONS, AND ROUTE 4"Ø DRYER EXHAUST DUCT TO WALL CAP WITH BACKDRAFT DAMPER. SEE OVERALL MECHANICAL PLANS FOR UNIT SPECIFIC ROUTING. MAXIMUM ALLOWABLE EQUIVALENT DUCT LENGTH = 35'. UTILIZE LONG RADIUS SMOOTH ELBOWS WHERE REQUIRED. MAXIMUM EQUIVALENT DUCT LENGTH MAY BE INCREASED WHERE DRYER MANUFACTURER'S INSTALLATION INSTRUCTIONS ALLOW, AND DOCUMENTATION IS PROVIDED TO CODE OFFICIAL PRIOR TO CONCEALMENT INSPECTION. COORDINATE EXACT REQUIREMENTS WITH EQUIPMENT PROVIDED. PROVIDE PERMANENT LABEL IDENTIFYING EQUIVALENT LENGTH OF DRYER DUCT INSTALLED PER IMC 504.

   NOTE: ANNULAR SPACE AROUND DUCT IS TO BE SEALED AT ALL PENETRATIONS OF FLOORS AND CEILINGS WITH U.L. LISTED FIRE STOPPING SYSTEM.
4. CONNECT O.A. DUCT TO RISER AS HIGH AS POSSIBLE AND ROUTE TO RETURN AIR DUCT WORK AND BALANCE AS FOLLOWS:
   1ST FLOOR 'BC-1C': 200 CFM
   1ST FLOOR 'BC-1B': 105 CFM
   2ND FLOOR 'BC-1A': 110 CFM
   3RD FLOOR 'BC-1B': 135 CFM
5. ROUTE O.A. DUCT DOWN THROUGH RATED SHAFT. PROVIDE FIRE DAMPER AT EACH LEVEL WHERE O.A. BRANCH DUCT PENETRATES SHAFT WALL.

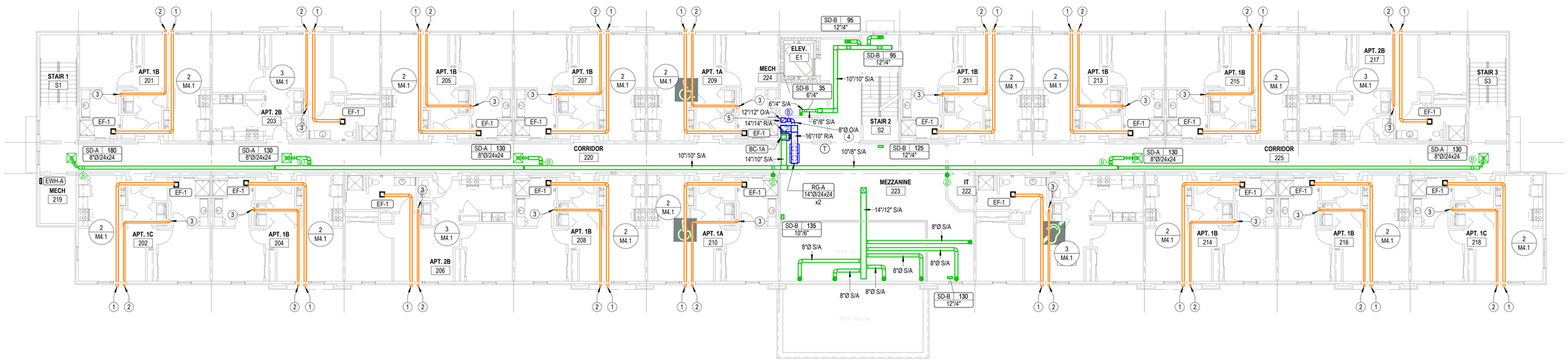

2 SECOND FLOOR-HVAC PLAN

3/32" = 1'-0"

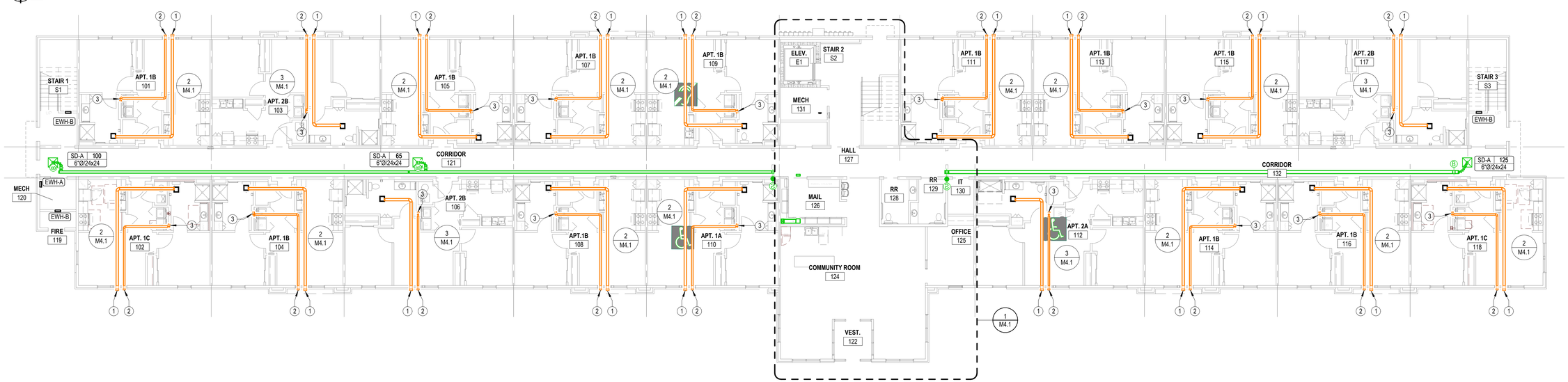

1 FIRST FLOOR HVAC PLAN

3/32" = 1'-0"

JonesGillamRenz
730 N. Ninth
Salina, KS 67401
785.827.0386
1881 Main Street, Suite 301
Kansas City, MO 64108
jgr@jgrarchitects.com

THE RESIDENCE AT CARTER LAKE

NEW SENIOR LIVING FACILITY

CARTER LAKE, IOWA

LICENSED PROFESSIONAL ENGINEER
TIMOTHY C. TREMWAY
21978
IOWA
09/03/2025

REVISIONS:

1 09-03-2025 ADDENDUM #1

DATE: 8-1-2025
JOB: 25-3489
SHEET NO.:

M1.1

COPYRIGHTED ©

LST Consulting Engineers, PA
MANHATTAN
4809 Vue Du Lac Place, Suite 201
Manhattan, KS 66503
785.587.8042
WICHITA
125 S. Washington, Suite 150
Wichita, KS 67202
316.285.0696
www.LSTengineers.com
mail@LSTengineers.com

Project 25039 **8-1-2025**

NOTES BY SYMBOL

1. ROUTE 6"Ø EXHAUST DUCT TO MANUFACTURER'S WALL CAP WITH BACKDRAFT DAMPER AND BIRD SCREEN, COORDINATE FINAL LOCATION WITH ARCHITECT.
2. 4" DRYER DUCT. SEE ENLARGED PLANS FOR MORE INFORMATION. COORDINATE FINAL LOCATION OF WALL CAP WITH ARCHITECT.
3. PROVIDE UL LISTED DRYER BOX EQUAL TO IN-O-VATE TECHNOLOGIES IN WALL INSTALLED IN ACCORDANCE WITH MANUFACTURER'S RECOMMENDATIONS, AND ROUTE 4"Ø DRYER EXHAUST DUCT TO WALL CAP WITH BACKDRAFT DAMPER. SEE OVERALL MECHANICAL PLANS FOR UNIT SPECIFIC ROUTING. MAXIMUM ALLOWABLE EQUIVALENT DUCT LENGTH = 35'. UTILIZE LONG RADIUS SMOOTH ELBOWS WHERE REQUIRED. MAXIMUM EQUIVALENT DUCT LENGTH MAY BE INCREASED WHERE DRYER MANUFACTURER'S INSTALLATION INSTRUCTIONS ALLOW, AND DOCUMENTATION IS PROVIDED TO CODE OFFICIAL PRIOR TO CONCEALMENT INSPECTION. COORDINATE EXACT REQUIREMENTS WITH EQUIPMENT PROVIDED. PROVIDE PERMANENT LABEL IDENTIFYING EQUIVALENT LENGTH OF DRYER DUCT INSTALLED PER IMC 504.

   NOTE: ANNULAR SPACE AROUND DUCT IS TO BE SEALED AT ALL PENETRATIONS OF FLOORS AND CEILINGS WITH UL LISTED FIRE STOPPING SYSTEM.
4. ROUTE O.A. DUCT DOWN THROUGH RATED SHAFT. PROVIDE FIRE DAMPER AT EACH LEVEL WHERE O.A. BRANCH DUCT PENETRATES SHAFT WALL.
5. ROUTE 20"Ø DUCT THROUGH ATTIC FROM GRAVITY VENTILATOR.
6. CONNECT O.A. DUCT TO RISER AS HIGH AS POSSIBLE AND ROUTE TO RETURN AIR DUCT WORK AND BALANCE AS FOLLOWS:
   1ST FLOOR 'BC-1C': 200 CFM
   1ST FLOOR 'BC-1B': 105 CFM
   2ND FLOOR 'BC-1A': 110 CFM
   3RD FLOOR 'BC-1B': 125 CFM
7. ROUTE 8" DIA. O.A. DUCT UP THROUGH ROOF AND TERMINATE WITH ELBOW DOWN COVERED WITH WELDED WIRE FABRIC. BALANCE O.A. TO 190 CFM.
8. INSTALL RETURN GRILLE AS HIGH AS POSSIBLE.

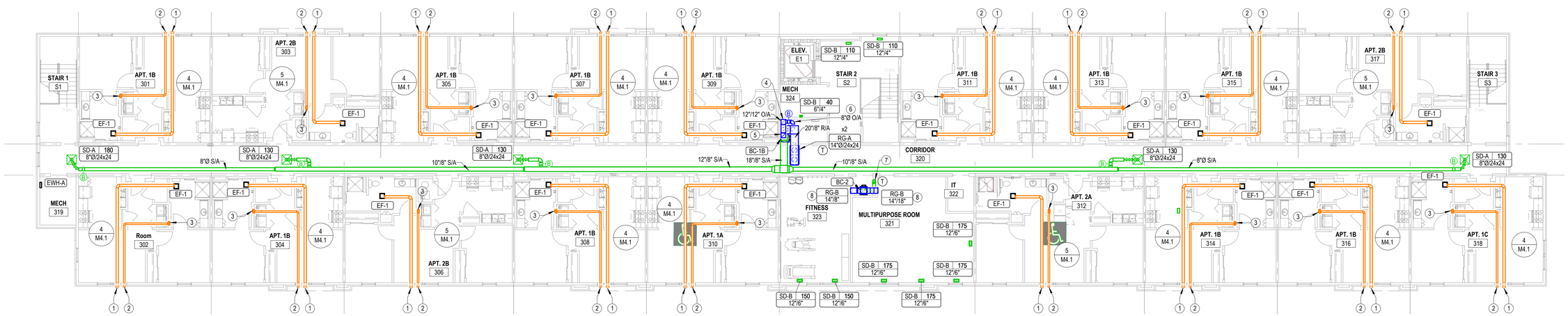

THIRD FLOOR-HVAC PLAN

3/32" = 1'-0"

JonesGillamRenz
730 N. Ninth
Salina, KS 67401
785.827.0386
1881 Main Street, Suite 301
Kansas City, MO 64108
jgr@jgrarchitects.com

THE RESIDENCE AT CARTER LAKE

NEW SENIOR LIVING FACILITY

CARTER LAKE, IOWA

LICENSED PROFESSIONAL ENGINEER
TIMOTHY C. TREDWAY
21578
IOWA
09/03/2025

REVISIONS:
1 09-03-2025 ADDENDUM #1

DATE: 8-1-2025
JOB: 25-3489
SHEET NO.:

M1.2

COPYRIGHTED ©

LST Consulting Engineers, PA
MANHATTAN
4809 Vue Du Lac Place, Suite 201
Manhattan, KS 66503
785.587.8042
WICHITA
125 S. Washington, Suite 150
Wichita, KS 67202
316.285.0696
www.LSTengineers.com
mail@LSTengineers.com

Project 25039 **8-1-2025**

NOTES BY SYMBOL

1. ROUTE REFRIGERANT PIPING FROM HEAT PUMP TO BLOWER COIL. PENETRATE WALL 18" AFG AND ROUTE PIPING CONCEALED IN WALLS AND ABOVE CEILINGS. UTILIZE PIPE PENETRATION ASSEMBLY EQUAL TO AIREX TITAN OUTLET.
2. SEE M1.1, AND M1.2 FOR DRYER EXHASUT DUCT ROUTING.
3. SEE M1.1, AND M1.2 FOR BATHROOM EXHAUST DUCT ROUTING.
4. RECIRCULATING RANGE HOOD BY OTHERS.
5. MOUNT TRANSFER GRILLE IN BEDROOM 6" BELOW CEILING AND MOUNT TRANSFER GRILLE ON OPPOSITE SIDE OF WALL 6" ABOVE FINISHED FLOOR. LINE STUD CAVITY WITH SHEET METAL DUCTWORK.
6. MOUNT TRANSFER GRILLES IN BEDROOM 6" BELOW CEILING CENTERED ABOVE DOOR ON BOTH SIDES OF WALL CONNECT GRILLES WITH SHEET METAL DUCTWORK.
7. PROVIDE AUXILIARY DRAIN PAN BELOW BLOWER COIL, AND PIPE OVERFLOW DRAIN TO FLOOR DRAIN.
8. PROVIDE BLOWER COIL WITH CONDENSATE OVERFLOW SHUTDOWN SWITCH.
9. BLOWER COIL TO BE DOWNFLOW TYPE. DUCT TO BE ROUTED BELOW FLOOR, SEE HVAC RISERS FOR MORE INFORMATION.
10. CONNECT O.A. DUCT TO RISER AS HIGH AS POSSIBLE AND ROUTE TO RETURN AIR DUCT WORK AND BALANCE AS FOLLOWS:
    1ST FLOOR 'BC-1C': 200 CFM
    1ST FLOOR 'BC-1B': 105 CFM
    2ND FLOOR 'BC-1A': 110 CFM
    3RD FLOOR 'BC-1B': 125 CFM
11. ROUTE 6" DIA. O.A. DUCT UP THROUGH ROOF AND TERMINATE WITH ELBOW DOWN COVERED WITH WELDED WIRE FABRIC. BALANCE O.A. TO 55 CFM.
12. INSTALL RETURN GRILLE AS HIGH AS POSSIBLE.
13. ROUTED DUCTWORK CONCEALED IN CHASE. COORDINATE WITH ARCHITECT.
14. ROUTE 4"Ø EXHAUST DUCT TO MANUFACTURER'S WALL CAP WITH BACKDRAFT DAMPER AND BIRD SCREEN, COORDINATE FINAL LOCATION WITH ARCHITECT.

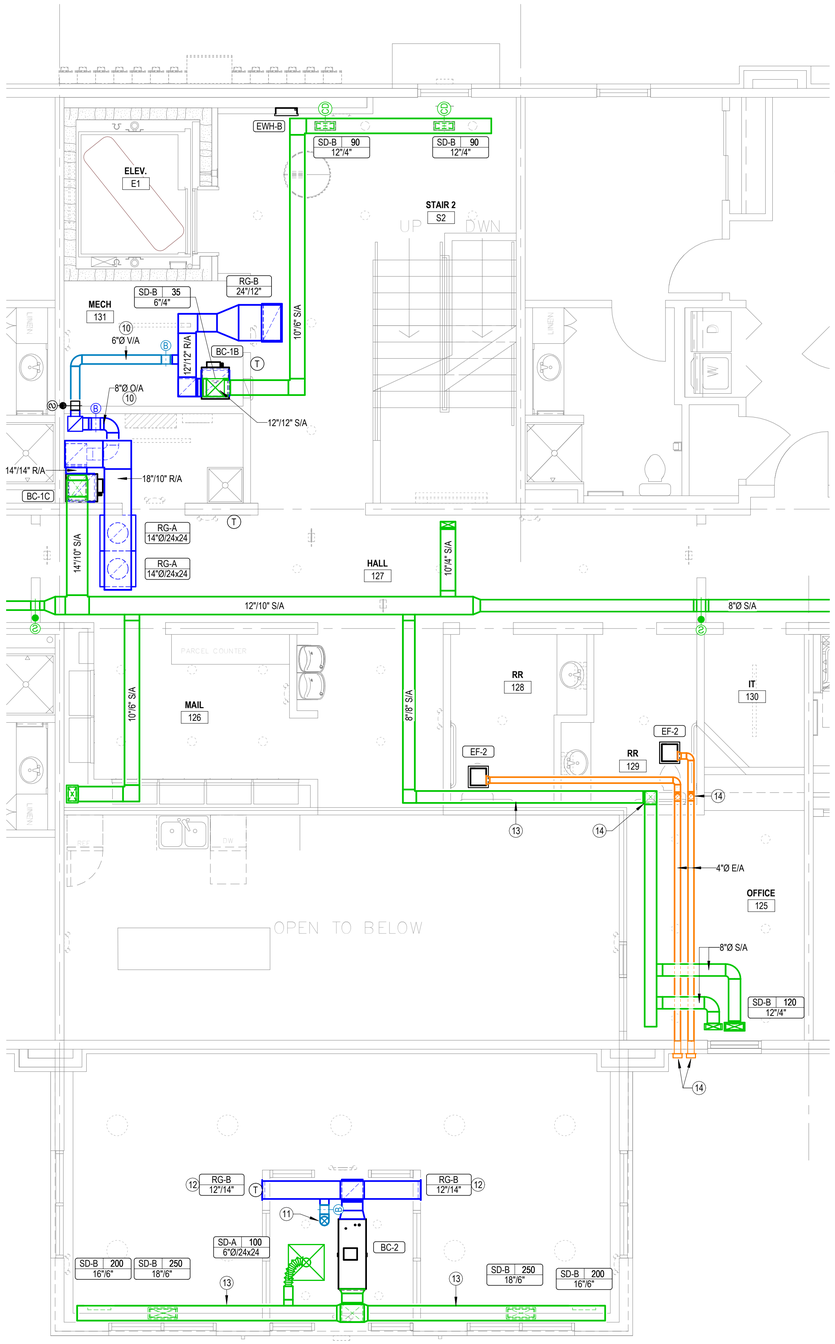

1 **ENLARGED HVAC PLAN-COMMONS**
1/4" = 1'-0"

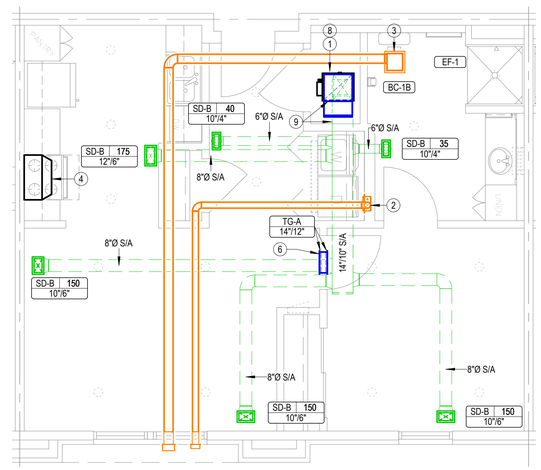

4 **ENLARGED HVAC PLAN-3RD FLOOR-1 BR**
1/4" = 1'-0"

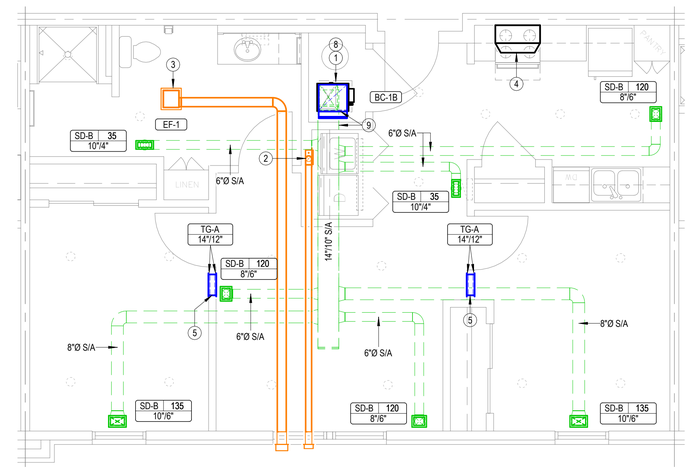

5 **ENLARGED HVAC PLAN-3RD FLOOR-2 BR**
1/4" = 1'-0"

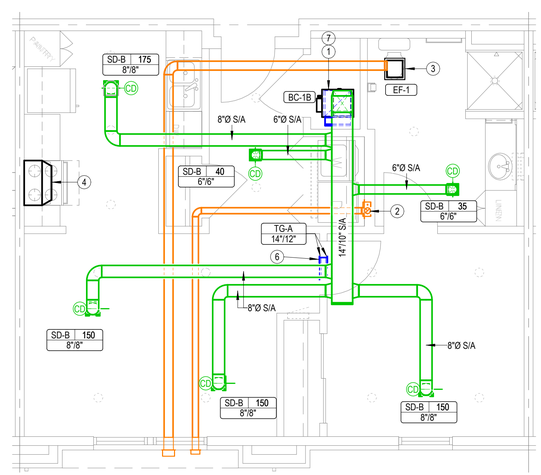

2 **ENLARGED HVAC PLAN-1ST AND 2ND FLOOR-1 BR**
1/4" = 1'-0"

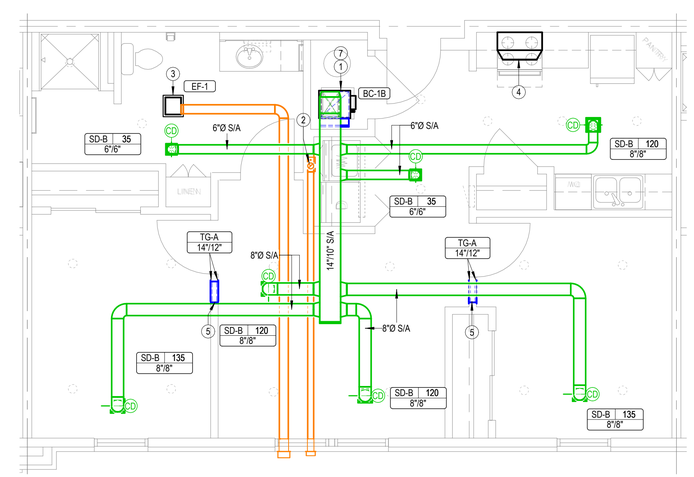

3 **ENLARGED HVAC PLAN-1ST AND 2ND FLOOR-2 BR**
1/4" = 1'-0"

JonesGillamRenz
730 N. Ninth
Salina, KS 67401
785.827.0386
1881 Main Street, Suite 301
Kansas City, MO 64108
jgr@jgrarchitects.com

THE RESIDENCE AT CARTER LAKE
NEW SENIOR LIVING FACILITY
CARTER LAKE, IOWA

LICENSED PROFESSIONAL ENGINEER
TIMOTHY C. TRIDWAY
21578
IOWA
08/01/2025

REVISIONS:

DATE: 8-1-2025
JOB: 25-3489
SHEET NO.:

M4.1

COPYRIGHTED ©

HEAT PUMP SCHEDULE

NOTES:

1. Refrigerant lines shall be field fabricated. Coordinate line sizing requirements with equipment manufacturer for length.

MARK	MANUFACTURER	MODEL	NOMINAL CAPACITY	COOLING						HEATING				ELECTRICAL			
				EDB	EDB	EWB	NET SENSIBLE	NET TOTAL	SEER2	OA EDB	EDB	NET TOTAL	HSPF2	PHASE	MCA	MOCP	VOLTAGE
HP-1	TRANE	5TWR7024	2.0 ton	95 °F	78 °F	63 °F	18,900 Btu/h	21,500 Btu/h	17.1	47 °F	70 °F	22,300 Btu/h	9	1	18.0 A	20.0 A	208 V
HP-2	TRANE	5TWR7036	3.0 ton	95 °F	78 °F	63 °F	24,400 Btu/h	29,700 Btu/h	17.1	47 °F	70 °F	33,400 Btu/h	9	1	29.0 A	30.0 A	208 V

BLOWER COIL SCHEDULE

NOTES:

1. Single point connection required, coordinate the exact electrical requirements of equipment provided with E.C.
2. Electric heater shall not operate simultaneously with heat pump. Electric heater shall be used as back-up heat only.
3. Provide 7-day programmable thermostat compatible with requirements of 2015 IECC.
4. Provide 2 sets of MERV-8 filters.

MARK	MANUFACTURER	MODEL	FAN		ELECTRIC HEAT	ELECTRICAL			
			AIRFLOW	ESP	CIRCUIT	VOLTAGE	PHASE	MCA	MOCP
BC-1A	TRANE	5TEM6B02	700 CFM	0.70 in-wg	3.6 kW	208 V	1	25.0 A	25.0 A
BC-1B	TRANE	5TEM6B02	700 CFM	0.70 in-wg	5.8 kW	208 V	1	38.0 A	40.0 A
BC-1C	TRANE	5TEM6B02	800 CFM	0.70 in-wg	7.2 kW	208 V	1	47.0 A	50.0 A
BC-2	TRANE	5TEM6D03	1,000 CFM	0.70 in-wg	7.2 kW	208 V	1	52.0 A	60.0 A

Electric Cabinet Heater Schedule

Mark	Manufacturer	Model	Mounting	Watts	Voltage	Phase	Description	Notes
EWH-A	Trane	UHWA	Wall	1.5 kW	120 V	1	Architectural fan forced wall heater	1,2,4
EWH-B	Trane	UHWA	Wall	3.0 kW	208 V	1	Architectural fan forced wall heater	1,2,3

NOTES:

1. Provide with high temperature thermal cutout and fan delay.
2. Provide with integral thermostat and unit mounted disconnect switch.
3. Provide with manufacturer's recessed mounting adapter sleeve. Coordinate exact mounting requirement and locations with Architect and rated construction.
4. Provide with manufacturer's surface mounting adapter sleeve. Coordinate exact mounting requirements and locations with Architect and rated construction.

Exhaust Fan Schedule

Mark	Manufacturer	Model	CFM	ESP	Power	Electrical		Notes
						Voltage	Phase	
EF-1	Panasonic	FV-0511VQ1	80 CFM	0.25 in-wg	32 W	120 V	1	1,2,3,4,5,6
EF-2	Panasonic	FV-0511VQ1	50 CFM	0.25 in-wg	32 W	120 V	1	1,2,3,4,5,6

NOTES:

1. Fixture shall be Energy Star listed.
2. Fixture shall operate at < 1 SONE.
3. Provide with EC motor with integral disconnect.
4. Provide manufacturer's wall cap or roof jack, see plans.
5. Provide integral backdraft damper.
6. Provide with manufacturer's ceiling radiation damper. Omit radiation dampers where rated ceilings are not present, coordinate with Architect.

Grilles, Registers & Diffusers Schedule

ID Type	Manufacturer	Model	Application				Mounting	Include Damper	Product Specification
			Supply	Return	Exhaust	Transfer			
RG-A	Titus	PAR		■			Lay-In Full Face	No	24x24 perforated face return grille with neck size as indicated on drawings.
RG-B	Titus	301R		■			Surface Mount	No	Steel louvered return grille
SD-A	Titus	TMS	■				Lay-In Full Face	No	24x24 steel square louvered diffuser neck size as indicated on drawings
SD-B	Titus	300R	■				Surface Mount	Yes	Steel double deflection supply grille with front blades parallel to long dimension
TG-A	Titus	355RL				■	Surface Mount	No	Steel louvered return grille

NOTES:

- Maximum noise criteria shall be 25.
- Runouts to diffusers shall be same size as neck, U.N.O.
- Paint objects visible through grilles with flat black paint.
- Provide mounting frame as required for ceiling type. Coordinate with Architect.
- Verify finish with Architect.
- Provide devices with radiation dampers as required in rated ceilings. Coordinate with Architect.

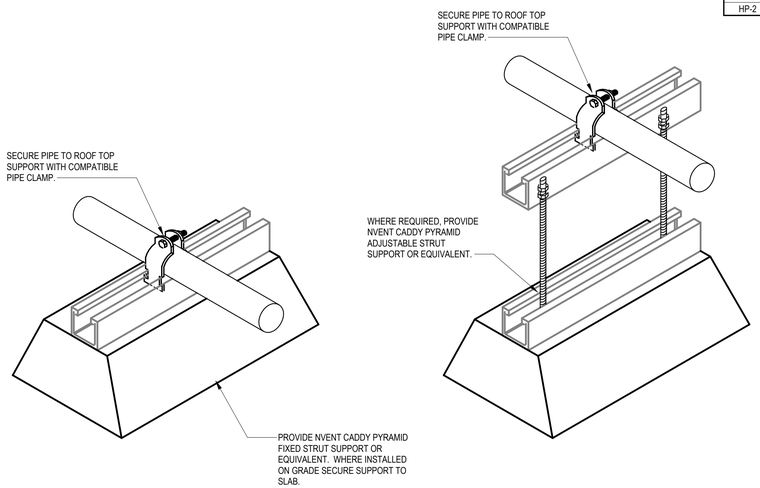

7 EXTERIOR PIPING SUPPORT DETAIL
NO SCALE

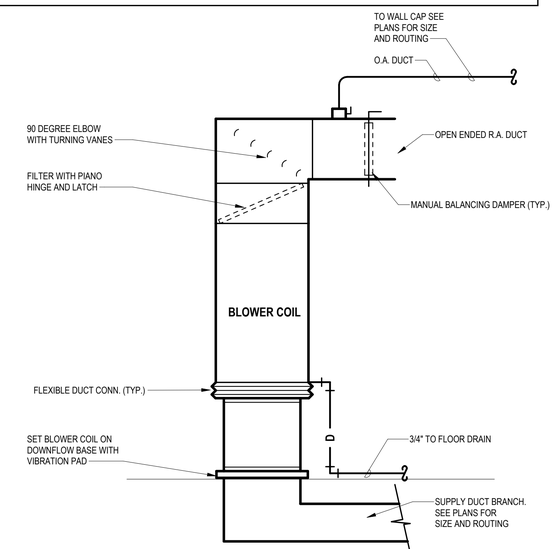

5 DOWNFLOW BLOWER COIL DETAIL - MULTIPURPOSE ROOM
NO SCALE

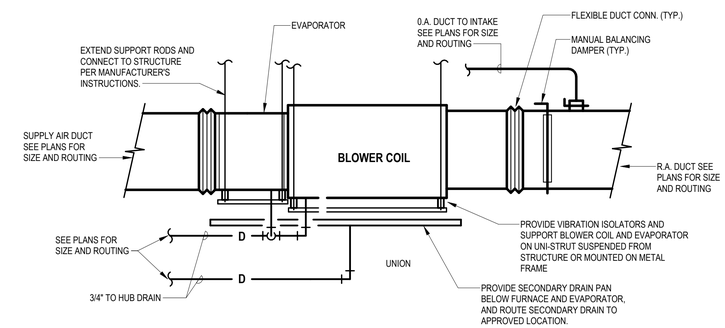

4 HORIZONTAL BLOWER COIL DETAIL
12" = 1'-0"

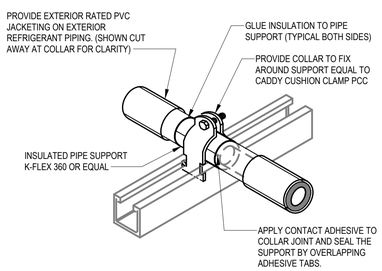

6 EXTERIOR REFRIGRANT PIPING INSULATION DETAIL
NO SCALE

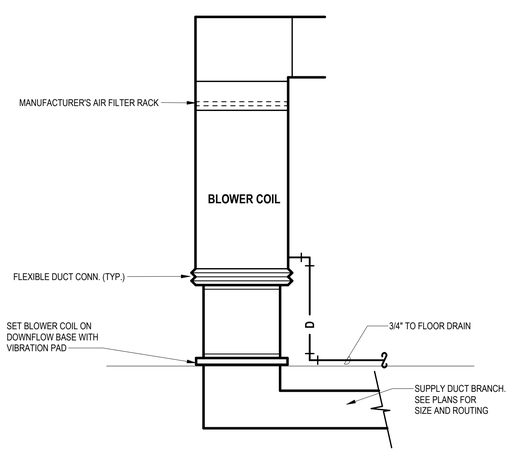

3 APARTMENT DOWNFLOW BLOWER COIL DETAIL
NO SCALE

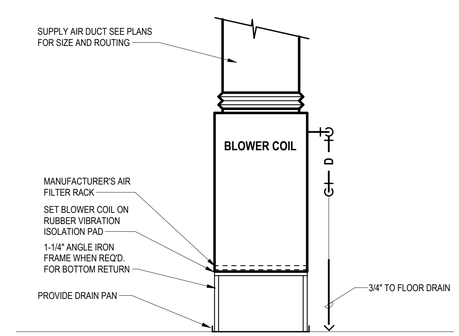

2 APARTMENT UPFLOW BLOWER COIL DETAIL
NO SCALE

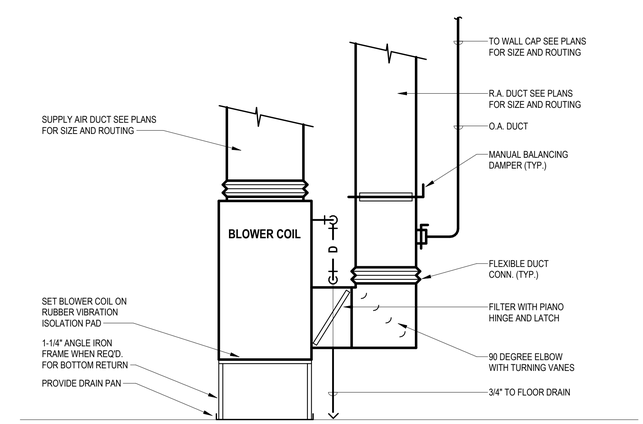

1 BLOWER COIL DETAIL
NO SCALE

LST Consulting Engineers, PA
MANHATTAN
4809 Vue Du Lac Place, Suite 201
Manhattan, KS 66503
785.587.8042
WICHITA
125 S. Washington, Suite 150
Wichita, KS 67202
316.285.0696
www.LSTengineers.com
mail@LSTengineers.com

Project 25039 8-1-2025

JonesGillamRenz
730 N. Ninth
Salina, KS 67401
785.827.0386
1881 Main Street, Suite 301
Kansas City, MO 64108
jgr@jgrarchitects.com

THE RESIDENCE AT CARTER LAKE
NEW SENIOR LIVING FACILITY
CARTER LAKE, IOWA

LICENSED PROFESSIONAL ENGINEER TIMOTHY C. TREDWAY 21578 IOWA
08/01/2025

REVISIONS:

DATE: 8-1-2025
JOB: 25-3489
SHEET NO.:

M6.1

COPYRIGHTED ©

LST Consulting Engineers, PA
MANHATTAN
4809 Vue Du Lac Place, Suite 201
Manhattan, KS 66503
785.587.8042
WICHITA
125 S. Washington, Suite 150
Wichita, KS 67202
316.285.0696
www.LSTengineers.com
mail@LSTengineers.com

Project 25039

8-1-2025

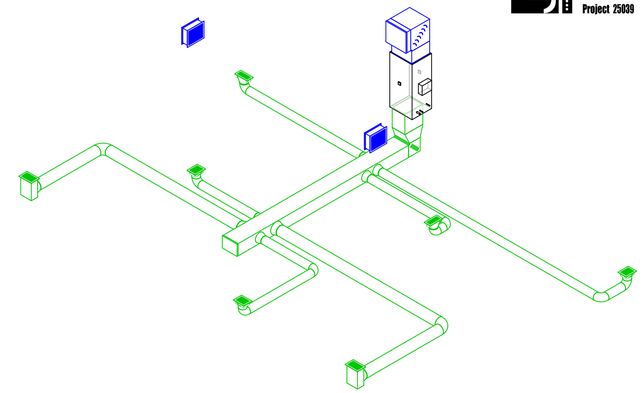

4 UNIT TYPE 2 - 3RD FLOOR - DUCT RISER

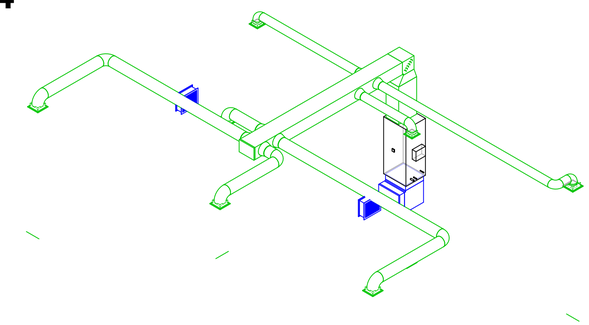

3 UNIT TYPE 2 - 1ST/2ND FLOOR - DUCT RISER

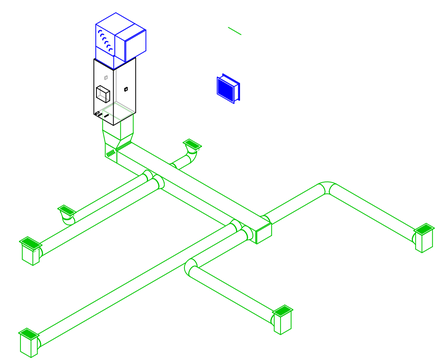

2 UNIT TYPE 1 - 3RD FLOOR - DUCT RISER

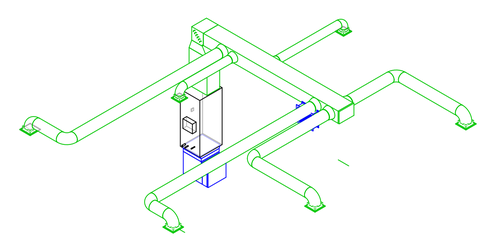

1 UNIT TYPE 1 - 1ST/2ND FLOOR - DUCT RISER

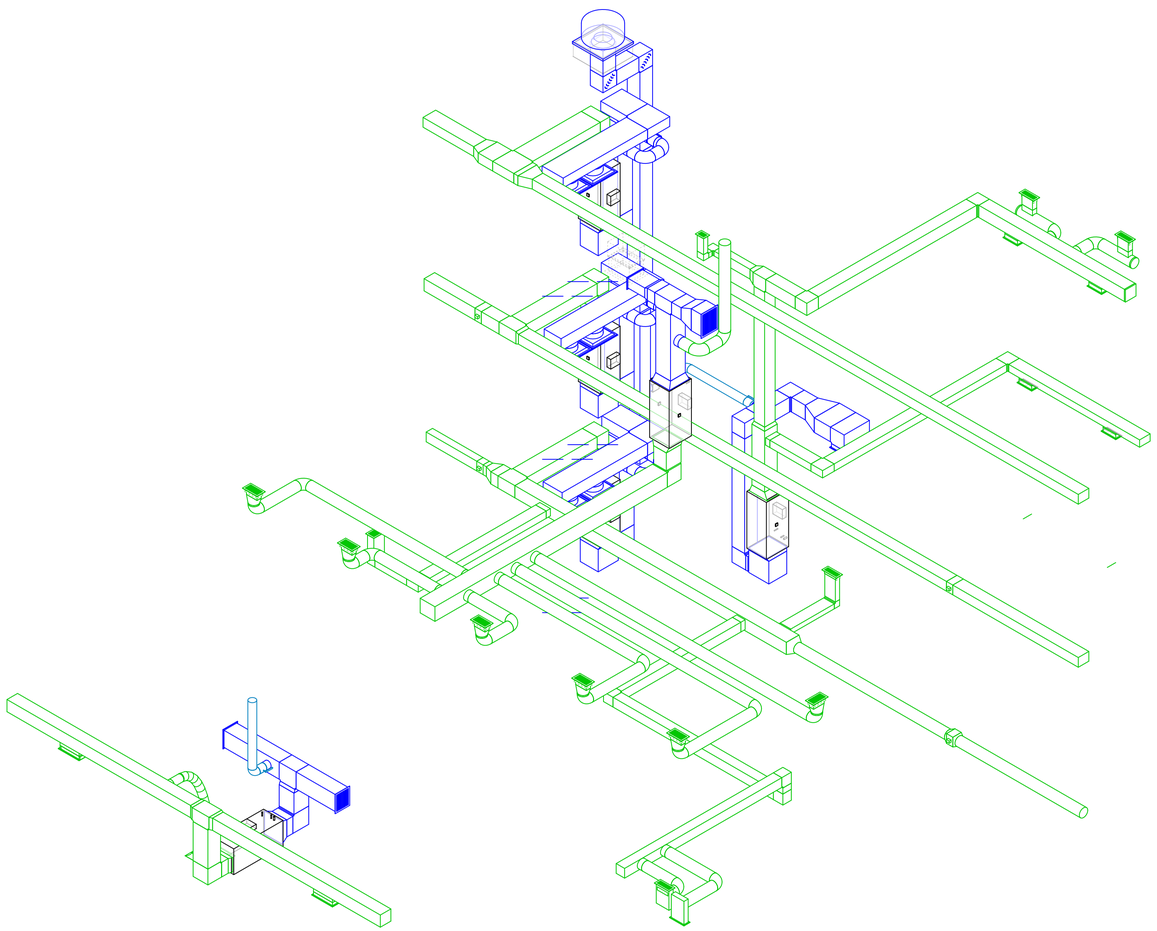

5 COMMON AREA - DUCT RISER

JonesGillamRenz
730 N. Ninth
Salina, KS 67401
785.827.0386
1881 Main Street, Suite 301
Kansas City, MO 64108
jgr@jgrarchitects.com

THE RESIDENCE AT CARTER LAKE

NEW SENIOR LIVING FACILITY

CARTER LAKE, IOWA

LICENSED PROFESSIONAL ENGINEER
TIMOTHY C. TREDWAY
21578
IOWA
08/01/2025

REVISIONS:

DATE: 8-1-2025
JOB: 25-3489
SHEET NO.:

M9.1

COPYRIGHTED ©

LST Consulting Engineers, PA
MANHATTAN
4809 Vue Du Lac Place, Suite 201
Manhattan, KS 66503
785.587.8042
WICHITA
125 S. Washington, Suite 150
Wichita, KS 67202
316.285.0696
www.LSTengineers.com
mail@LSTengineers.com

Project 25039 **8-1-2025**

General Plan Symbols

- Plan Revision Number
- Detail Number on Sheet
- Sheet Number Where Detail is Placed
- Keynote Symbol
- Continuation Symbol
- Point Where New Connects To Existing
- Room / 1 — Room Name / Number
- Area Being Demolished
- Area Not In Contract
- Electrical Equipment. Do not route HVAC installation above or below equipment. Maintain working clearance as indicated by dashed line.

Abbreviations

Ø	ROUND	LVR	LOUVER
ABV	ABOVE	LWT	LEAVING WATER TEMPERATURE
AC	AIR CONDITIONING	M/A	MIXED AIR
AD	AREA DRAIN	MAX	MAXIMUM
ADD	ADDENDUM	MBH	ONE THOUSAND BTU PER HOUR
AFF	ABOVE FINISHED FLOOR	MCF	ONE THOUSAND CUBIC FEET
AFUE	ANNUAL FUEL UTILIZATION EFFICIENCY	MD	MOTORIZED DAMPER
ALT	ALTERNATE	MECH	MECHANICAL
AP	ACCESS PANEL	MFR	MANUFACTURER
ARCH	ARCHITECT/ARCHITECTURAL	MIN	MINIMUM
BFF	BELOW FINISHED FLOOR	MISC	MISCELLANEOUS
BLW	BELOW	MTR	MOTOR
BTU	BRITISH THERMAL UNITS	MU/A	MAKE-UP/AIR
BTUH	BRITISH THERMAL UNITS PER HOUR	NC	NOISE CRITERIA
CAP	CAPACITY	NC	NORMALLY CLOSED
CB	CATCH BASIN	NIC	NOT IN CONTRACT
CFM	CUBIC FEET PER MINUTE	NO	NUMBER
CLG	CEILING	NO	NORMALLY OPEN
CO	CLEAN OUT	NTS	NOT TO SCALE
CW	COLD WATER	O	OXYGEN
D	DEGREE	O/A	OUTSIDE AIR
DB	DRY BULB	ORD	OVERFLOW ROOF DRAIN
DIA	DIAMETER	PD	PRESSURE DROP
DN	DOWN	PIV	POST INDICATOR VALVE
DW	DISTILLED WATER	PLBG	PLUMBING
EA	EACH	PRESS	PRESSURE
EAT	ENTERING AIR TEMPERATURE	PRV	PRESSURE REDUCING VALVE
ELEC	ELECTRICAL	PSI	POUNDS PER SQUARE INCH
EQUIP	EQUIPMENT	PSIG	POUNDS PER SQUARE INCH GAUGE
EWC	ELECTRIC WATER COOLER	PWR	POWER
EWT	ENTERING WATER TEMPERATURE	R	DUCT RISER
E/A	EXHAUST AIR	R/A	RETURN AIR
EXIST	EXISTING	RCP	RADIANT CEILING PANEL
F	DEGREES FAHRENHEIT	RD	ROOF DRAIN
FCO	FLOOR CLEAN OUT	REC	RECESSED
FD	FLOOR DRAIN	RED	REDUCER
FDC	FIRE DEPARTMENT CONNECTION	RH	RELATIVE HUMIDITY
FL	FLOOR	RL/A	RELIEF AIR
FO	FUEL OIL	RM	ROOM
FOV	FUEL OIL VENT	RPM	REVOLUTIONS PER MINUTE
FOR	FUEL OIL RETURN	RW	RAIN WATER
FOS	FUEL OIL SUPPLY	SF	SQUARE FOOT
FPM	FEET PER MINUTE	S/A	SUPPLY AIR
FS	FLOOR SINK	SAN	SANITARY
FT	FOOT/FEET	SF	SQUARE FOOT
FTR	FIN TUBE RADIATION	SD	SMOKE DAMPER
GAL	GALLON	SM	SURFACE MOUNT
GF	GAS-FIRED	SP	STANDPIPE
GC	GENERAL CONTRACTOR	SP	STATIC PRESSURE
GPM	GALLONS PER MINUTE	STM	STEAM
GW	GREASE WASTE	T	THERMOSTAT
HB	HOSE BIB	TD	TEMPERATURE DROP
HP	HORSE POWER	TDR	TRENCH DRAIN
HTG	HEATING	TEMP	TEMPERATURE
HTR	HEATER	TYP	TYPICAL
HW	HOT WATER	U/G	UNDERGROUND
HYD	HYDRANT	VAC	VACUUM
ID	INDIRECT	V	VENT
IN	INCH	VAV	VARIABLE AIR VOLUME
INV	INVERT	VENT	VENTILATION
LB	POUND	VTR	VENT THROUGH ROOF
LB/HR	POUNDS PER HOUR	W	WASTE
LAT	LEAVING AIR TEMPERATURE	WB	WET BULB
LP	LOW PRESSURE	WCO	WALL CLEAN OUT
LPG	LIQUEFIED PETROLEUM GAS	WH	WALL HYDRANT

Equipment Abbreviations

AC	AIR CONDITIONING UNIT	ET	EXPANSION TANK
ACCU	AIR COOLING CONDENSING UNIT	EWH	ELECTRIC WATER HEATER
AHU	AIR HANDLING UNIT	FCU	FAN COIL UNIT
AS	AIR SEPARATOR	FP	FIRE PUMP
B	BOILER	GI	GREASE INTERCEPTOR
CH	CHILLER	GRV	GRAVITY ROOF VENTILATOR
CT	COOLING TOWER	HWP	HEATING WATER PUMP
CUH	CABINET UNIT HEATER	HRU	HEAT RECOVERY UNIT
CHWP	CHILLED WATER PUMP	PRV	POWER ROOF VENTILATOR
DBP	DOMESTIC WATER BOOSTER PUMP	RE	RETURN/EXHAUST FAN
DC	DUCT MOUNTED COIL	RTU	ROOFTOP UNIT
DCP	DOMESTIC WATER CIRCULATING PUMP	SP	SUMP PUMP
EF	EXHAUST FAN	UH	UNIT HEATER
EDC	ELECTRIC DUCT COIL	WH	WATER HEATER

* NOTE *
ALL OF GENERAL NOTES ON THIS SHEET ARE TO BE APPLIED TO ALL OTHER DRAWINGS IN THIS SET.THE SYMBOLS AND ABBREVIATIONS SHOWN ON THIS SHEET MAY OR MAY NOT BE USED IN THIS SET OF DRAWINGS.

Plumbing Symbols

- 2" — Nominal Pipe Size
- Above Ground Piping
- Below Ground Piping
- 1/8" / 12" SLOPE — Pipe Slope (When Applicable)
- (E) — Existing Pipe To Remain
- Pipe To Be Demolished
- CW — Domestic Cold-Water
- NPW — Non-Potable Water
- S-CW — Soft Cold-Water
- F-CW — Filtered Cold-Water
- RO — Reverse Osmosis Water
- HW — Domestic Hot-Water
- HW 140° — Domestic Hot-Water 140°
- HW-R — Hot-Water Recirculation
- HW-R 140° — Hot-Water Recirculation 140°
- SS — Sanitary Drain
- V — Sanitary Vent
- RD — Radon Mitigation
- WV — Sanitary Wet Vent
- CWV — Combination DWV
- CD — Condensate Drain
- ID — Indirect Drain
- GW — Grease Waste
- GV — Grease Vent
- PD — Pump Discharge
- SD — Storm Drain
- OSD — Storm Overflow
- CA — Compressed Air
- G — Natural Gas
- LP — Liquid Propane
- Pipe Rise / Drop

Pipe Accessory Notes

- 4" FCO — Cleanout
- 2" CHECK — Check Valve
- 2" BALANCE — Balancing Valve
- 2" CIRC — Circuit Setter
- 2" GATE — Gate Valve
- 2" S/O — Ball Valve
- S — 2" STRAIN — Fluid Strainer
- 1" GAS-CNTRL — Emergency Gas Shutoff
- 1" PLUG — Plug Valve
- 1" GAS COCK — Gas Shutoff Cock
- 1" REG — Gas Regulator
- T/P — 1" T/V — Thermostatic Valve
- EM — TMV-XT/P — Mixing Valve
- TMVEM — Emergency Mixer
- W — 2" PRV — Pressure Reducing Valve
- 2" METER — Water Meter
- Double Check Valve
- Reduced Pressure Zone

Plumbing Fixture Notes

- Floor Drain — Design Size
- 2" FD-A — Identity Type
- 2 DFU — Drainage Fixture Units
- 2" FD — Floor Drain w/ Deep Seal Trap
- 2" FDP — Floor Drain w/ Trap Primer "P" Indicates Primer Connection
- 2" FD — Floor Drain w/ Integral Cleanout
- 6" AD-1 — Area Drain (No Trap)
- 6" DD-1 — Deck Drain
- 6" HD-1 — Hub Drain (Funnel Type)
- 3" FS — Floor Sink
- 4" SD-12 — Roof Drain
- 6" SD-1 — Combination Drain
- 2000 SF — Rainfall Surface Area

Plumbing Sheet Index

P0.1	PLUMBING TITLE SHEET
P1.1	WASTE AND VENT PLANS 0 AND 1ST
P1.2	WASTE AND VENT PLANS 2ND AND 3RD
P1.3	DOMESTIC WATER 1ST AND 2ND
P1.4	DOMESTIC WATER 3RD
P4.1	ENLARGED DOMESTIC WATER
P6.1	PLUMBING SCHEDULES
P9.1	PLUMBING RISER DIAGRAMS

GENERAL PLUMBING NOTES

A. FIELD VERIFY ALL NEW WATER, WASTE, AND VENT PIPING CONNECTIONS AND PROVIDE NEW CONNECTIONS AS REQUIRED FOR PROPERLY OPERATING SYSTEMS.
B. PITCH UNDERFLOOR SANITARY WASTE PIPING OVER 2" AT 1/8" PER FOOT, 2" AND SMALLER AT 1/4" PER FOOT.
C. FIELD VERIFY LOCATION AND INVERTS OF SITE UTILITIES PRIOR TO INSTALLATION.
D. ROUTE DOMESTIC WATER, AND SANITARY SEWER SERVICES TO SITE UTILITIES 5'-0" FROM BUILDING UNLESS NOTED OTHERWISE. REFER TO CIVIL PLANS.
E. WASTE AND VENT PIPING BELOW FLOOR AND THROUGH FLOOR SHALL BE 2" MINIMUM.
F. LOCATIONS OF PIPING AND EQUIPMENT AS INDICATED ON THE DRAWINGS ARE APPROXIMATE AND SUBJECT TO MINOR ADJUSTMENTS IN THE FIELD. WORK SHALL BE COORDINATED WITH ALL OTHER TRADES TO AVOID INTERFERENCE IN THE FIELD.
G. FINAL PRODUCT SHALL BE A COMPLETE AND FUNCTIONING SYSTEM, AND SHALL CONFORM TO ALL REQUIREMENTS OF APPLICABLE FEDERAL, STATE, AND LOCAL CODES, INCLUDING BUT NOT LIMITED TO THE INTERNATIONAL (OR UNIFORM, DEPENDING ON JURISDICTION) PLUMBING CODE AND INTERNATIONAL MECHANICAL CODE.
H. LOCATE EQUIPMENT REQUIRING ACCESS 2'-0" MAXIMUM ABOVE CEILING.
I. LOCATE PIPING AND EQUIPMENT OUTSIDE OF THE NEC REQUIRED CLEAR SPACE ABOVE AND AROUND ELECTRICAL PANELS, TRANSFORMERS AND OTHER ELECTRICAL EQUIPMENT. COORDINATE WITH ELECTRICAL CONTRACTOR.
J. PENETRATIONS OF RATED ASSEMBLIES SHALL BE FIRE STOPPED. FIRE STOPPING SHALL BE U.L. LISTED. SEE ARCHITECTURAL DRAWINGS FOR LOCATIONS OF RATED ASSEMBLIES.
K. PROVIDE SLEEVES AND/OR OPENINGS TO RUN PIPES THROUGH FOUNDATIONS, FLOORS, WALLS, AND ROOF.
L. MAINTAIN CLEAR ACCESS TO SERVICE EQUIPMENT AND OTHER ACCESSORIES REQUIRING SERVICE. VISUAL INSPECTION OR HAND OPERATION. WHERE INDICATED OR REQUIRED, PROVIDE ACCESS PANELS OF THE TYPE SELECTED TO SUIT MATERIALS IN WHICH INSTALLED.
M. TRANSITION FROM PIPING SIZES SHOWN TO PROPERLY CONNECT TO EQUIPMENT.
N. PIPE SIZES SHOWN SHALL BE CONTINUED IN THE DIRECTION OF FLOW UNTIL ANOTHER SIZE IS SHOWN.
O. INSTALL ALL EQUIPMENT IN ACCORDANCE WITH THE RESPECTIVE MANUFACTURER'S WRITTEN INSTALLATION INSTRUCTIONS, AT A LEVEL OF QUALITY AND WORKMANSHIP CONSISTENT WITH THE SPECIFICATIONS.
P. INSTALL EXPOSED PIPING AS HIGH AS PRACTICAL IN ROOMS WITHOUT CEILINGS.
Q. PRIOR TO STARTING WORK, SUBMIT SHOP DRAWINGS FOR ALL PLUMBING EQUIPMENT AND MATERIALS. SUBSTITUTE EQUIPMENT AND MATERIALS INSTALLED WITHOUT PRIOR APPROVAL SHALL BE SUBJECT TO REPLACEMENT AT CONTRACTOR'S EXPENSE.
R. CONTRACTOR SHALL OBTAIN AND PAY FOR ALL NECESSARY PERMITS AND SHALL ARRANGE FOR ALL INSPECTIONS AS REQUIRED.
S. PROVIDE ONE YEAR WARRANTY FOR ALL WORKMANSHIP AND MATERIALS AFTER THE DATE OF FINAL ACCEPTANCE.

GENERAL PLUMBING DEMOLITION NOTES

A. ALL PIPING TAKEN OUT OF SERVICE SHALL BE REMOVED. WHERE PIPING TO BE REMOVED IS CONNECTED TO EXISTING PIPING TO REMAIN, PIPING SHALL BE REMOVED BACK TO MAIN AND CAPPED, UNLESS INDICATED OTHERWISE. CONTRACTOR SHALL DISPOSE OF PIPING OR DELIVER TO OWNER, AS DIRECTED BY OWNER.
B. WHERE PIPING TAKEN OUT OF SERVICE IS LOCATED BELOW SLAB AND IS UNABLE TO BE REMOVED. CAP BELOW SLAB.
C. COORDINATE CUTTING, PATCHING OF EXISTING WALLS, CEILINGS, ROOF AND FLOORS AFFECTED BY MECHANICAL DEMOLITION WITH G.C.
D. ALL EQUIPMENT TAKEN OUT OF SERVICE SHALL BE REMOVED. EQUIPMENT SHALL BE DELIVERED TO OWNER OR DISPOSED OF AS DIRECTED BY OWNER.
E. REMOVE ALL PLUMBING INSTALLATION FROM PROJECT AREA, UNLESS REQUIRED FOR NEW WORK OR EXISTING INSTALLATION NOT AFFECTED BY REMODEL. COORDINATE WITH OWNER AND G.C.
F. SERVICES TO ITEMS NOT REMOVED AS PART OF THIS WORK SHALL BE RESTORED UPON COMPLETION OF THIS WORK TO FULLY OPERATIONAL CONDITION.
G. NOT ALL ITEMS REQUIRED TO BE DEMOLISHED MAY BE INDICATED ON DRAWINGS. ALL DEMOLITION OF AFFECTED SPACE SHALL BE PERFORMED AS IF INDICATED.
H. FIELD VERIFY EXACT LOCATION OF ALL EXISTING PLUMBING INSTALLATION INDICATED ON DRAWINGS.
I. ALL ITEMS TO BE RE-USED OR RELOCATED SHALL BE CLEANED, REPAIRED, AND RESTORED TO LIKE NEW CONDITION PRIOR TO RE-USE.

JonesGillamRenz
730 N. Ninth
Salina, KS 67401
785.827.0386
1881 Main Street, Suite 301
Kansas City, MO 64108
jgr@jgrarchitects.com

THE RESIDENCE AT CARTER LAKE

NEW SENIOR LIVING FACILITY

CARTER LAKE, IOWA

LICENSED PROFESSIONAL ENGINEER
TIMOTHY C. TREDWAY
21578
IOWA
08/01/2025

REVISIONS:

DATE: 8-1-2025
JOB: 25-3489
SHEET NO.:

P0.1

COPYRIGHTED ©

PLUMBING SIZING SYMBOLS	
(X")	DRAIN (X = SIZE)
X"	VENT (X = SIZE)
(X")	WASTE STACK VENT (X = SIZE)

LST Consulting Engineers, PA

MANHATTAN
4809 Vue Du Lac Place, Suite 201
Manhattan, KS 66503
785.587.8042

WICHITA
125 S. Washington, Suite 150
Wichita, KS 67202
316.285.0696

www.LSTengineers.com
mail@LSTengineers.com

Project 25039

8-1-2025

NOTES BY SYMBOL

1. ELEVATOR PIT SUMP PUMP, SEE DETAIL FOR MORE 3;P6.1 FOR MORE INFORMATION.
2. 4" PVC PIPE FOR RADON SYSTEM. COORDINATE EXACT REQUIREMENTS WITH ARCHITECT.
3. ROUTE 2" DISCHARGE FROM SUMP PUMP TO FLOOR SINK AS SHOWN ON PLANS. TERMINATE WITH CODE REQUIRED AIR GAP DIRECTLY ABOVE FLOOR SINK.
4. PROVIDE INDIRECT CONNECTION AT GARBAGE DISPOSER AND CONNECT DISHWASHER. ROUTE DRAIN FROM DISHWASHER AT BACK OF CABINETRY. COORDINATE EXACT ROUTING WITH G.C.
5. PROVIDE DRAIN BOX ABOVE CEILING EQUAL TO SIOUX CHIEF 696 FOR BLOWER COIL CONDENSATE DRAIN. PROVIDE TRAP SEAL DEVICE EQUAL TO PROSET TRAP GUARD.
6. 2" VTR, MAINTAIN MINIMUM 10'-0" CLEARANCE FROM OUTDOOR AIR INTAKE.

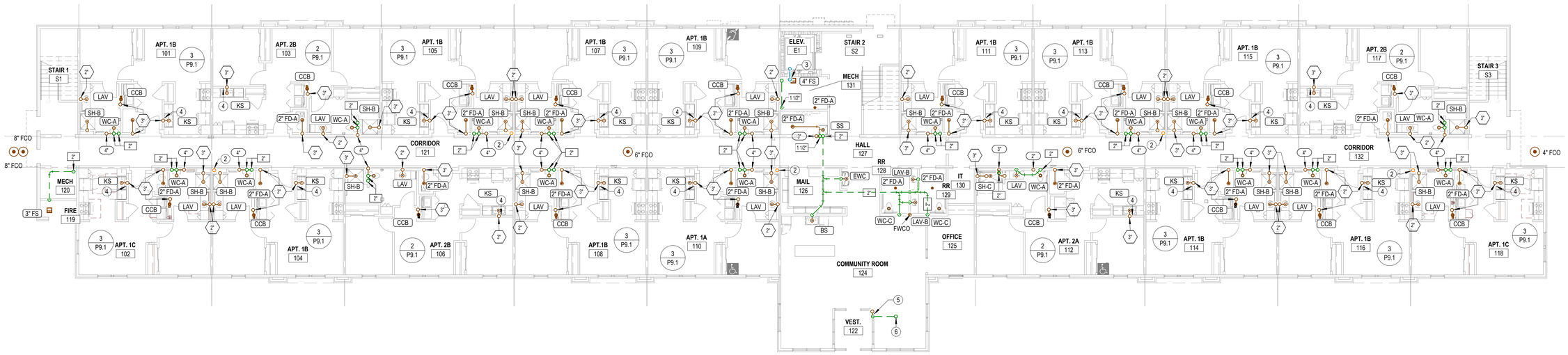

2 FIRST FLOOR-WASTE AND VENT PLAN

3/32" = 1'-0"

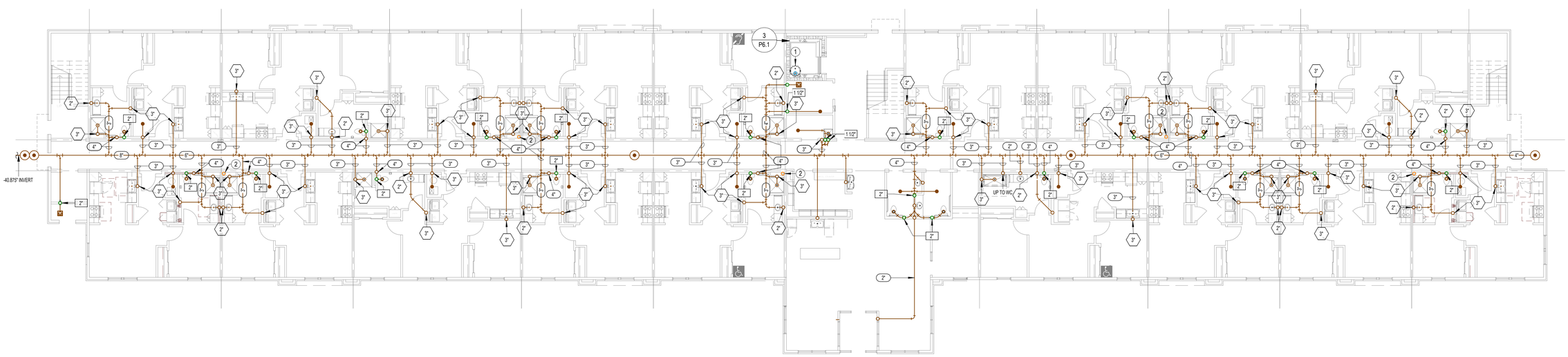

1 UNDERFLOOR-WASTE AND VENT PLAN

3/32" = 1'-0"

JonesGillamRenz
730 N. Ninth
Salina, KS 67401
785.827.0386
1881 Main Street, Suite 301
Kansas City, MO 64108
jgr@jgrarchitects.com

THE RESIDENCE AT CARTER LAKE

NEW SENIOR LIVING FACILITY

CARTER LAKE, IOWA

LICENSED PROFESSIONAL ENGINEER
TIMOTHY C. TREDWAY
21578
IOWA
08/01/2025

REVISIONS:

DATE: 8-1-2025
JOB: 25-3489
SHEET NO.:

P1.1

COPYRIGHTED ©

LST Consulting Engineers, PA
MANHATTAN
4809 Vue Du Lac Place, Suite 201
Manhattan, KS 66503
785.587.8042
WICHITA
125 S. Washington, Suite 150
Wichita, KS 67202
316.285.0696
www.LSTengineers.com
mail@LSTengineers.com

Project 25039 **8-1-2025**

PLUMBING SIZING SYMBOLS	
(X")	DRAIN (X = SIZE)
X"	VENT (X = SIZE)
(X")	WASTE STACK VENT (X = SIZE)

NOTES BY SYMBOL

1. 4" PVC PIPE FOR RADON SYSTEM. COORDINATE EXACT REQUIREMENTS WITH ARCHITECT.
2. PROVIDE INDIRECT CONNECTION AT GARBAGE DISPOSER AND CONNECT DISHWASHER. ROUTE DRAIN FROM DISHWASHER AT BACK OF CABINETRY. COORDINATE EXACT ROUTING WITH G.C.

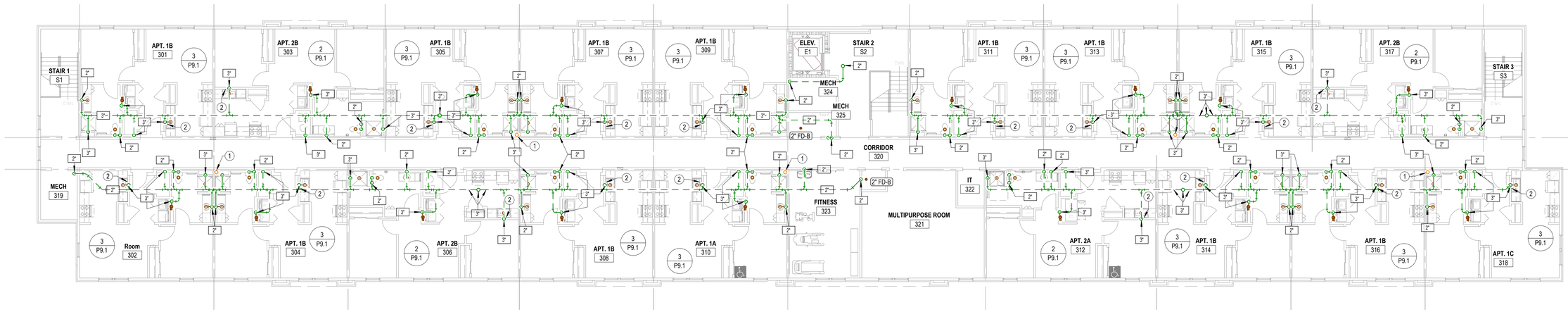

2 THIRD FLOOR-WASTE AND VENT PLAN

3/32" = 1'-0"

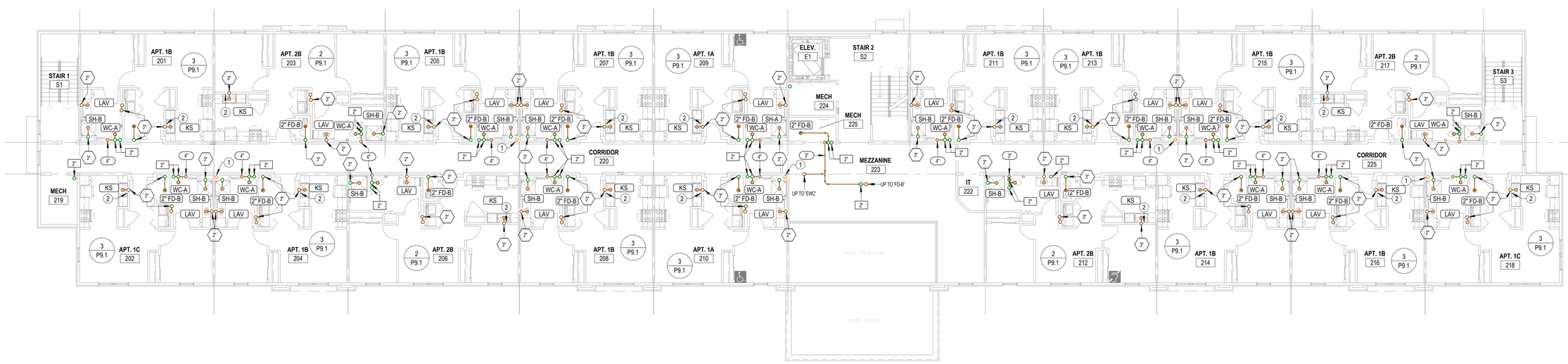

1 SECOND FLOOR-WASTE AND VENT PLAN

3/32" = 1'-0"

JonesGillamRenz
730 N. Ninth
Salina, KS 67401
785.827.0386
1881 Main Street, Suite 301
Kansas City, MO 64108
jgr@jgrarchitects.com

THE RESIDENCE AT CARTER LAKE

NEW SENIOR LIVING FACILITY

CARTER LAKE, IOWA

LICENSED PROFESSIONAL ENGINEER
TIMOTHY C. TREDWAY
21578
IOWA
08/01/2025

REVISIONS:

DATE: 8-1-2025
JOB: 25-3489
SHEET NO.:

P1.2

COPYRIGHTED ©

	ALTERNATE MATERIAL SIZE	
	Cross-linked polyethylene (PEX)	Polypropylene
COPPER PIPE SIZE INDICATED 1/2"	1/2"	1/2"
3/4"	3/4"	3/4"
1"	1-1/4"	1-1/4"
1-1/4"	1-1/2"	1-1/2"
1-1/2"	2"	2"
2"	2-1/2"	2-1/2"
2-1/2"	3"	3"
3"	3-1/2"	3-1/2"

Note: Pipe sizes indicated on drawings are for Type L copper pipe. If alternate materials are used, sizes shall be as indicated above. Where no pipe size is shown, use of indicated material in design pipe size is prohibited. Do not use materials other than those listed.

LST Consulting Engineers, PA

MANHATTAN
4809 Vue Du Lac Place, Suite 201
Manhattan, KS 66503
785.587.8042

WICHITA
125 S. Washington, Suite 150
Wichita, KS 67202
316.265.0696

www.LSTengineers.com
mail@LSTengineers.com

Project 25039

8-1-2025

NOTES BY SYMBOL

1. PROVIDE SHUT OFF VAVLE AT WATER SERVICE ENTRANCE WITH PRESSURE REDUCING VALVE SET TO 80PSI IF REQUIRED. COORDINATE REQUIREMENTS WITH CITY OF CARTER LAKE.
2. FIRE PROTECTION SERVICE ENTRANCE. INSTALL IN ACCORDANCE WITH NFPA 13. COORDINATE LOCATION OF ALL VALVES AND APPURTENANCES WITH AHJ. SEE 4.P6.1 FOR MORE INFORMATION.
3. SEE ENLARGED DOMESTIC WATER PLANS FOR CONTINUATION.
4. PROVIDE 1" WATER SERVICE TO APARTMENT WITH SHUT-OFF VALVE, SEE DOMESTIC RISER DIAGRAMS FOR ADDITIONAL INFORMATION.
5. INSTALL 2" METER WITH LOCKABLE BYPASS AND 2-1/2" BACKFLOW PREVENTER PER CITY REQUIREMENTS, COORDINATE REQUIREMENTS WITH AHJ AND PAY ALL FEES.

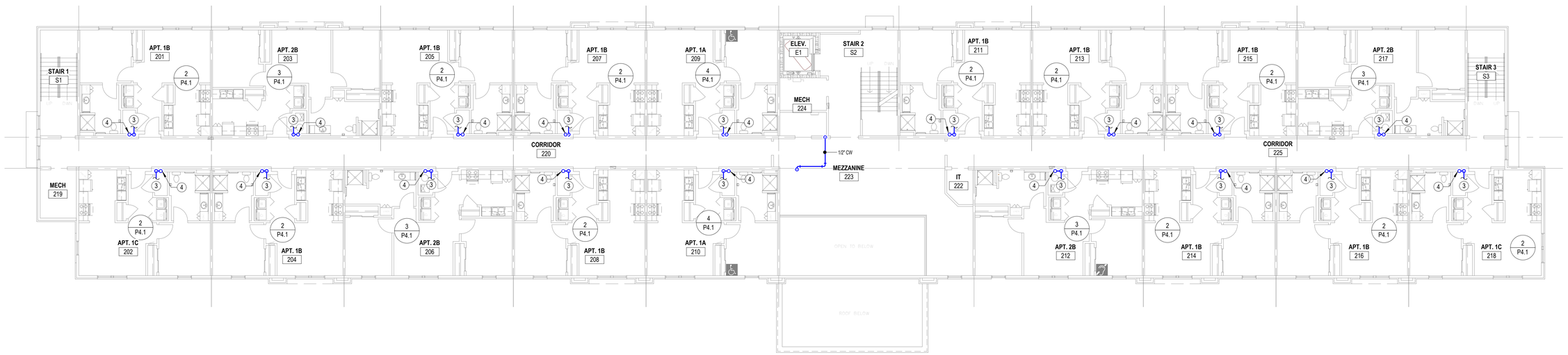

2 SECOND FLOOR-DOMESTIC WATER PLAN

3/32" = 1'-0"

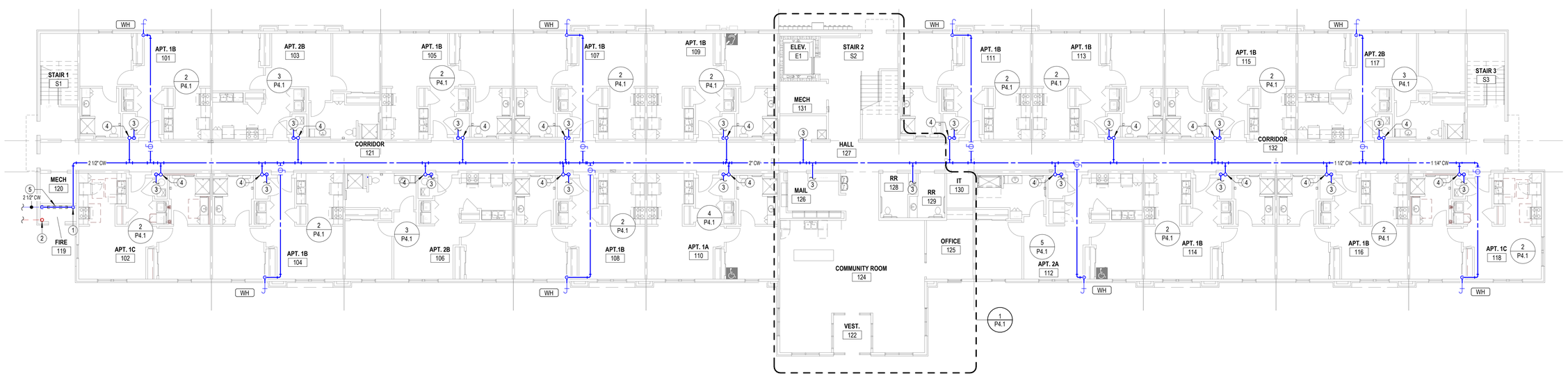

1 FIRST FLOOR-DOMESTIC WATER PLAN

3/32" = 1'-0"

JonesGillamRenz
730 N. Ninth
Salina, KS 67401
785.827.0386
1881 Main Street, Suite 301
Kansas City, MO 64108
jgr@jgrarchitects.com

THE RESIDENCE AT CARTER LAKE

NEW SENIOR LIVING FACILITY

CARTER LAKE, IOWA

LICENSED PROFESSIONAL ENGINEER
TIMOTHY C. TREDWAY
21578
IOWA
08/01/2025

REVISIONS:

DATE: 8-1-2025
JOB: 25-3489
SHEET NO.:

P1.3

COPYRIGHTED ©

		ALTERNATE MATERIAL SIZE	
		Cross-linked polyethylene (PEX)	Polypropylene
COPPER PIPE SIZE INDICATED	1/2"	1/2"	1/2"
	3/4"	3/4"	3/4"
	1"	1-1/4"	1-1/4"
	1-1/4"	1-1/2"	1-1/2"
	1-1/2"	2"	2"
	2"	2-1/2"	2-1/2"
	2-1/2"	3"	3"
	3"	3-1/2"	3-1/2"

Note: Pipe sizes indicated on drawings are for Type L copper pipe. If alternate materials are used, sizes shall be as indicated above. Where no pipe size is shown, use of indicated material in design pipe size is prohibited. Do not use materials other than those listed.

LST Consulting Engineers, PA

MANHATTAN
4809 Vue Du Lac Place, Suite 201
Manhattan, KS 66503
785.587.8042

WICHITA
125 S. Washington, Suite 150
Wichita, KS 67202
316.285.0696

www.LSTengineers.com
mail@LSTengineers.com

Project 25039

8-1-2025

GENERAL NOTES:
1. PIPING FOR DWELLING UNITS ON 3RD FLOOR SHALL BE ROUTED BELOW THE FLOOR. DO NOT ROUTE DOMESTIC WATER PIPING IN THE ATTIC.

NOTES BY SYMBOL

1 SEE ENLARGED DOMESTIC WATER PLANS FOR CONTINUATION.
2 PROVIDE 1" WATER SERVICE TO APARTMENT WITH SHUT-OFF VALVE, SEE DOMESTIC RISER DIAGRAMS FOR ADDITIONAL INFORMATION.

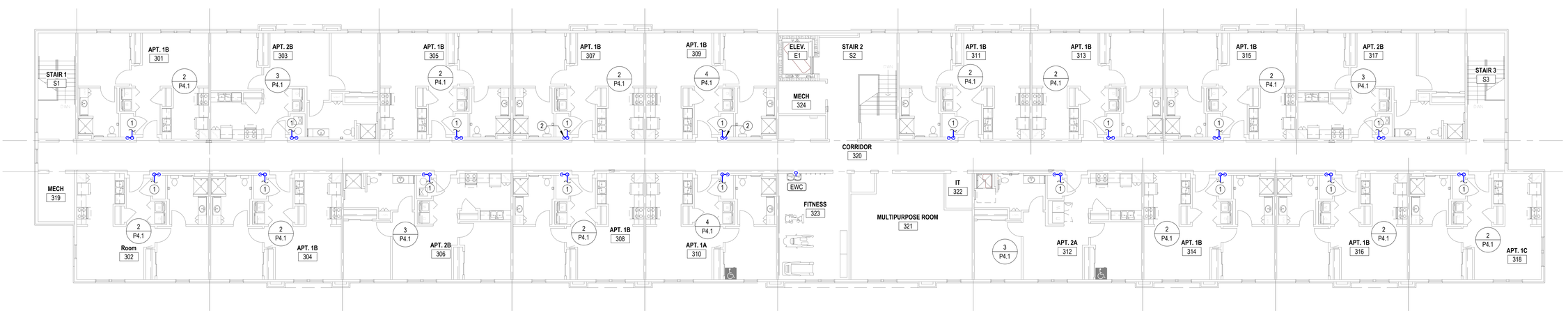

1 THIRD FLOOR-DOMESTIC WATER PLAN

3/32" = 1'-0"

JonesGillamRenz
730 N. Ninth
Salina, KS 67401
785.827.0386
1881 Main Street, Suite 301
Kansas City, MO 64108
jgr@jgrarchitects.com

THE RESIDENCE AT CARTER LAKE

NEW SENIOR LIVING FACILITY

CARTER LAKE, IOWA

LICENSED PROFESSIONAL ENGINEER
TIMOTHY C. TREDWAY
21578
IOWA
08/01/2025

REVISIONS:

DATE: 8-1-2025
JOB: 25-3489
SHEET NO.:

P1.4

COPYRIGHTED ©

ALTERNATE MATERIAL SIZE			
		Cross-linked polyethylene (PEX)	Polypropylene
COPPER PIPE SIZE INDICATED	1/2"	1/2"	1/2"
	3/4"	3/4"	3/4"
	1"	1-1/4"	1-1/4"
	1-1/4"	1-1/2"	1-1/2"
	1-1/2"	2"	2"
	2"	2-1/2"	2-1/2"
	2-1/2"	3"	3"
	3"	3-1/2"	3-1/2"

Note: Pipe sizes indicated on drawings are for Type L copper pipe. If alternate materials are used, sizes shall be as indicated above. Where no pipe size is shown, use of indicated material in design pipe size is prohibited. Do not use materials other than those listed.

LST Consulting Engineers, PA

MANHATTAN
4809 Vue Du Lac Place, Suite 201
Manhattan, KS 66503
785.587.8042

WICHITA
125 S. Washington, Suite 150
Wichita, KS 67202
316.285.0696

www.LSTengineers.com
mail@LSTengineers.com

Project 25039 8-1-2025

GENERAL NOTES:
1. PIPING FOR DWELLING UNITS ON 3RD FLOOR SHALL BE ROUTED BELOW THE FLOOR. DO NOT ROUTE DOMESTIC WATER PIPING IN THE ATTIC.
2. REFERENCE OVERALL PLANS FOR EXACT FIXTURE TAGS.

NOTES BY SYMBOL

1. PROVIDE 1/2" VALVED BRANCH BELOW SINK AND CONNECT DISHWASHWER. ROUTE PIPING ALONG BACK OF CABINETRY, COORDINATE EXACT ROUTING WITH G.C. COORDINATE EXACT REQUIREMENTS WITH DISHWASHER PROVIDED.
2. SEE OVERALL DOMESTIC WATER PLANS FOR CONTINUATION.
3. PROVIDE 1" WATER SERVICE TO APARTMENT WITH SHUT-OFF VALVE, SEE DOMESTIC RISER DIAGRAMS FOR ADDITIONAL INFORMATION.
4. ELECTRICAL EQUIPMENT SHOWN FOR COORDINATION. DO NOT ROUTE PIPING ABOVE OR BELOW EQUIPMENT, AND MAINTAIN WORKING CLEARANCE SHOWN.
5. HOT WATER CIRCULATION LOOP SHALL DROP IN WALL TO LIMIT HOT WATER BRANCH TO PUBLIC LAVATORY TO 2 MAX.
6. COORDINATE ROUTING OF PIPING IN THIS AREA WITH STRUCTURE.

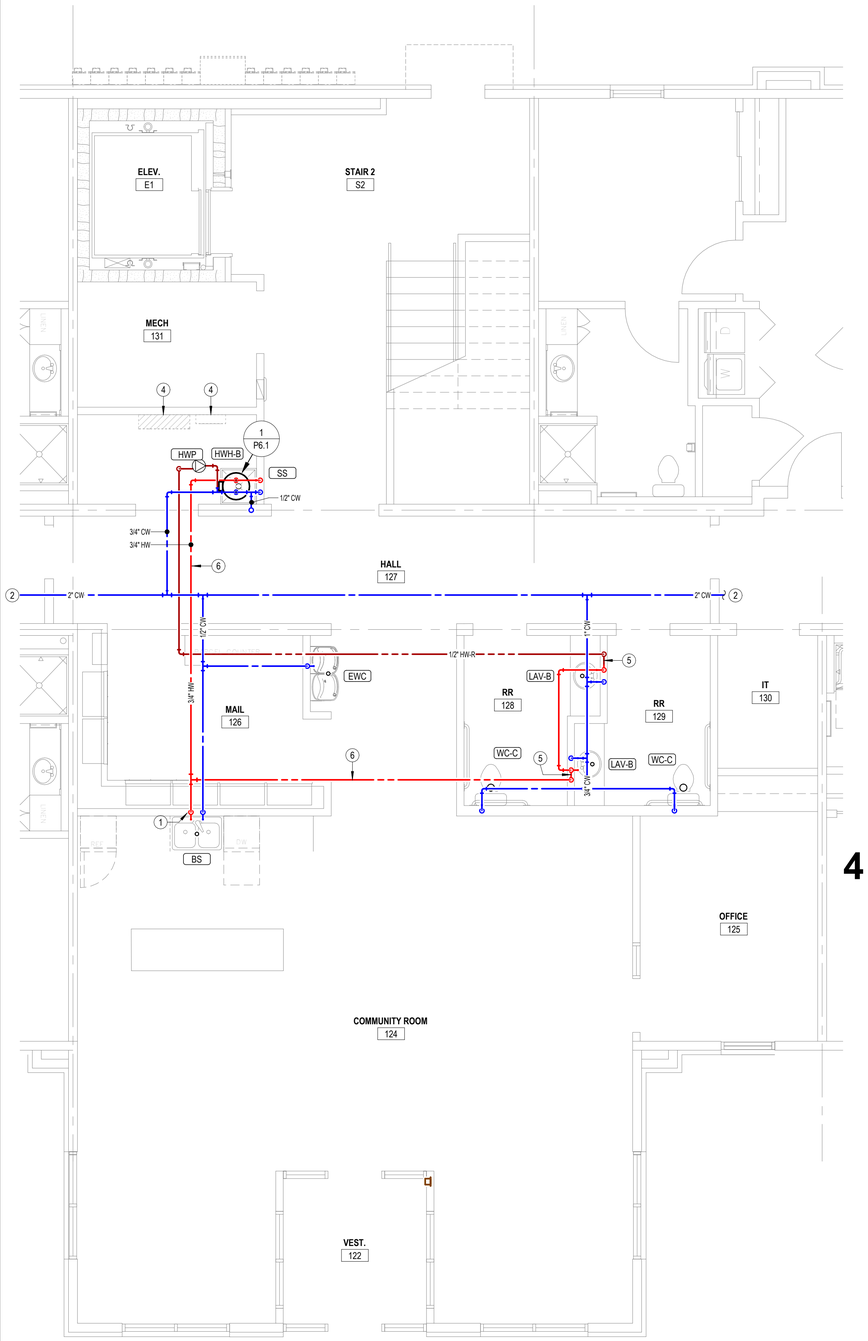

1 ENLARGED DOMESTIC WATER PLAN-COMMON AREA
1/4" = 1'-0"

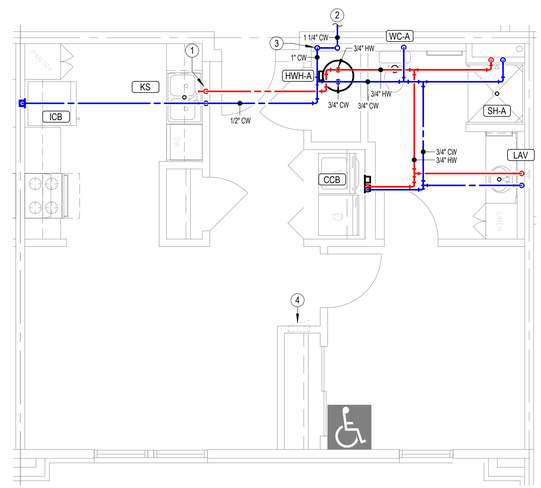

4 ENLARGED DOMESTIC WATER PLAN-1 BR ACCESSIBLE
1/4" = 1'-0"

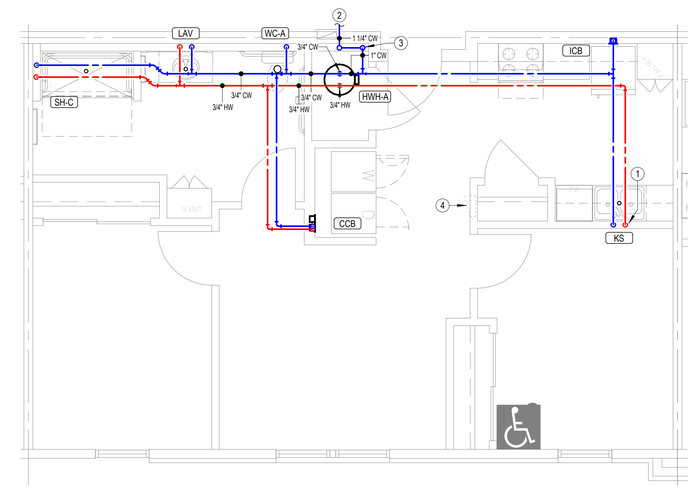

5 ENLARGED DOMESTIC WATER PLAN-2 BR ACCESSIBLE
1/4" = 1'-0"

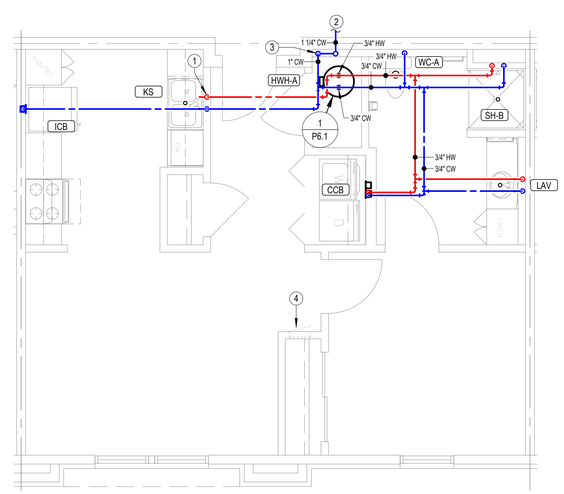

2 ENLARGED DOMESTIC WATER PLAN-1 BR
1/4" = 1'-0"

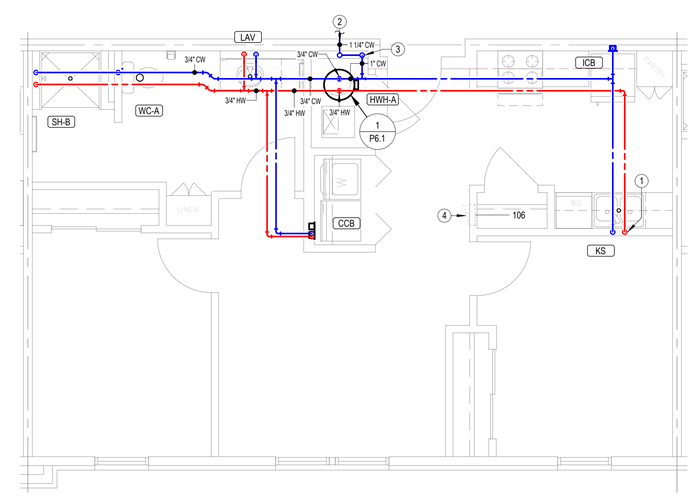

3 ENLARGED DOMESTIC WATER PLAN-2 BR
1/4" = 1'-0"

JonesGillamRenz
730 N. Ninth
Salina, KS 67401
785.827.0386
1881 Main Street, Suite 301
Kansas City, MO 64108
jgr@jgrarchitects.com

THE RESIDENCE AT CARTER LAKE
NEW SENIOR LIVING FACILITY

CARTER LAKE, IOWA

LICENSED PROFESSIONAL ENGINEER
TIMOTHY C. TREDWAY
21578
IOWA
08/01/2025

REVISIONS:

DATE: 8-1-2025
JOB: 25-3489
SHEET NO.:

P4.1

COPYRIGHTED ©

LST Consulting Engineers, PA
MANHATTAN
4809 Vue Du Lac Place, Suite 201
Manhattan, KS 66503
785.587.8042
WICHITA
125 S. Washington, Suite 150
Wichita, KS 67202
316.285.0696
www.LSTengineers.com
mail@LSTengineers.com

Project 25039 **8-1-2025**

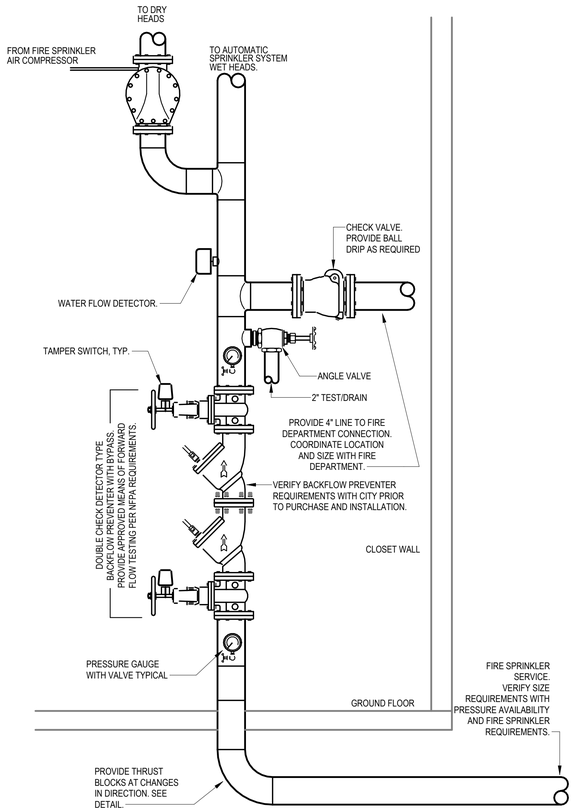

4 FIRE PROTECTION RISER DIAGRAM
NO SCALE

DOMESTIC WATER EQUIPMENT SCHEDULE

GENER... • PROVIDE FIXTURES WITH ALL TRIM NECESSARY FOR COMPLETE INSTALLATION.

NOTES: 1. PROVIDE WALL HUNG PLATFORM FOR WATER HEATER EQUAL TO HOLDRITE #60SWHP-W. COORDINATE EXACT LOCATION AND MOUNTING HEIGHT...
2. PUMP SHALL HAVE CONTROLS TO PREVENT STARTUP WITHIN 5 MINUTES FROM THE END OF THE PREVIOUS HEATING CYCLE. HOT WATER RECIRCULATION SYSTEM SHALL MEET ALL REQUIREMENTS OF THE 2015 IECC

MARK	MANUFACTURER	MODEL	DESCRIPTION	NOTES
HWH-A	AO Smith	EETU-40	40 GALLON ELECTRIC WATER HEATER. 0.93 UEF, 4500 WATTS, 208V HEATING ELEMENT, 21 GPH RECOVERY @ 90°F TEMP RISE. SUPPLIED WITH TEMPERATURE AND PRESSURE RELIEF VALVE AND BRASS DRAIN VALVE. WATER HEATER SHALL HAVE TEMPERATURE CONTROLS SET TO LIMIT SUPPLY TEMPERATURE TO 120°F OR LESS.	---
HWH-B	AO Smith	EJCS-20	20 Gallon electric water heater, 2500 watts, 120v heating element, 11 GPH recovery @ 90°F temp rise. Supplied with temperature and pressure relief valve and brass drain valve. Water heater shall have temperature controls set to limit supply temperature to 120°F or less.	1
HWP	Bell & Gossett	NBF-33	Circulation pump, bronze body, 10 gpm @ 10' head, 120 VAC. Provide clamp-on aquastat for pump control.	2

PLUMBING FIXTURE SCHEDULE

GENERAL:
- PROVIDE FIXTURES WITH ALL TRIM NECESSARY FOR COMPLETE INSTALLATION.
- VENT SIZES ARE APPLICABLE ONLY FOR INDIVIDUAL FIXTURE VENTS WHERE ALTERNATE VENTING METHOD HAS NOT BEEN INDICATED ON PLANS.
- PROVIDE 1/4 TURN STOP VALVES ON ALL HOT AND COLD WATER SUPPLY LINE CONNECTIONS FOR FIXTURES. SHOWER VALVES SHALL HAVE INTEGRAL STOP VALVES.
- PROVIDE FLOOR DRAINS AND FLOOR SINKS WITH TRAP PRIMER OR TRAP PRIMER ALTERNATIVE EQUIVALENT TO PROVENT TRAP GUARD. PROVIDE AUTOMATIC TRAP PRIMER DEVICE WITH SINGLE OR MULTIPLE OUTLET PIPES AND ROUTE DRAINS TO PRIMER PORTS.

MARK	MANUFACTURER	MODEL	PRODUCT DESCRIPTION	TRIM	ROUGH-IN SIZES			COLD	HOT	ADA COMPLIANT	NOTES
					DRAIN	VENT	WATER				
BS	BLANCO	443047	SINGLE COMPARTMENT 18 GA STAINLESS STEEL SINK, UNDERMOUNT, 23"X16"X5-1/2"D BOWL.	DELTA MODEL 19802Z-SP-DST SINGLE HANDLE KITCHEN SINK FAUCET WITH PULL DOWN HOSE SPRAY. STAINLESS FINISH. PROVIDE BASKET STRAINER.	2"	1 1/2"	1/2"	Yes	Yes	Yes	
CCB	SIOUX CHIEF	696-2313	RECESSED WASHING MACHINE BOX WITH 2"PVC/ABS DRAIN COUPLING AND KNOCKOUT TEST CAP. TWO 1/4 TURN BALL VALVES WITH HAMMER ARRESTORS.		2"	1 1/2"	1/2"	Yes	Yes		
DB	SIOUX CHIEF	696-3	DRAINAGE BOX BOX WITH 2" DRAIN CONNECTION AND SOLID COVER.		2"	1 1/2"	0"	No	No		
EWC	MURDOCK	A172100F-UG-BF12	DUAL LEVEL SELF-CONTAINED WATER COOLER WITH STAINLESS STEEL BASIN, FRONT PUSH BUTTON ACTUATORS, SENSOR OPERATED BOTTLER FILLER, LEAD-FREE COOLING SYSTEM, 120 VOLTS.		2"	1 1/2"	1/2"	Yes	No	Yes	
FD-A	WATTS	FD-100-A	EPOXY COATED CAST IRON FLOOR DRAIN WITH ANCHOR FLANGE, REVERSIBLE CLAMPING COLLAR WITH PRIMARY AND SECONDARY WEEPHOLES, ADJUSTABLE ROUND HEEL PROOF NICKEL BRONZE STRAINER.	TRAP PROTECTION DEVICE EQUIVALENT TO PROSET TRAPGUARD	2"	2"					
FD-B	WATTS	FD-100-A	EPOXY COATED CAST IRON FLOOR DRAIN WITH ANCHOR FLANGE, REVERSIBLE CLAMPING COLLAR WITH PRIMARY AND SECONDARY WEEPHOLES, ADJUSTABLE ROUND HEEL PROOF NICKEL BRONZE STRAINER.	TRAP PROTECTION DEVICE EQUIVALENT TO PROSET TRAPGUARD	2"	2"					
FS	WATTS	FS-740	12" SQUARE, 8" DEEP FLOOR SINK WITH WHITE PORCELAIN ENAMEL COATED INTERIOR, LOOSE SET PORCELAIN ENAMEL COATED CAST IRON GRATE, ALUMINUM DOME BOTTOM STRAINER.	TRAP PROTECTION DEVICE EQUIVALENT TO PROSET TRAP GUARD	<varies>	2"					
ICB	SIOUX CHIEF	696-G1010	ICE MAKER CONNECTION BOX WITH 1/4 TURN BALL VALVE AND INTEGRAL HAMMER ARRESTOR.		0"	0"	1/2"	Yes	No		
KS	JUST	DLADA1829A65-J	TWO COMPARTMENT 18 GA STAINLESS STEEL SINK, SELF RIMMING, (2) 12"X12"X6-3/8"D BOWLS, FULLY UNDERCOATED, FAUCET HOLES AS REQ.	DELTA MODEL 19802Z-SP-DST SINGLE HANDLE KITCHEN SINK FAUCET WITH PULL DOWN SPRAYER. STAINLESS FINISH. PROVIDE BASKET STRAINER.	2"	1 1/2"	1/2"	Yes	Yes	Yes	
LAV	AMERICAN STANDARD	0610.000.020	UNDERMOUNT LAVATORY, WHITE VITREOUS CHINA, 20"W X 17".	DELTA MODEL 559H-559HAR-SS-DST SINGLE HANDLE FAUCET, STAINLESS FINISH. LEONARD MODEL TM-1 POINT OF USE MIXING VALVE. PROVIDE GRID DRAIN.	2"	1 1/2"	1/2"	Yes	Yes	Yes	
LAV-B	AMERICAN STANDARD	0610.000.020	UNDERMOUNT LAVATORY, WHITE VITREOUS CHINA, 20"W X 17".	MOEN MODEL 84774BL SINGLE HANDLE FAUCET, BLACK FINISH. LEONARD MODEL TM-1 POINT OF USE MIXING VALVE. PROVIDE GRID DRAIN.	2"	1 1/2"	1/2"	Yes	Yes	Yes	
SH-A	TBD	ADD MODEL NUMBER	EDIT DESCRIPTION: ONE-PIECE ACRYLIC SHOWER, 36"X33.5"X84", WITH MOLDED SOAP SHELF, RIGHT OR LEFT HAND ROUGH-IN AS REQUIRED. PROVIDE WITH BRASS DRAIN WITH CHROME STRAINER.	EDIT DESCRIPTION: DELTA MODEL R10000-UNWS/T13H132 PRESSURE BALANCING VALVE WITH INTEGRAL TEMPERATURE LIMITS, SINGLE METAL LEVER HANDLE, WITH 1.5 GPM SHOWER HEAD AND ARM.	2"	1 1/2"	1/2"	Yes	Yes	No	
SH-B	TBD	ADD MODEL NUMBER	EDIT DESCRIPTION: ONE-PIECE ACRYLIC SHOWER, 36"X33.5"X84", WITH MOLDED SOAP SHELF, RIGHT OR LEFT HAND ROUGH-IN AS REQUIRED. PROVIDE WITH BRASS DRAIN WITH CHROME STRAINER.	EDIT DESCRIPTION: DELTA MODEL R10000-UNWS/T13H132 PRESSURE BALANCING VALVE WITH INTEGRAL TEMPERATURE LIMITS, SINGLE METAL LEVER HANDLE, WITH 1.5 GPM SHOWER HEAD AND ARM.	2"	1 1/2"	1/2"	Yes	Yes	No	
SH-C	TBD	ADD MODEL NUMBER	EDIT DESCRIPTION: ONE-PIECE ACRYLIC SHOWER, 36"X33.5"X84", WITH MOLDED SOAP SHELF, RIGHT OR LEFT HAND ROUGH-IN AS REQUIRED. PROVIDE WITH BRASS DRAIN WITH CHROME STRAINER.	EDIT DESCRIPTION: DELTA MODEL R10000-UNWS/T13H132 PRESSURE BALANCING VALVE WITH INTEGRAL TEMPERATURE LIMITS, SINGLE METAL LEVER HANDLE, WITH 1.5 GPM SHOWER HEAD AND ARM.	2"	1 1/2"	1/2"	Yes	Yes	No	
SS	FIAT	MSB-2424	ONE PIECE MOLDED STONE MOP BASIN, 24" SQUARE, STAINLESS STEEL INTEGRAL DRAIN BODY WITH CAULK CONNECTION, STAINLESS STEEL WALL GUARDS.	CHICAGO FAUCET MODEL 897-CPP FAUCET WITH HOSE THREAD OUTLET, VACUUM BREAKER SPOUT, PAIL HOOK, WALL BRACE, INTEGRAL CHECK VALVES, METAL LEVER HANDLES.	3"	1 1/2"	3/4"	Yes	Yes	No	
WC-A	AMERICAN STANDARD	215AA.104	FLUSH TANK WATER CLOSET, WHITE VITREOUS CHINA, 3" FLUSH VALVE, 12" ROUGH-IN, ELONGATED 16-1/2" HIGH BOWL.	WHITE OPEN FRONT SOFT CLOSE PLASTIC SEAT	4"	2"	1/2"	Yes	No	Yes	
WC-B	AMERICAN STANDARD	215AA.104	FLUSH TANK WATER CLOSET, WHITE VITREOUS CHINA, 3" FLUSH VALVE, 12" ROUGH-IN, ELONGATED 16-1/2" HIGH BOWL.	WHITE OPEN FRONT SOFT CLOSE PLASTIC SEAT	3"	2"	1/2"	Yes	No	Yes	
WC-C	AMERICAN STANDARD	215AA.104	FLUSH TANK WATER CLOSET, WHITE VITREOUS CHINA, 3" FLUSH VALVE, 12" ROUGH-IN, ELONGATED 16-1/2" HIGH BOWL.	WHITE OPEN FRONT SOFT CLOSE PLASTIC SEAT	4"	2"	1/2"	Yes	No	Yes	
WH	WOODFORD	B67	AUTOMATIC DRAINING FREEZELESS WALL HYDRANT WITH ASSE 1052 DOUBLE CHECK BACKFLOW PREVENTOR, LOOSE TEE KEY HANDLE, WITH RECESSED BOX WITH DOOR. PROVIDE WITH CHROME PLATED EXTERIOR FINISH.				3/4"	Yes	No	No	

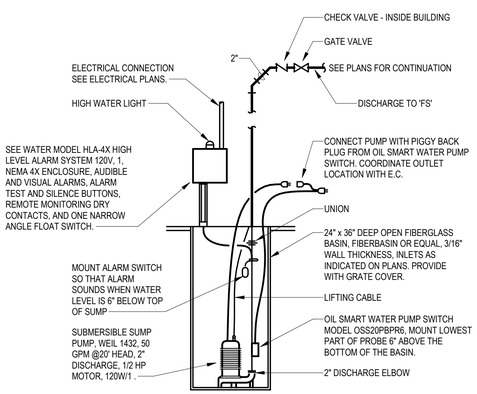

SUMP PUMP WITH OIL SMART SWITCH AND SEE WATER ALARM SYSTEM

3 ELEVATOR SUMP PUMP DIAGRAM
NO SCALE

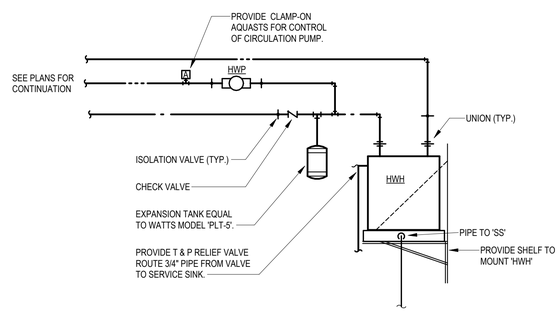

2 WATER HEATER ON SHELF PIPING DIAGRAM
NO SCALE

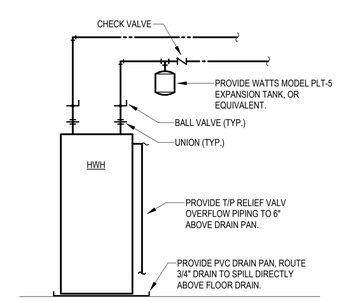

1 APARTMENT WATER HEATER DIAGRAM
12" = 1'-0"

JonesGillamRenz
730 N. Ninth
Salina, KS 67401
785.827.0386
1881 Main Street, Suite 301
Kansas City, MO 64108
jgr@jgrarchitects.com

THE RESIDENCE AT CARTER LAKE
NEW SENIOR LIVING FACILITY
CARTER LAKE, IOWA

LICENSED PROFESSIONAL ENGINEER
TIMOTHY C. TREADWAY
21578
IOWA
08/01/2025

REVISIONS:

DATE: 8-1-2025
JOB: 25-3489
SHEET NO.:

P6.1

COPYRIGHTED ©

LST Consulting Engineers, PA
MANHATTAN
4809 Vue Du Lac Place, Suite 201
Manhattan, KS 66503
785.587.8042
WICHITA
125 S. Washington, Suite 150
Wichita, KS 67202
316.285.0696
www.LSTengineers.com
mail@LSTengineers.com

Project 25039 **8-1-2025**

GENERAL NOTES:
1. REFERENCE OVERALL PLANS FOR EXACT FIXTURE TAGS.

NOTES BY SYMBOL

1	SEE OVERALL PLANS FOR SIZE AND ROUTING OF PLUMBING MAINS.
2	DOMESTIC SERVICE TO 1ST FLOOR DWELLING UNIT. SEE P4.1 FOR CONTINUATION.
3	DOMESTIC SERVICE TO 2ND FLOOR DWELLING UNIT. SEE P4.1 FOR CONTINUATION.
4	DOMESTIC SERVICE TO 3RD FLOOR DWELLING UNIT. SEE P4.1 FOR CONTINUATION.
5	SANITARY VENTING. SEE P1.2 FOR CONTINUATION AND SIZES.

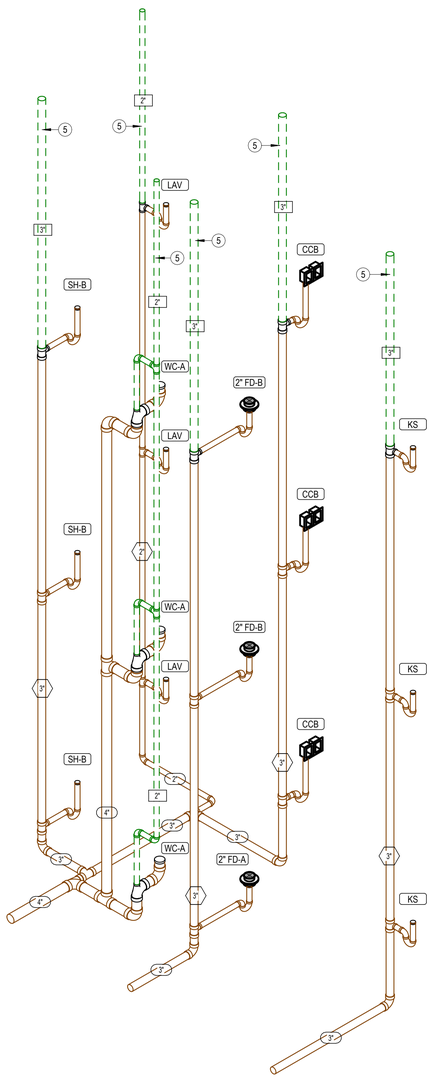

3 **TYPICAL 1 BEDROOM WASTE AND VENT RISER**

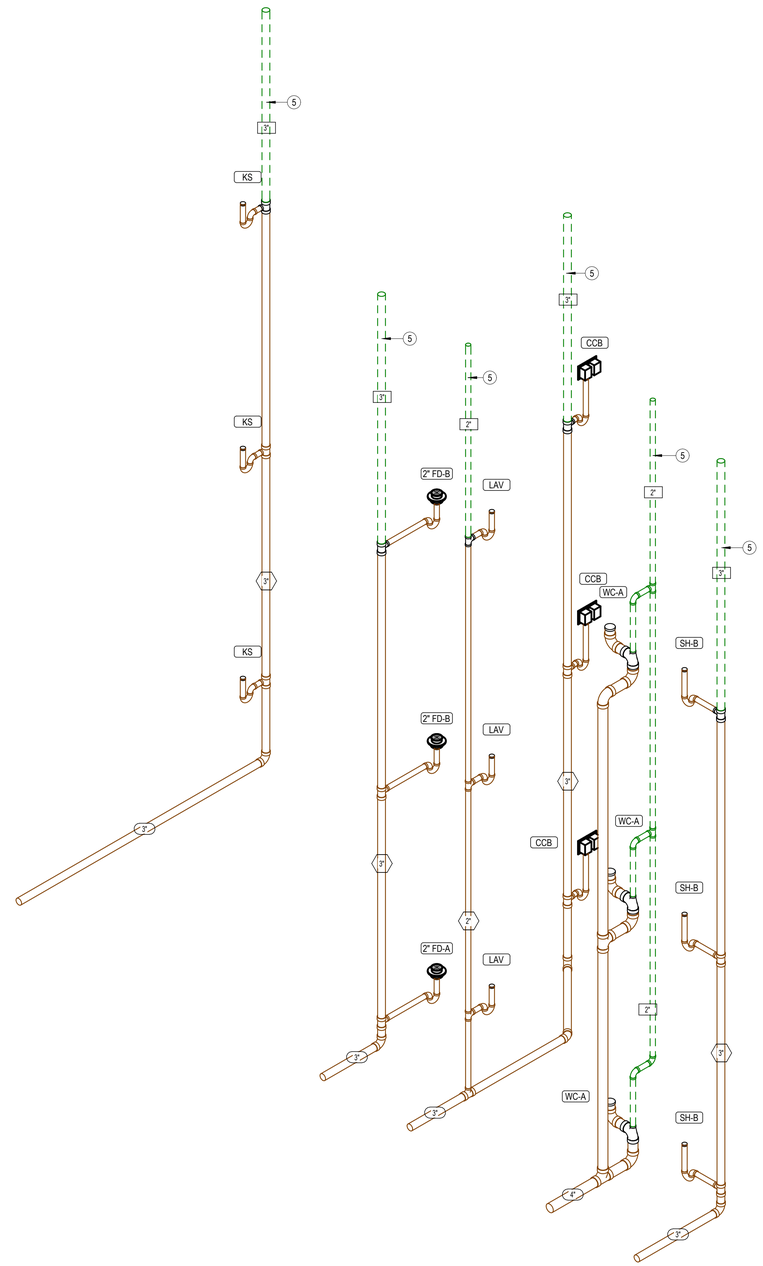

2 **TYPICAL 2 BEDROOM WASTE AND VENT RISER**

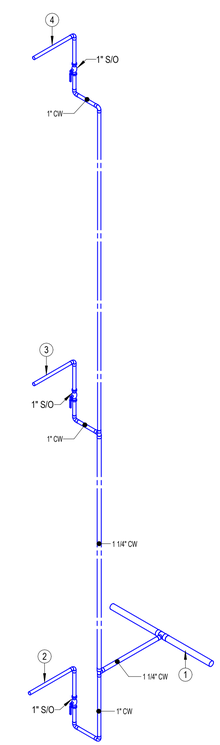

1 **TYPICAL APARTMENT DOMESTIC WATER SERVICE RISER DIAGRAM**

JonesGillamRenz
730 N. Ninth
Salina, KS 67401
785.827.0386
1881 Main Street, Suite 301
Kansas City, MO 64108
jgr@jgrarchitects.com

THE RESIDENCE AT CARTER LAKE

NEW SENIOR LIVING FACILITY

CARTER LAKE, IOWA

LICENSED PROFESSIONAL ENGINEER
TIMOTHY C. TREMWAY
21578
IOWA
08/01/2025

REVISIONS:

DATE: 8-1-2025
JOB: 25-3489
SHEET NO.:

P9.1

COPYRIGHTED ©